TEAR SHEET

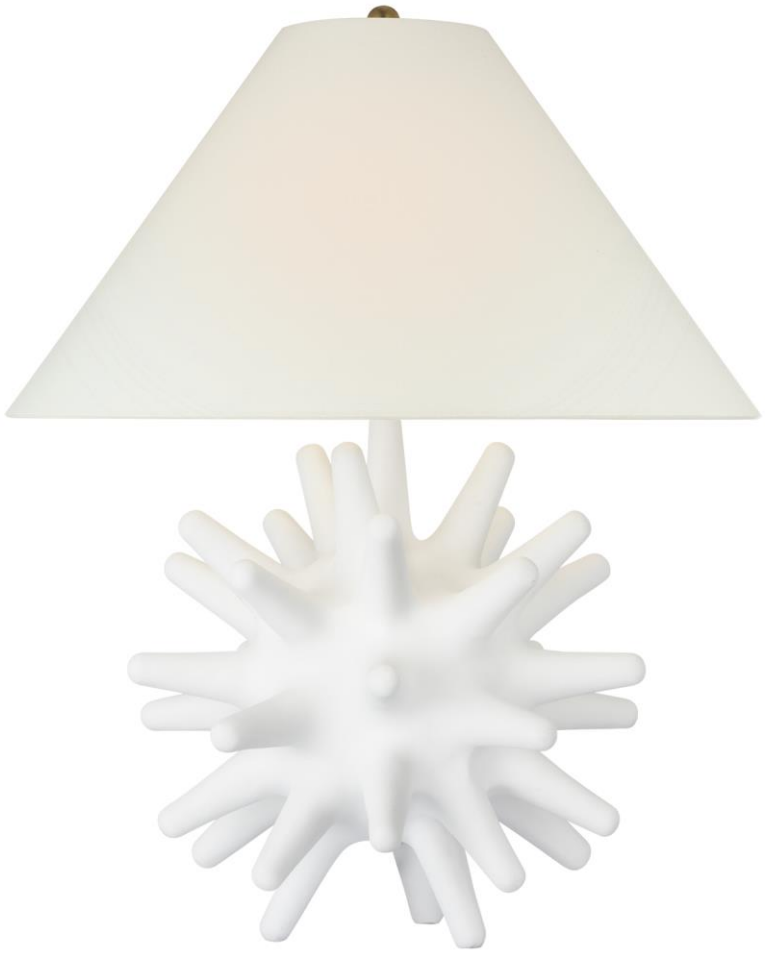

Nerina 26" Table Lamp

Item # CHA 8672PW-L

Designer: Chapman & Myers

Height: 26"
Width: 21.5"
Base: 6.5" Decorative
Finishes: GDL, PW, SVL
Shade Treatments: L
Shade Details: 6" x 21.5" x 13.5"
Socket: E26 Dimmer
Wattage: 15 LED A19
Weight: 28 Pounds
Note: 120V Configuration Only

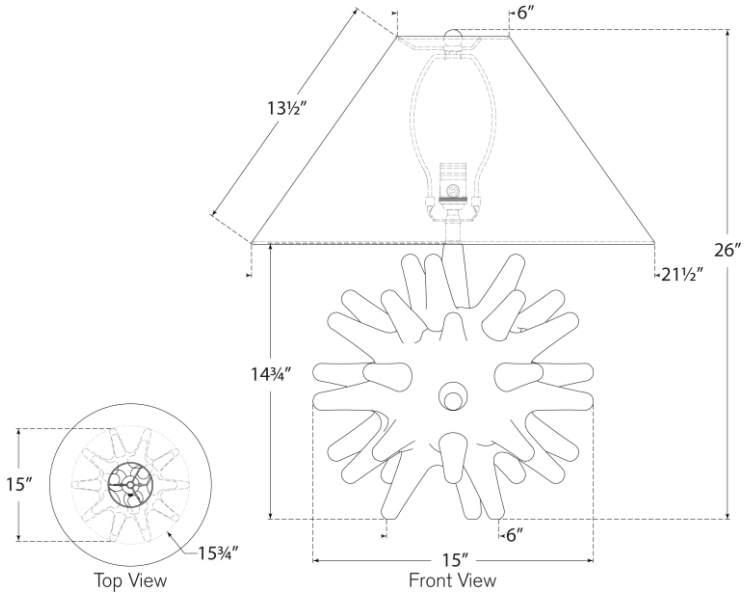

VISUAL COMFORT & CO.