Rain Showers

ROUND

Designed by

RICHARD ROGERS & LUIS VIDAL

Description

- 8"
- Rain shower head
- With ball joint
- Flow limiter 1.75gpm @ 80psi

Finish

chrome
100064923

Other Finishes

black
100225023

titanium
100285157

copper
100285195

brushed copper
100285799

brushed titanium
100285839

Certifications and quality characteristiques

Meets CALGreen standards

C US

MASS

Flow rate diagramme

Pressure (psi)	**0**	**7.25**	**14.5**	**29.01**	**43.51**	**58.02**	**72.52**
Flow - gpm (±15%)	0	1.45	1.9	2.19	2.22	2.35	2.51

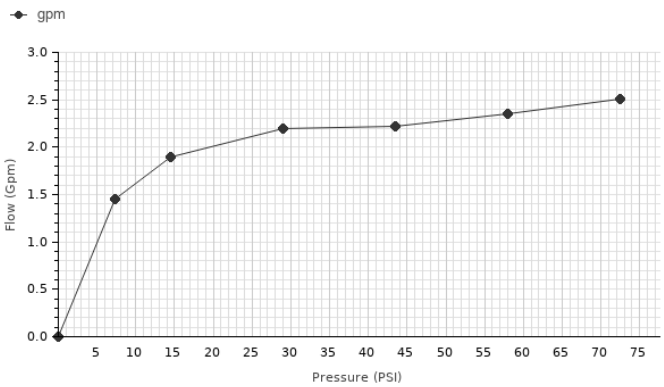

Technical drawing

Dimensions in inches

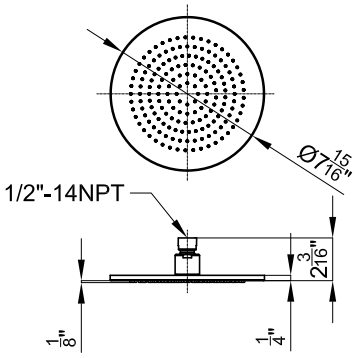

noken
PORCELANOSA BATHROOMS

Warranty:For a warranty or other information on this product, visit our Web address: www.noken.com

Legal disclaimer: All details provided by the NOKEN´s Product has an information purpose without any contractual value. In order to obtain further information about the materials and their installation please visit our showrooms. NOKEN reserves the right to modify or delete any information on this site. The images and colours shown in this site may differ from the real ones.

© 2022 noken | Edition: 29/12/2022 USA Ref.055042