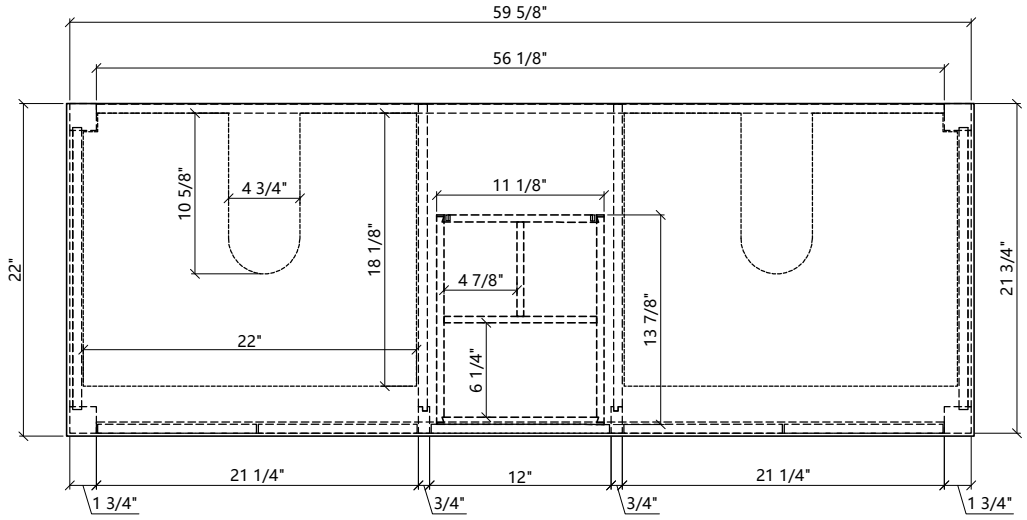
59 5/8"
56 1/8"
22"
10 5/8"
4 3/4"
18 1/8"
11 1/8"
4 7/8"
13 7/8"
6 1/4"
22"
21 3/4"
21 1/4"
12"
21 1/4"
1 3/4"
3/4"
3/4"
1 3/4"

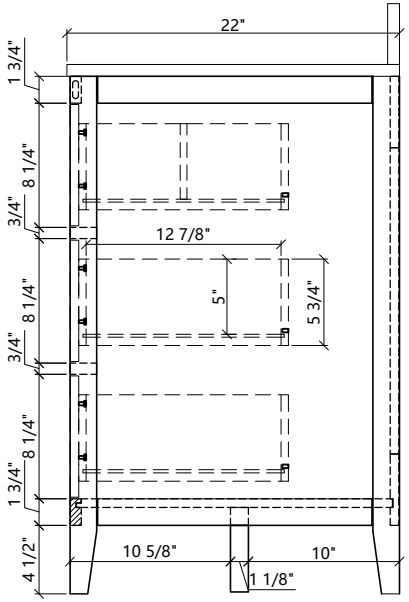
22"
1 3/4"
8 1/4"
3/4"
12 7/8"
5"
5 3/4"
8 1/4"
3/4"
8 1/4"
1 3/4"
4 1/2"
10 5/8"
10"
1 1/8"

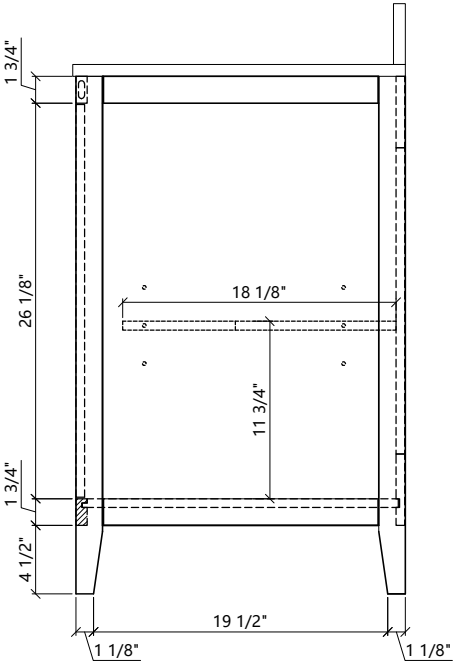
1 3/4"
26 1/8"
18 1/8"
11 3/4"
1 3/4"
4 1/2"
19 1/2"
1 1/8"
1 1/8"

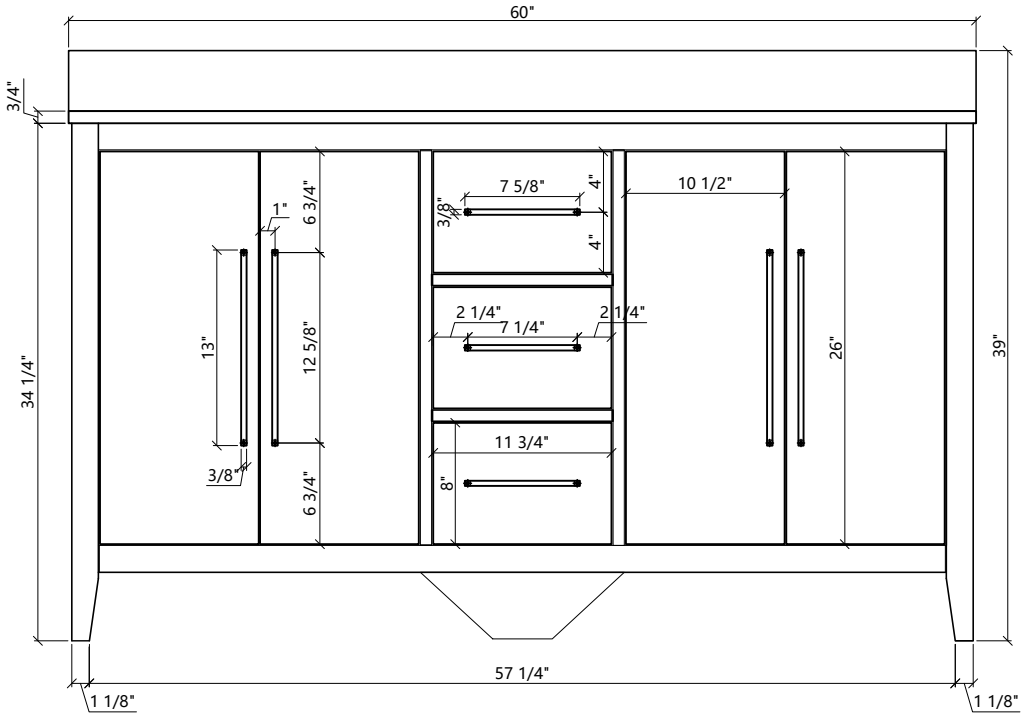
60"
3/4"
1"
6 3/4"
7 5/8"
4"
3/8"
4"
10 1/2"
13"
12 5/8"
2 1/4"
7 1/4"
2 1/4"
26"
39"
34 1/4"
11 3/4"
3/8"
6 3/4"
8"
57 1/4"
1 1/8"
1 1/8"

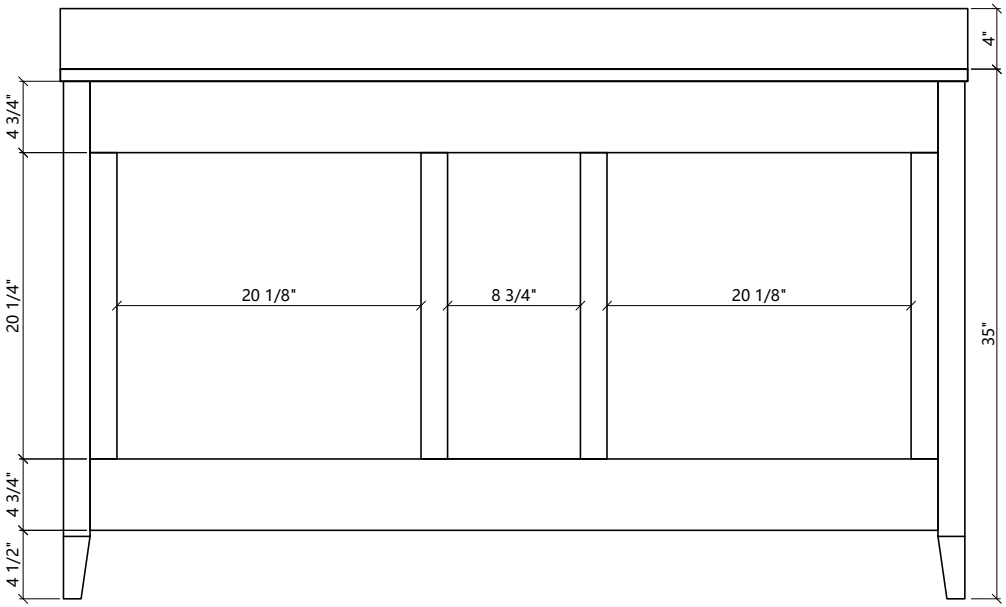
4"
4 3/4"
20 1/4"
20 1/8"
8 3/4"
20 1/8"
35"
4 3/4"
4 1/2"

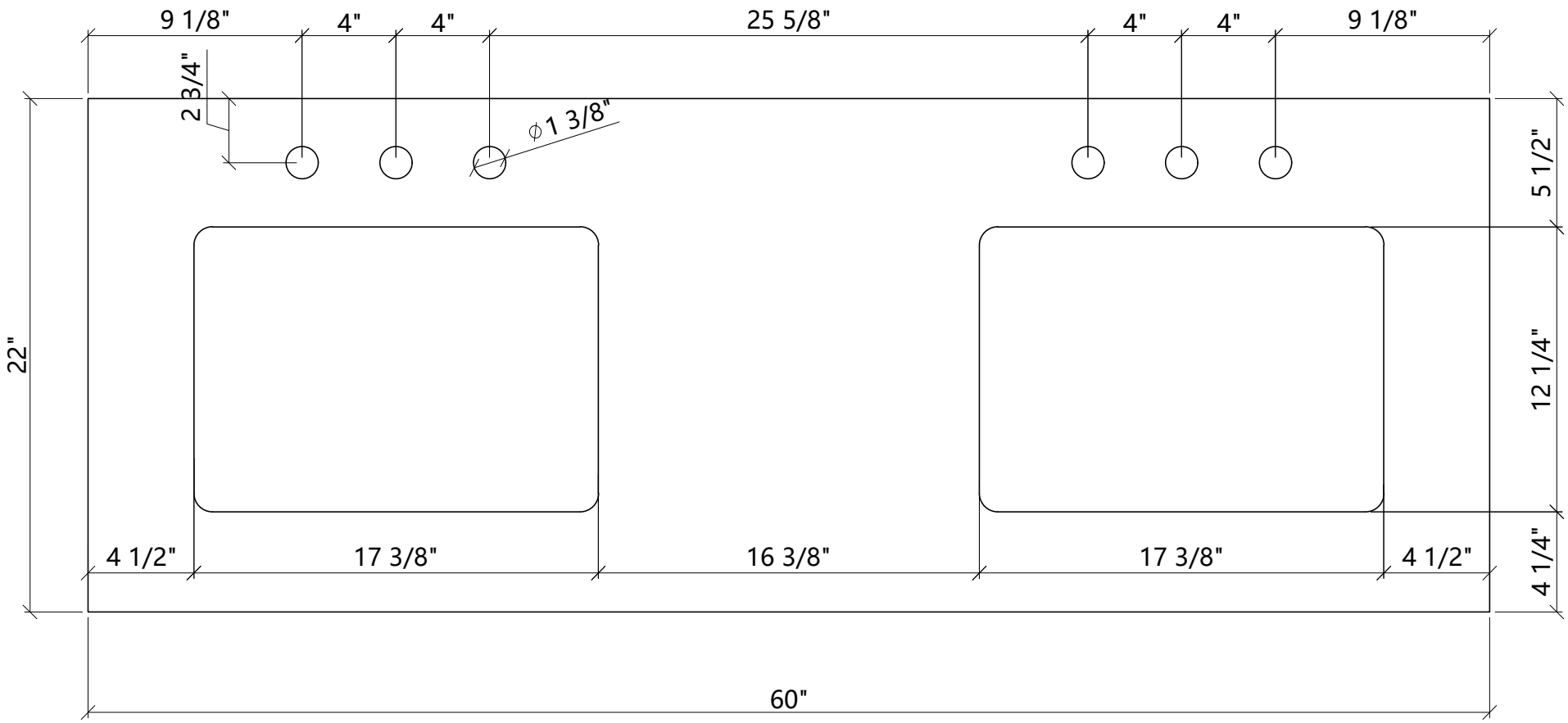
9 1/8"
4"
4"
25 5/8"
4"
4"
9 1/8"
2 3/4"
ϕ1 3/8"
5 1/2"
22"
12 1/4"
4 1/2"
17 3/8"
16 3/8"
17 3/8"
4 1/2"
4 1/4"
60"

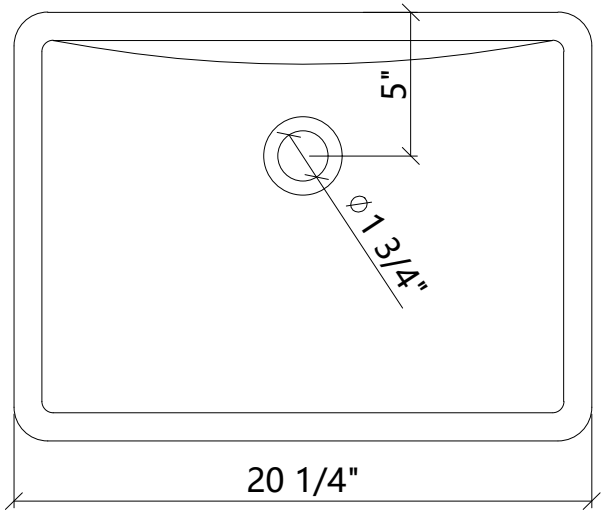
5"
ϕ 1 3/4"
20 1/4"

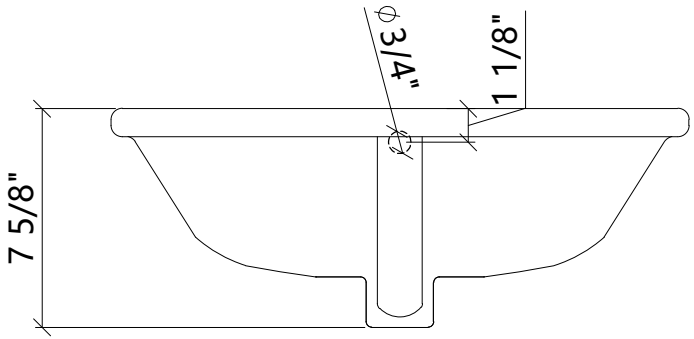
ϕ 3/4"
1 1/8"
7 5/8"

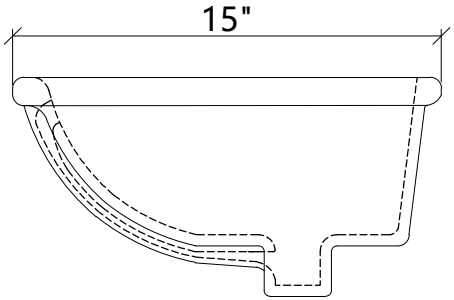
15"