ASSEMBLY INSTRUCTIONS

Read all instructions carefully before assembly.

AF-2062A

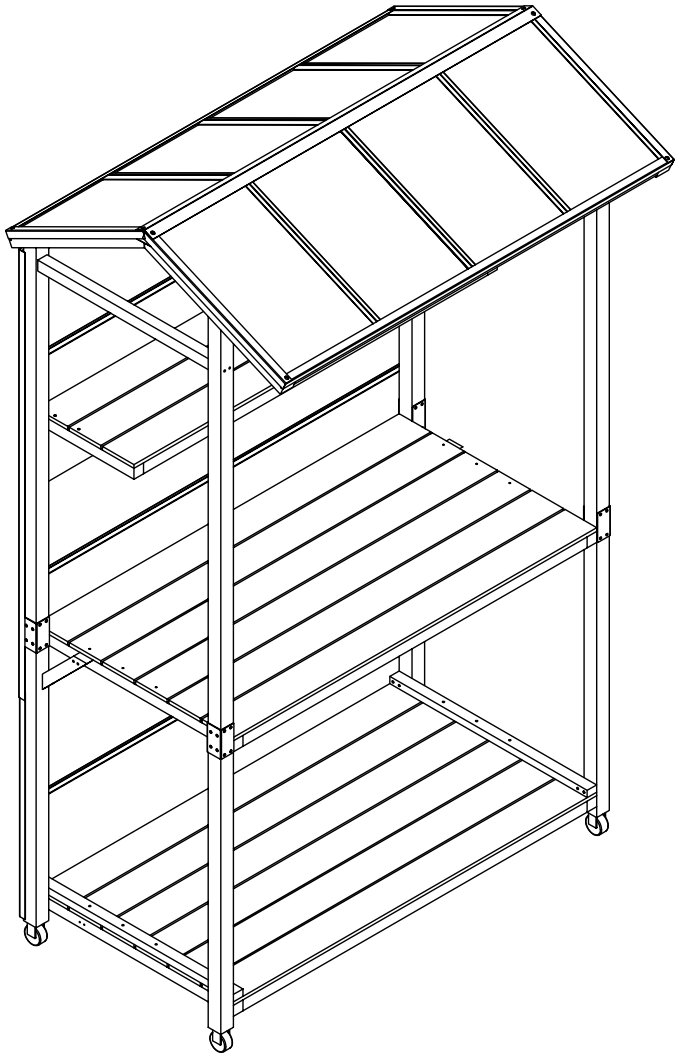

Keep this manual for future reference.

Model: AF-2062A | Revision: 2026-08

BEFORE YOU START

Review these points before opening the hardware bags.

PRE-ASSEMBLY CHECK

- Verify all parts and hardware before assembly.
- Assemble on a flat, stable and protected surface.
- Two adults are recommended for safer handling.
- Keep children and pets away from the assembly area.

SAFETY

- Wear gloves when handling metal parts and fasteners.
- Do not climb, sit or stand on the product.
- Do not move the unit while it is heavily loaded.
- Lock the braked casters before assembly and during use.

ASSEMBLY TIPS

- Match part labels exactly before fastening.
- For mirror-image parts, compare hole positions before tightening.
- Start screws by hand first. Tighten evenly after parts are aligned.
- Do not force a fastener if holes do not align.

AFTER ASSEMBLY

- Check that the unit is level and stable.
- Tighten all fasteners after the frame is fully aligned.
- Periodically inspect and retighten fasteners during use.
- Do not exceed the product's rated load capacity.

IMPORTANT

If any part is damaged or missing, stop assembly and obtain the correct replacement part before continuing.

PARTS OVERVIEW

Match the part code on each component to the diagram before assembly.

A		2	
B	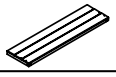	1	
C1		2	
C2		4	
C4		2	
C5		2	
C6		1	
C7		4	
C8		4	
F2		4	
F3	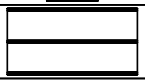	3	
G1		1	
G2	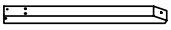	1	
G3	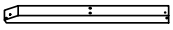	1	

G4	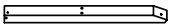	1	
J1		1	
J2		1	
J3		1	
J4		1	
K1		2	
K2		2	
M1	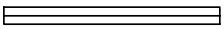	2	
M2		2	
M3		2	
M4	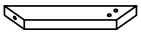	2	
N1		1	
N3		2	

PART COUNTS

A x2 B x1 C1 x2 C2 x4 C4 x2 C5 x2 C6 x1 C7 x4 C8 x4 F2 x4 F3 x3 G1-G4 x1 each J1-J4 x1 each K1 x2 K2 x2 M1-M4 x2 each N1 x1 N3 x2

HARDWARE & CASTERS

Required quantity and spare quantity are shown separately for clarity.

Code	Description / Size	Required	Spare
H1	Screw - M3.5 x 15 mm	68	3
H2	Screw - M3.5 x 30 mm	38	2
H3	Screw - M3.5 x 35 mm	18	1
H4	Screw - M3.5 x 45 mm	28	2
H5	Screw - M3.5 x 60 mm	16	1
H6	M8 cross dowel nut	4	-
H7	M6 washer	34	2
H8	Bracket	2	-
P	Fixed caster	2	-
P2	Swivel caster with brake	2	-

HOW TO READ QUANTITIES

Required = hardware used during assembly.
Spare = extra hardware included in the package.

Spare pieces may remain after correct assembly.

TOOLS / PREPARATION

Phillips screwdriver

Protective gloves recommended

Tools are not shown in the original parts list.

01

PREPARE THE FOUR POSTS

Insert H6 into K1 and K2 at the hole locations shown.

PARTS: K1 x2 | K2 x2 | H6 x4

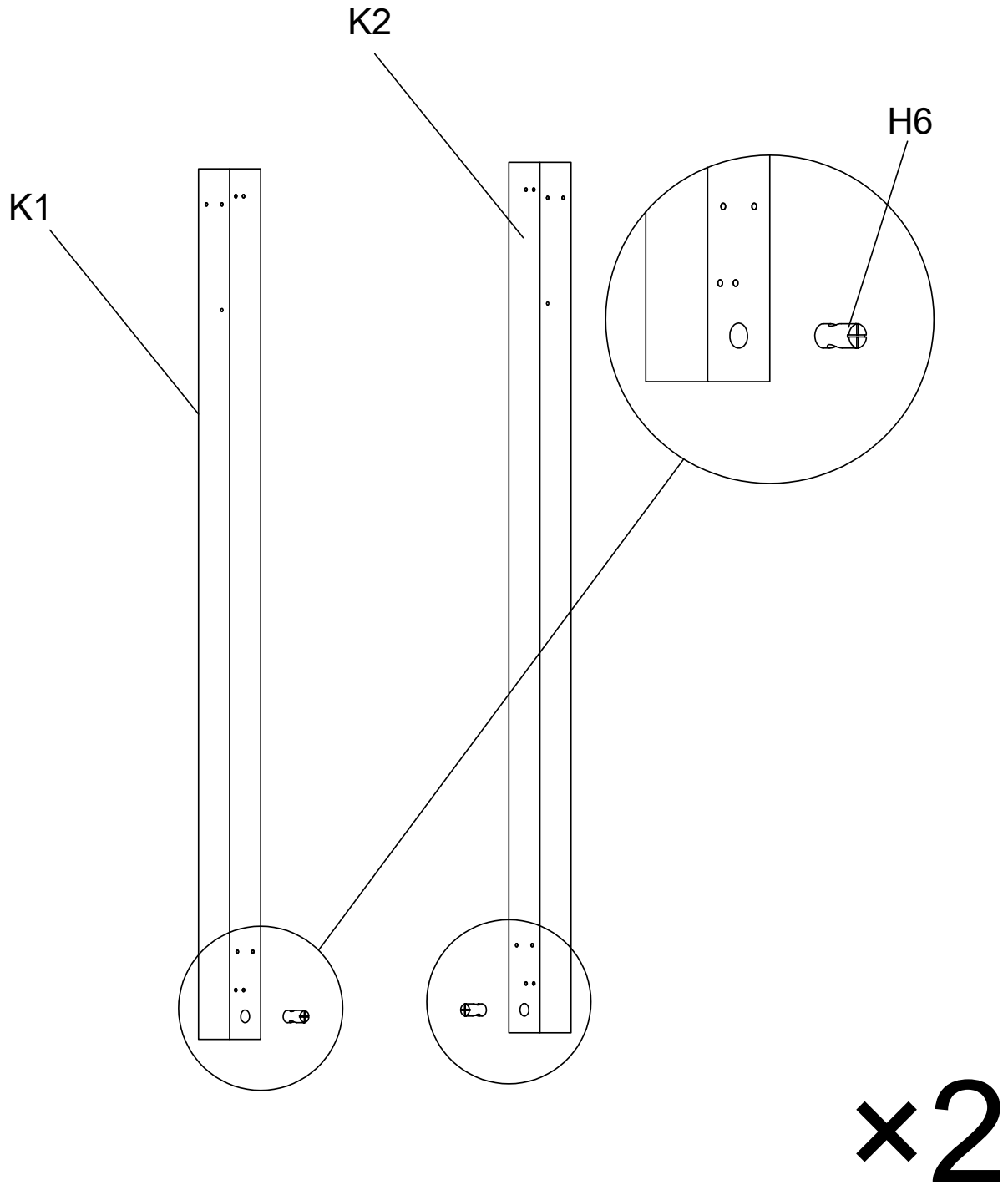

TIP: K1 and K2 are very similar. Compare the hole pattern before inserting H6.

02

INSTALL THE CASTERS

Attach P to K2 and the braked caster P2 to K1. Make two matching post sets.

PARTS: P x2 | P2 x2

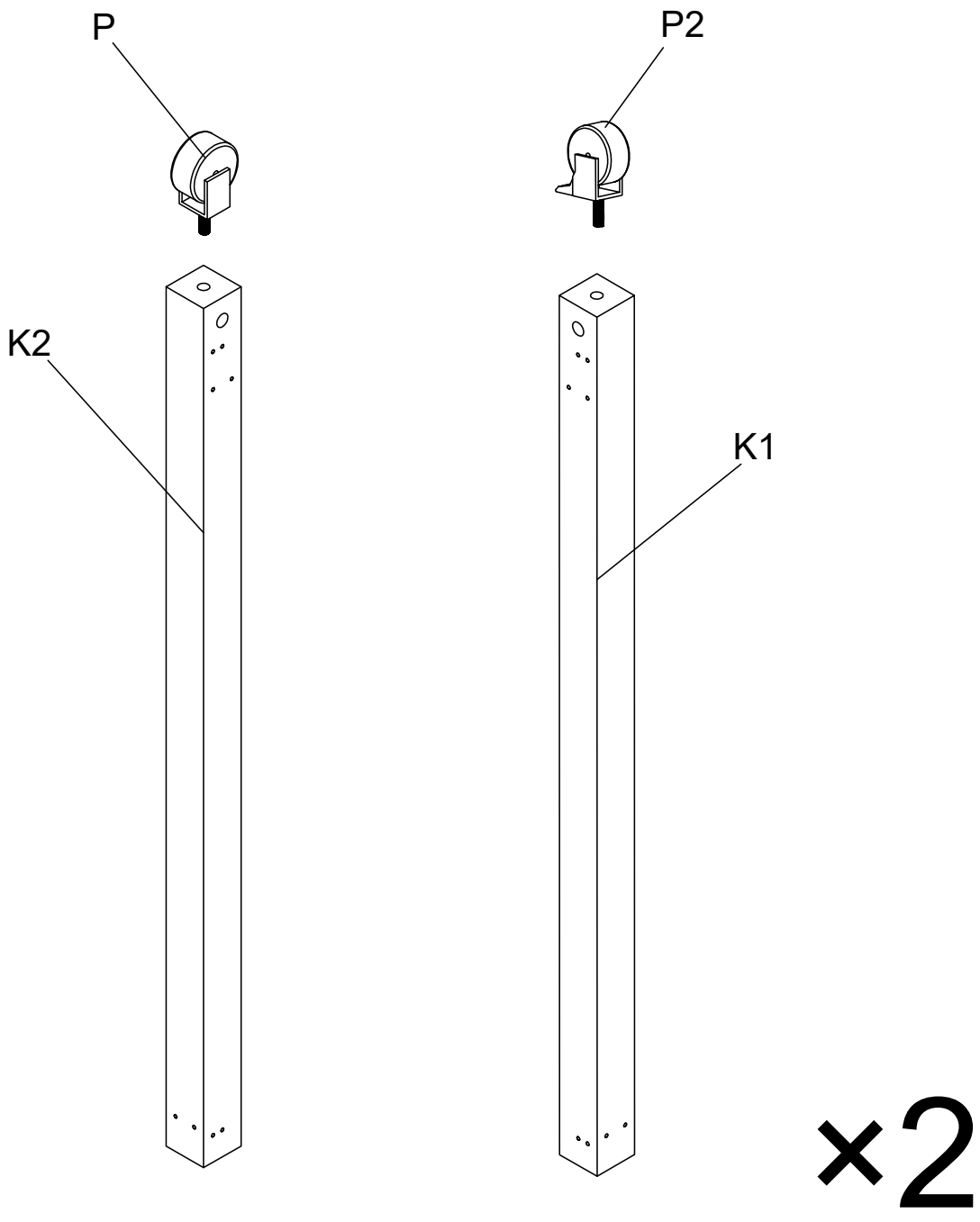

TIP: Lock the P2 caster brakes before continuing.

03

INSTALL THE FIRST SHELF

Position A between the four posts and secure the corners with C8 and H1 as shown.

PARTS: A x1 | C8 x4 | H1 x16

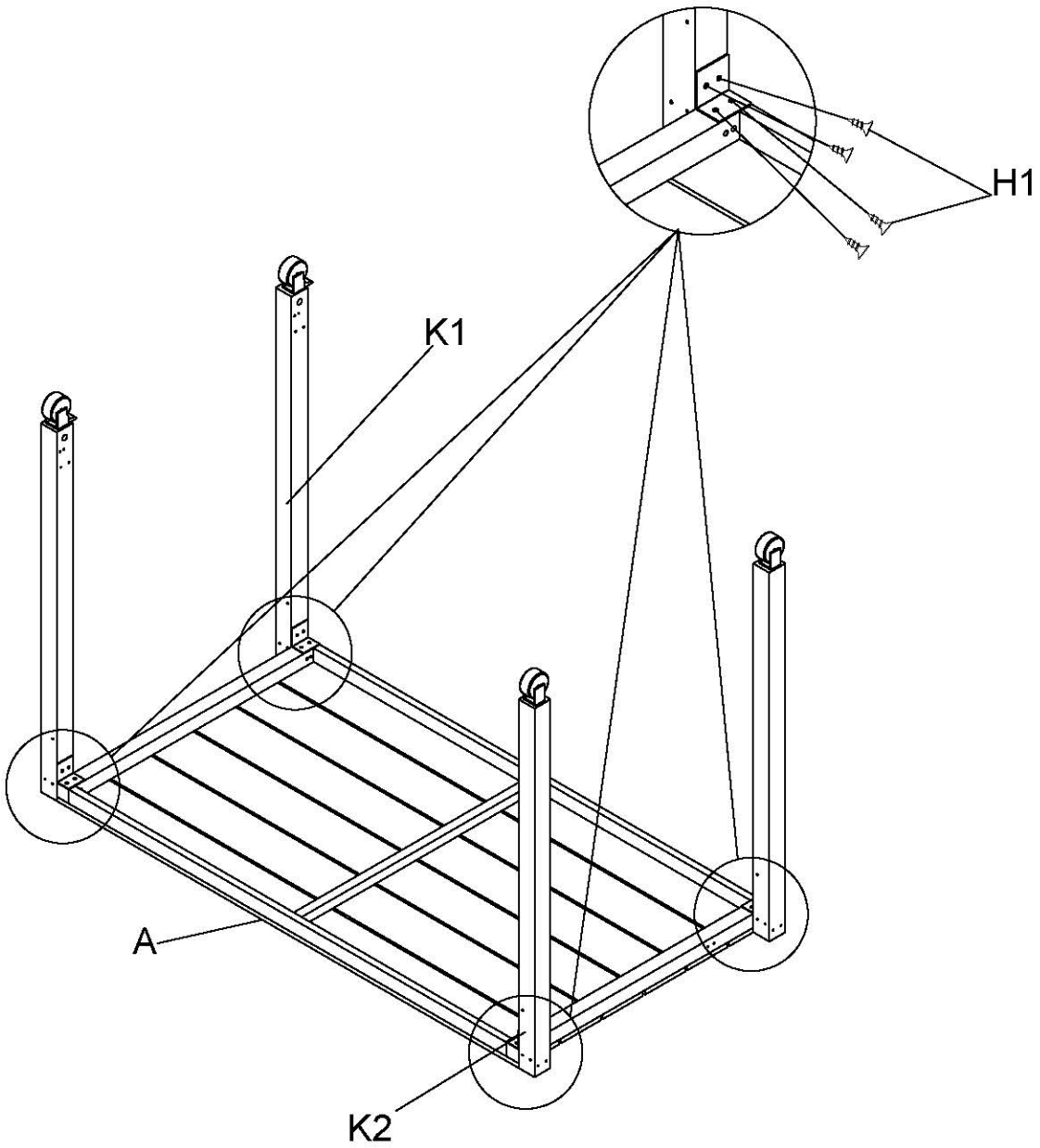

TIP: Keep the frame square while starting the screws.

04

INSTALL THE SECOND SHELF

Attach the second A panel to the posts with H4 at the eight indicated points.

PARTS: A x1 | H4 x8

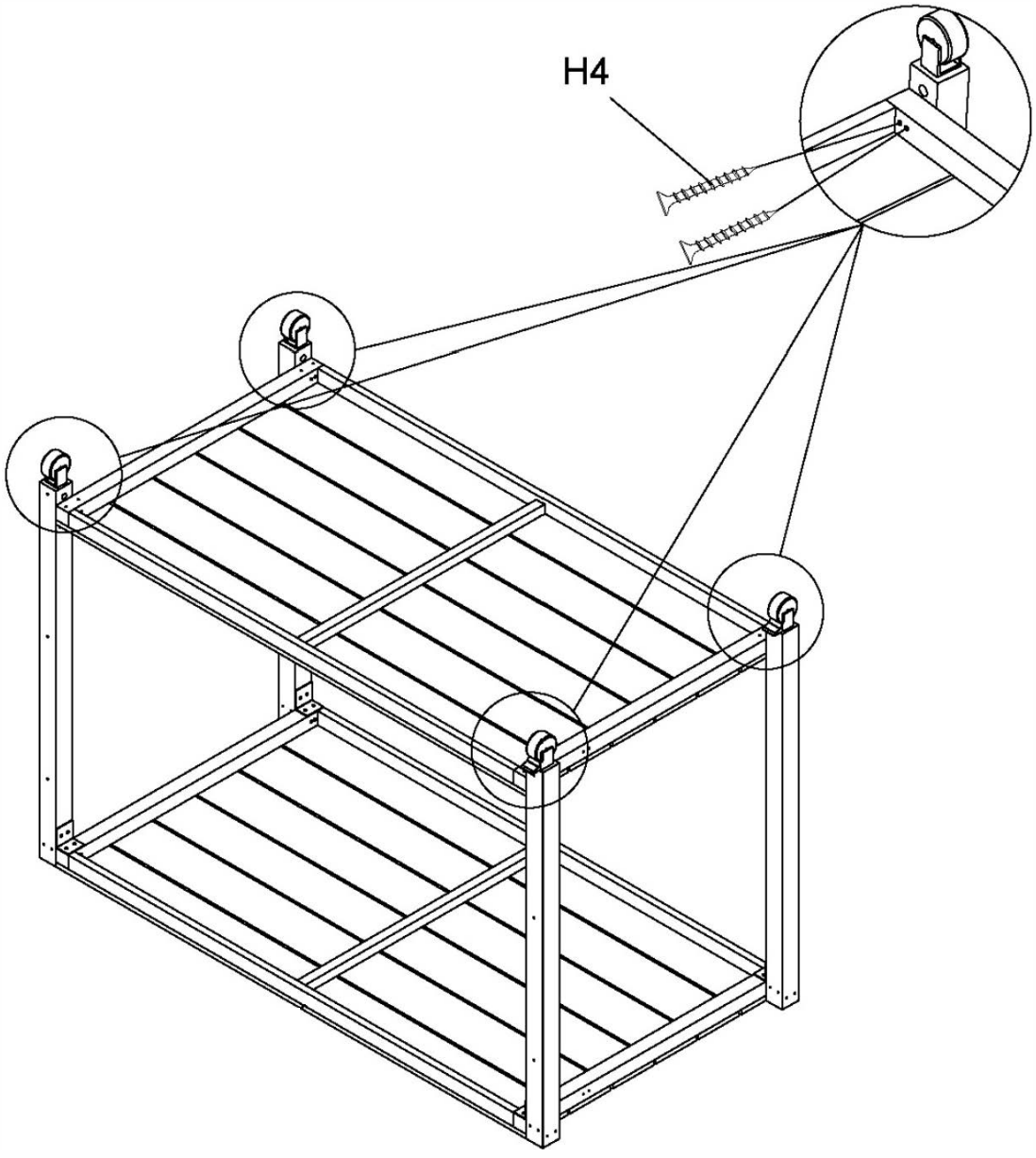

TIP: Tighten the screws evenly from corner to corner.

05

INSTALL THE SIDE SUPPORT RAILS

Attach the two M3 rails in the positions shown using H4.

PARTS: M3 x2 | H4 x8

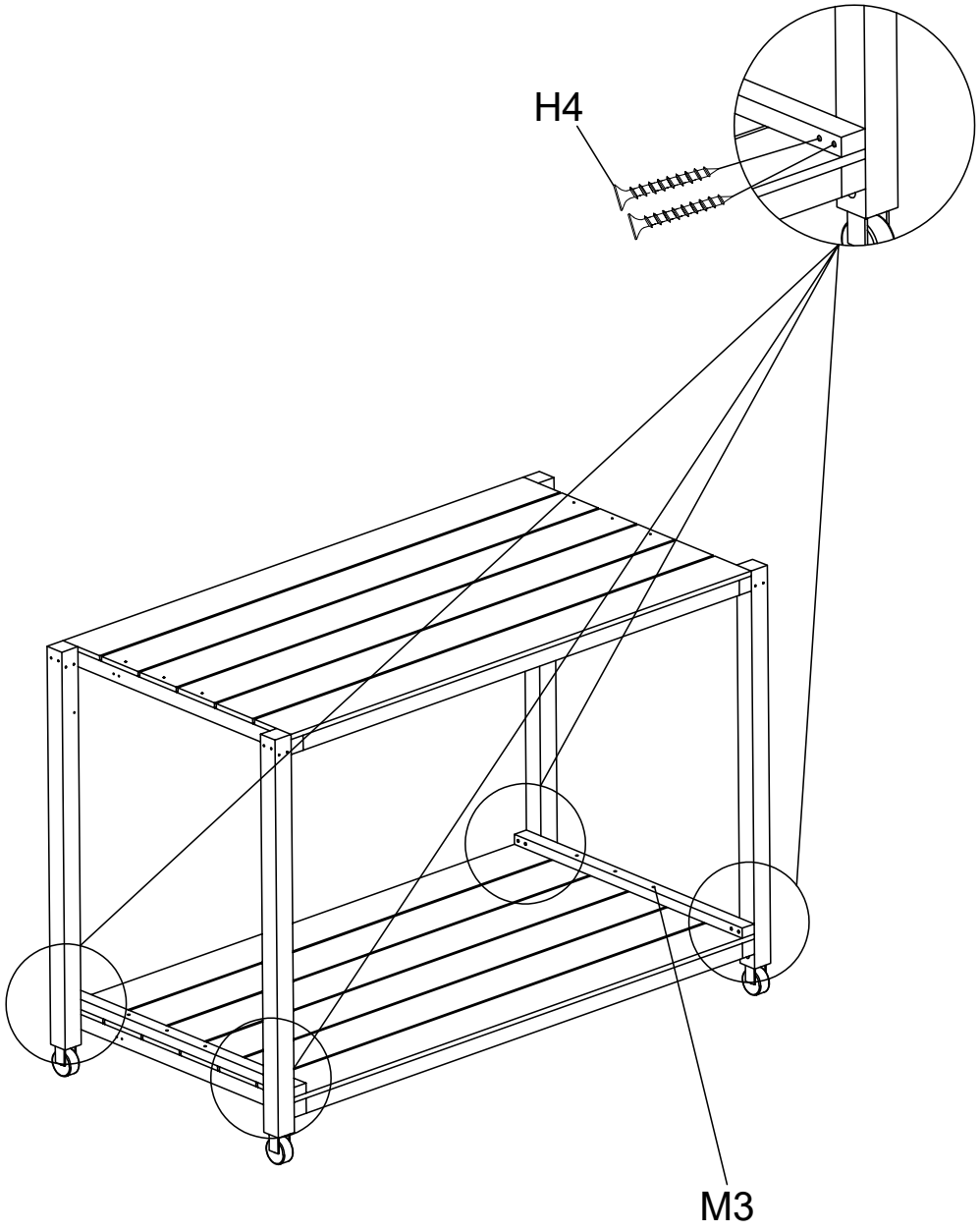

TIP: Match the hole locations on both sides before tightening.

06

SECURE THE SHELF/FRAME JOINTS

Install H3 at the six indicated connection points.

PARTS: H3 x6

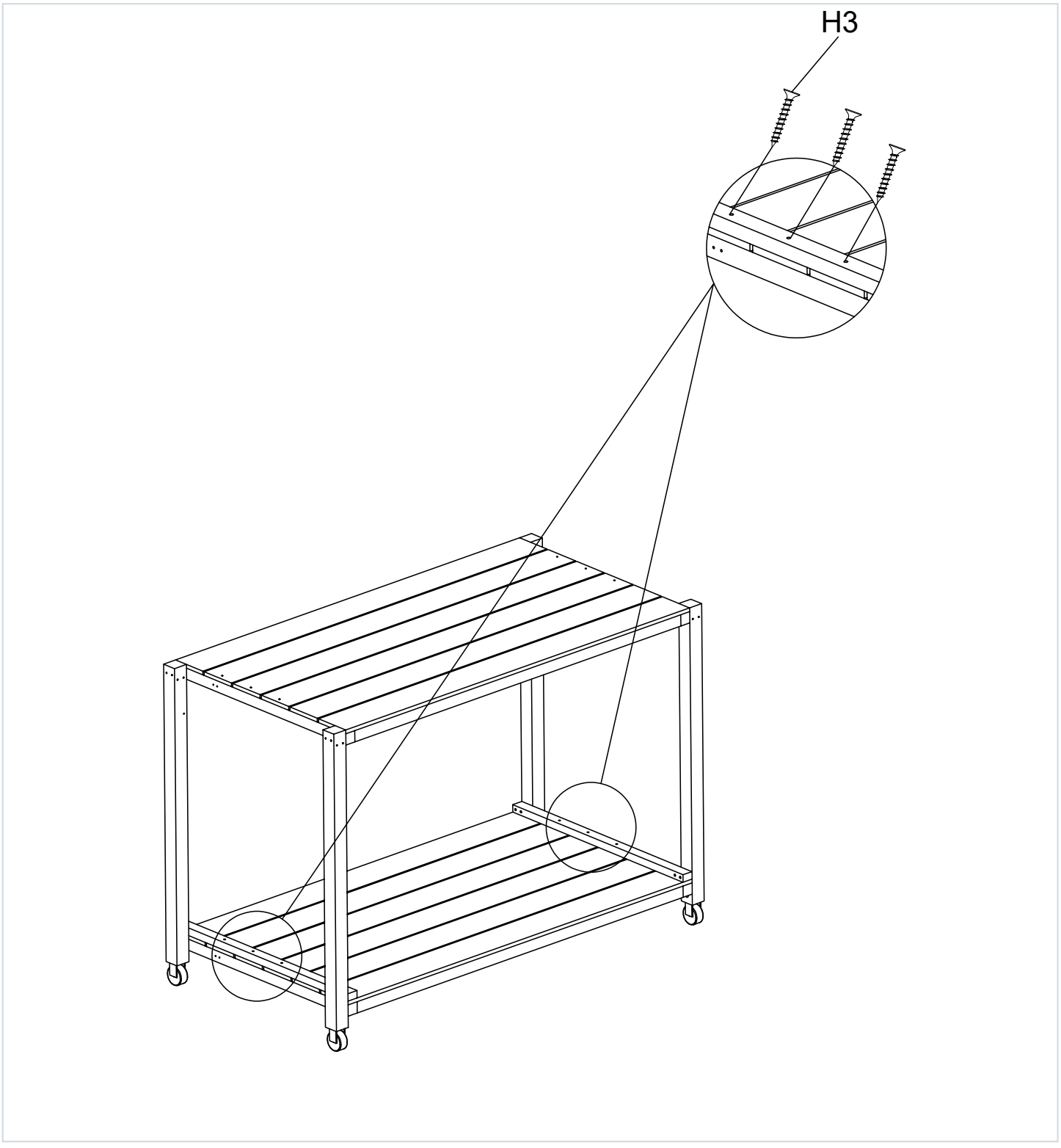

TIP: Start all six screws first, then tighten.

07

INSTALL SUPPORT BRACKETS M4

Position both M4 brackets as shown and secure with H3.

PARTS: M4 x2 | H3 x6

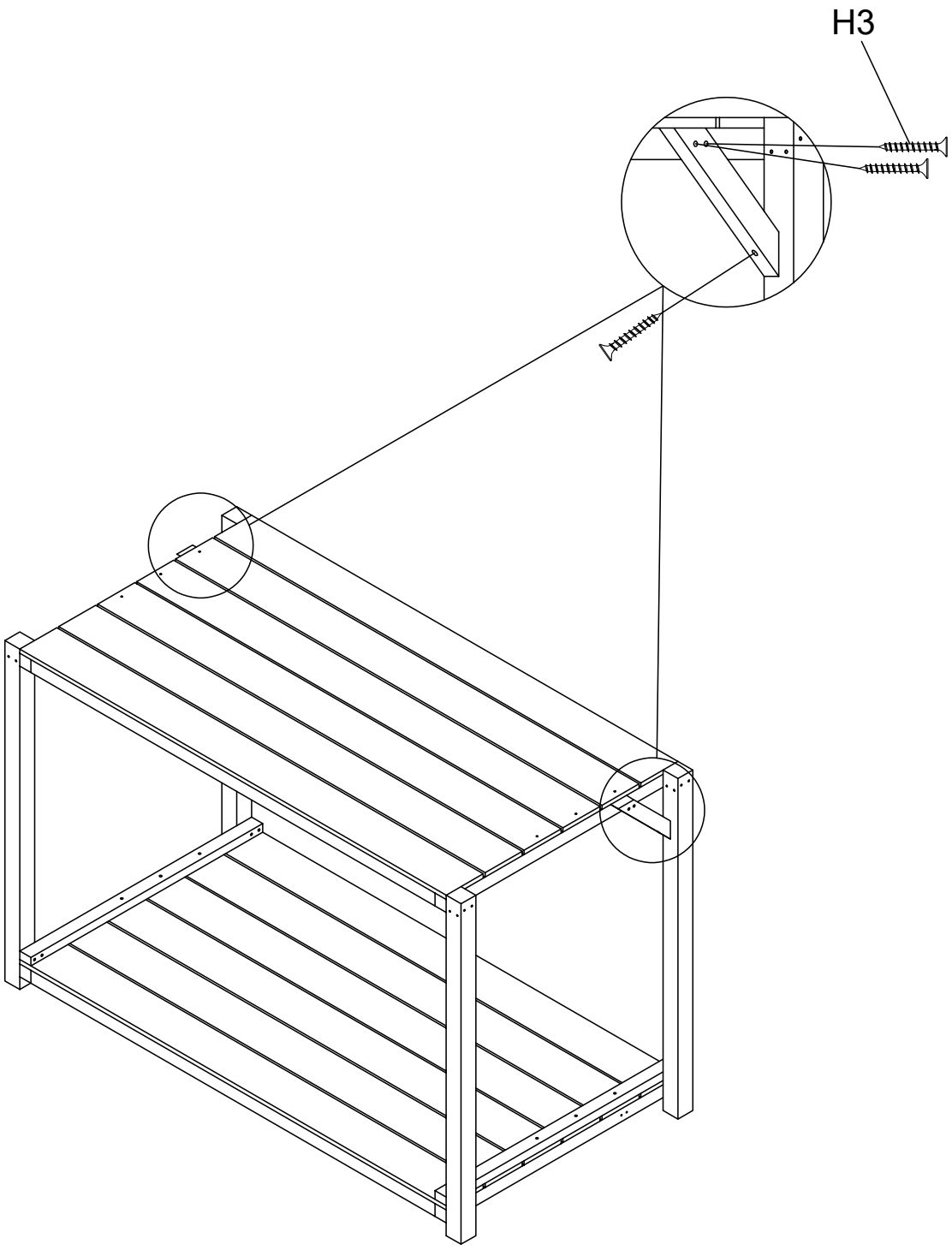

TIP: Confirm both brackets face the same direction.

08

INSTALL THE C7 CONNECTOR PLATES

Attach four C7 plates using H1. Keep the plate orientation consistent at all four locations.

PARTS: C7 x4 | H1 x24

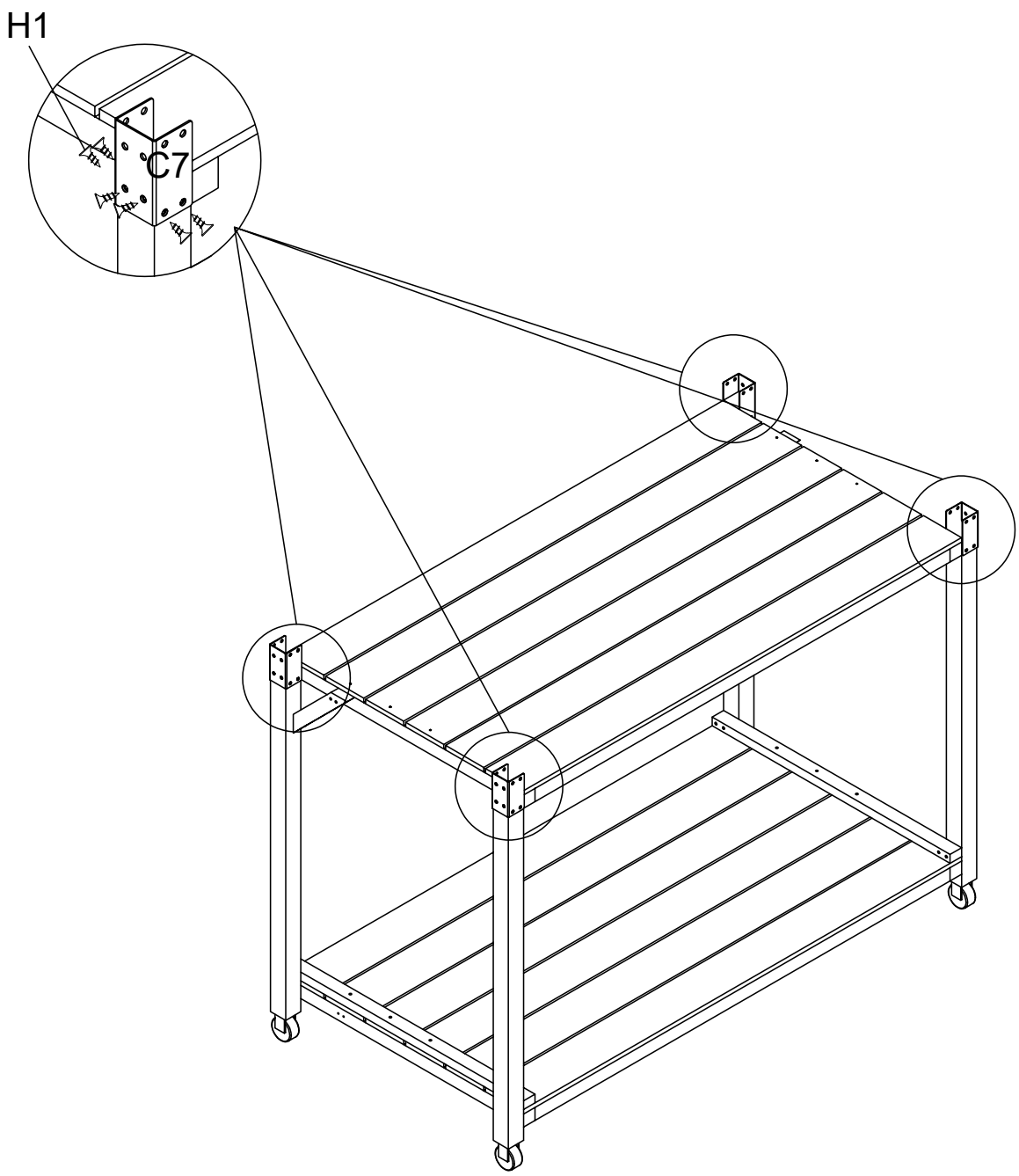

TIP: These C7 plates will be secured to the posts again in Step 22.

09

ASSEMBLE THE TWO ROOF SIDE FRAMES

PARTS: J1 x1 | J2 x1 | J3 x1 | J4 x1 | M1 x2 | H5 x8

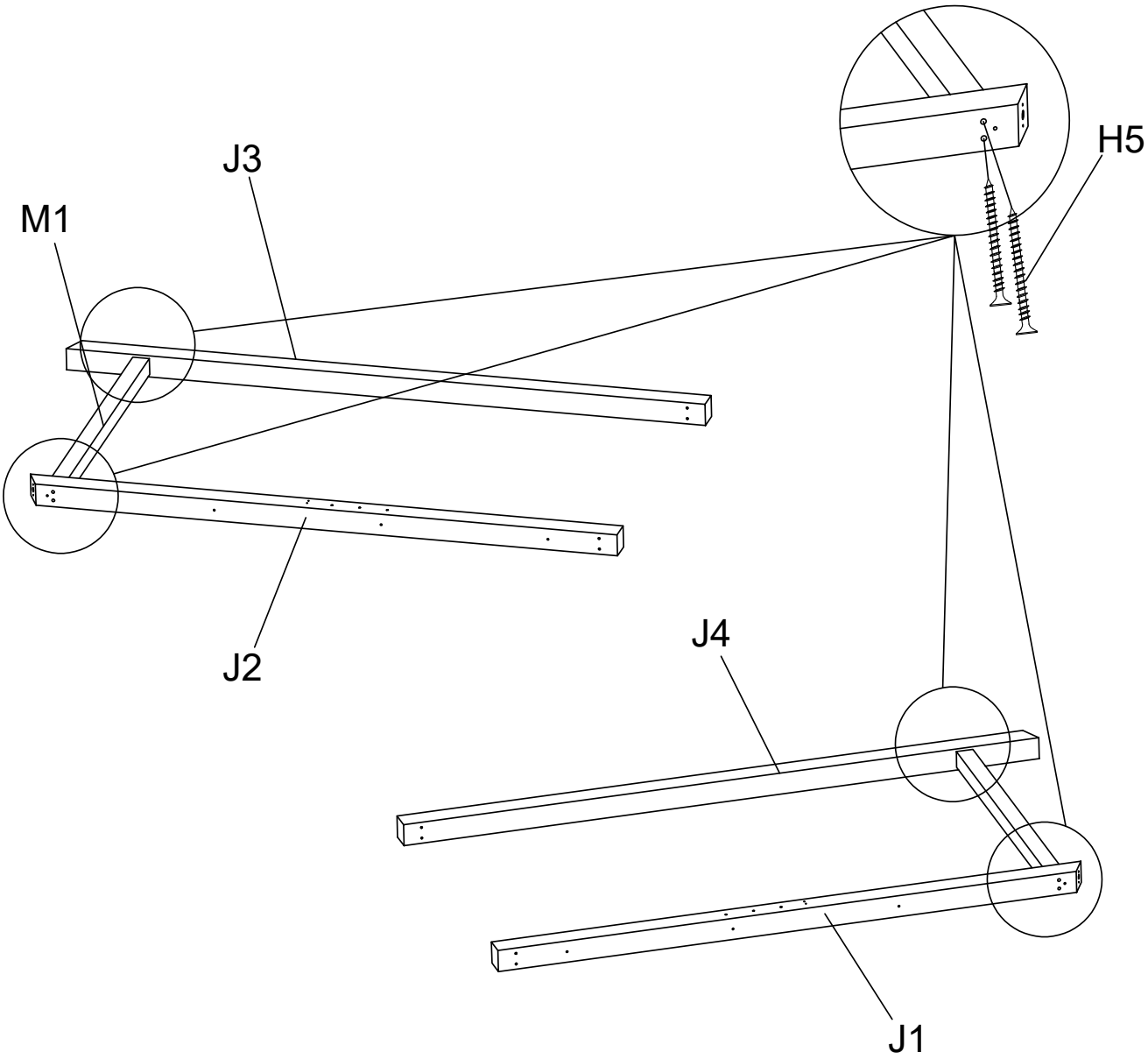

TIP: Do not repeat each assembly twice. You are making two different roof side assemblies.

10

INSTALL G1 AND G3

Attach G1 and G3 to the top of the frame as shown using H4.

PARTS: G1 x1 | G3 x1 | H4 x4

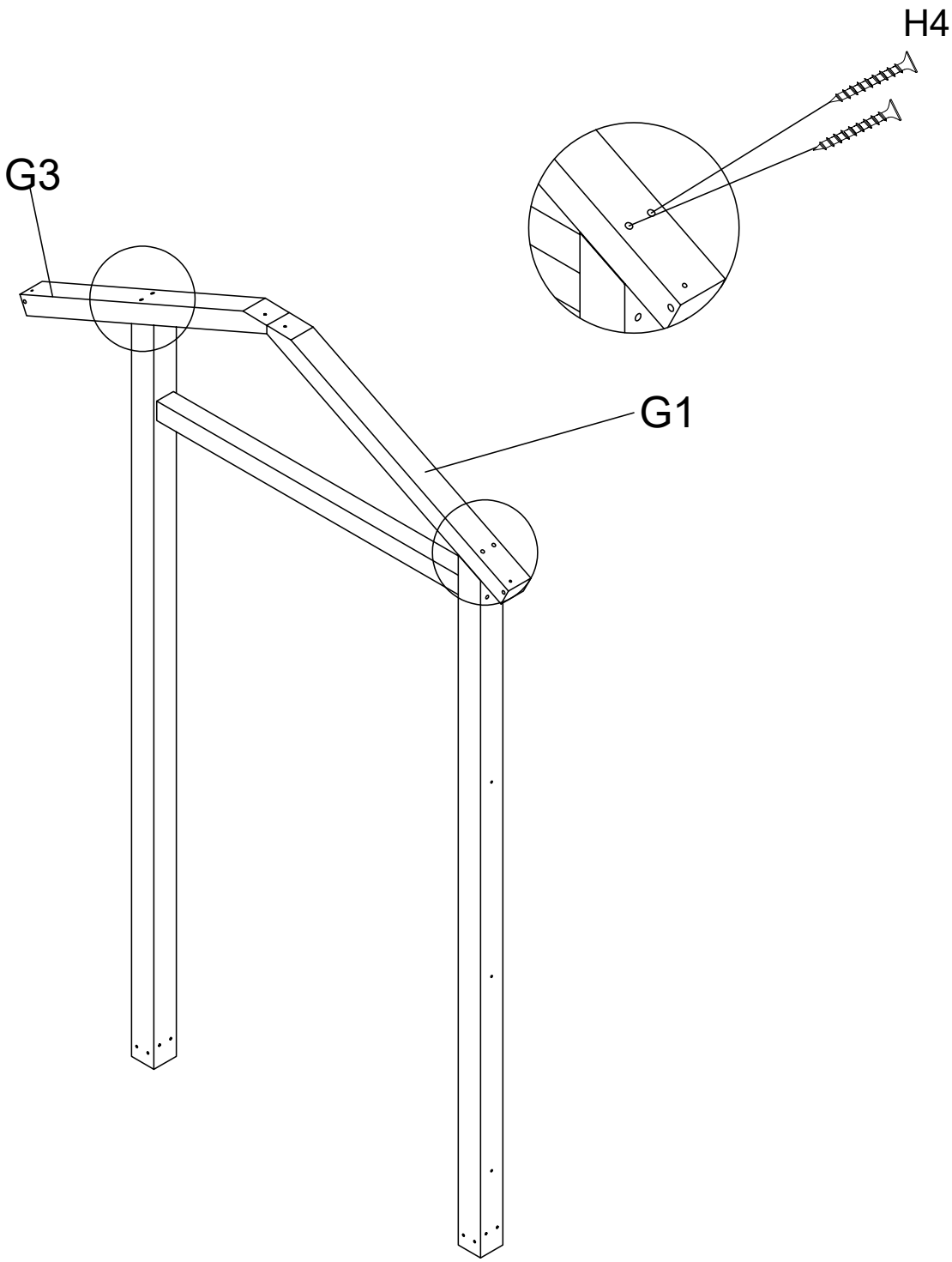

TIP: G1 and G3 are direction-sensitive. Match hole positions and slope before tightening.

11

INSTALL G4 AND G2

Attach G4 and G2 on the opposite side using H4.

PARTS: G4 x1 | G2 x1 | H4 x4

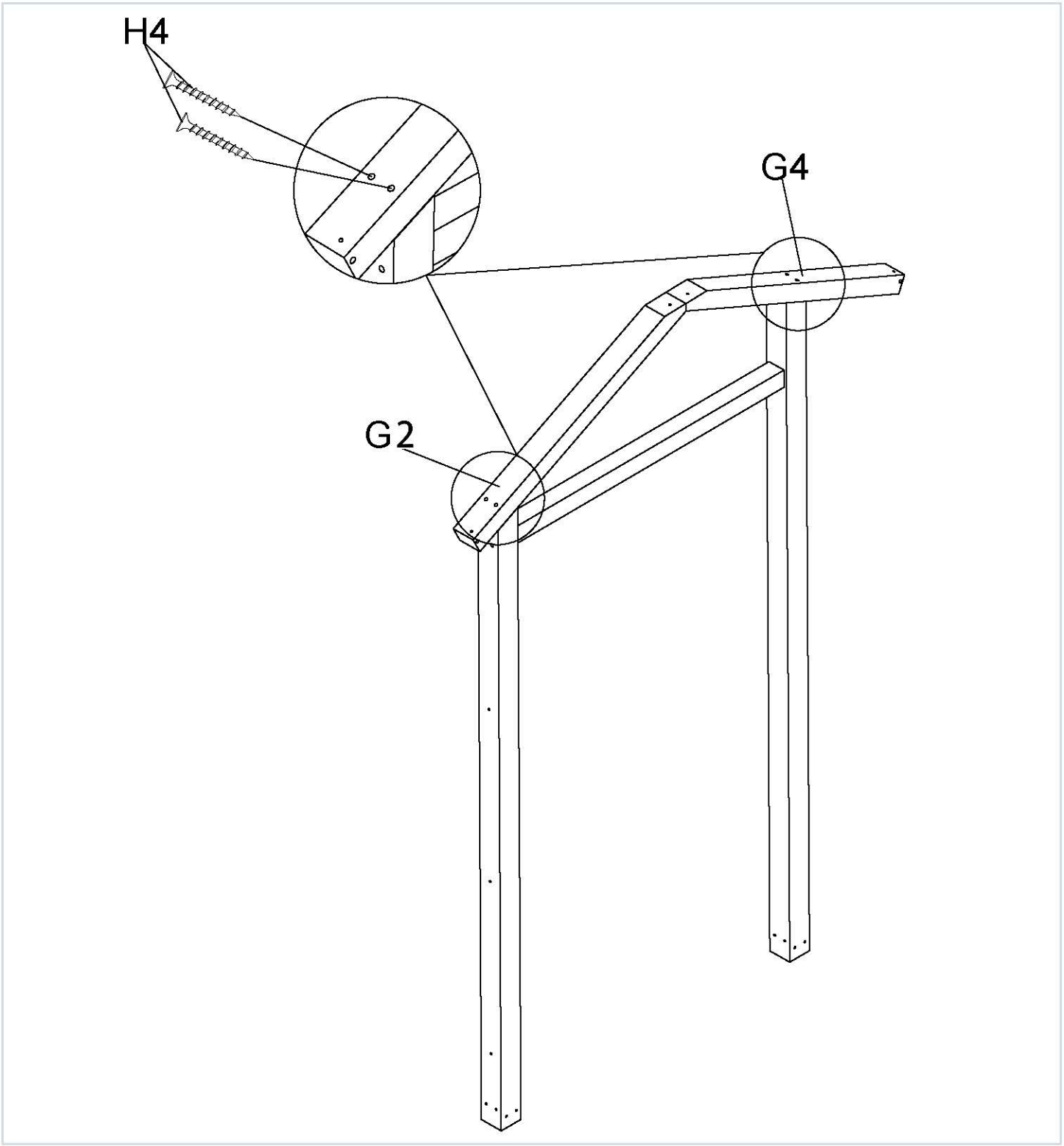

TIP: Use the same orientation check as Step 10.

12

INSTALL THE M2 BRACES

Fit one M2 brace on each side and secure with H3.

PARTS: M2 x2 | H3 x6

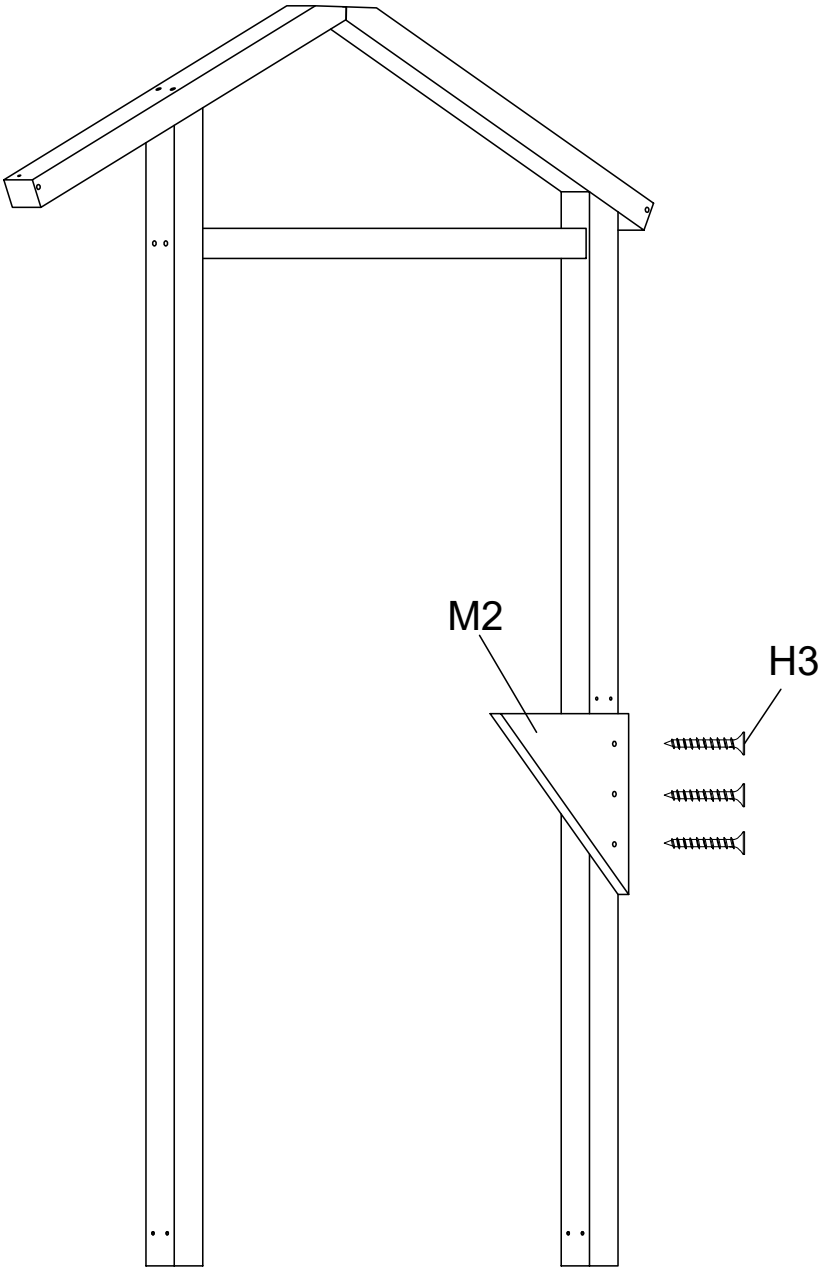

×2

TIP: Repeat on both sides. Keep the roof frame centered.

13

CONNECT THE ROOF SIDE FRAMES

Attach both N2 members between the roof side frames and fasten with H5.

PARTS: N3x2 | H5 x4

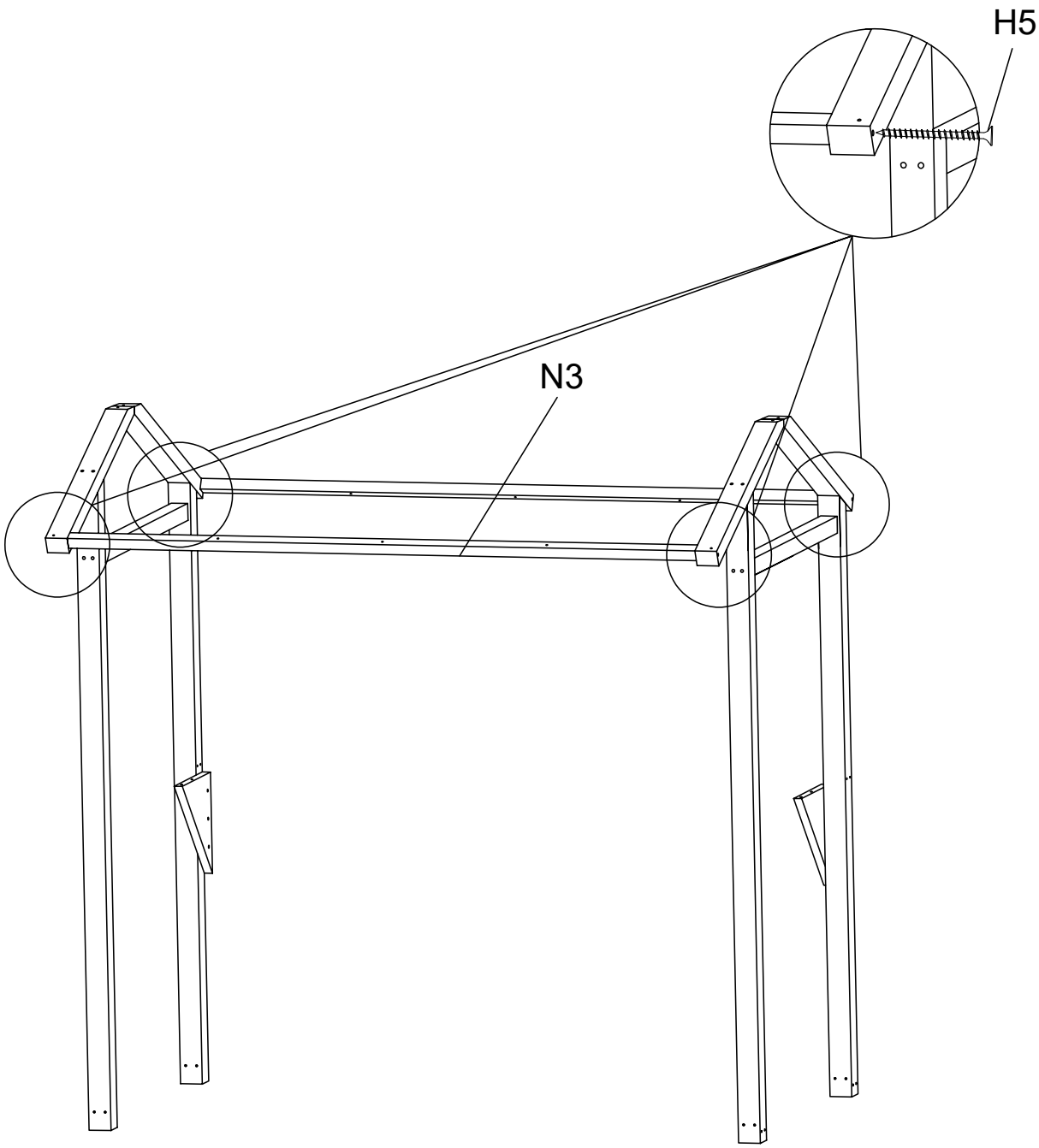

TIP: Check that both sides remain parallel before tightening.

14

INSTALL THE RIDGE BEAM N1

Position N1 at the roof center and secure it with H2.

PARTS: N1 x1 | H2 x4

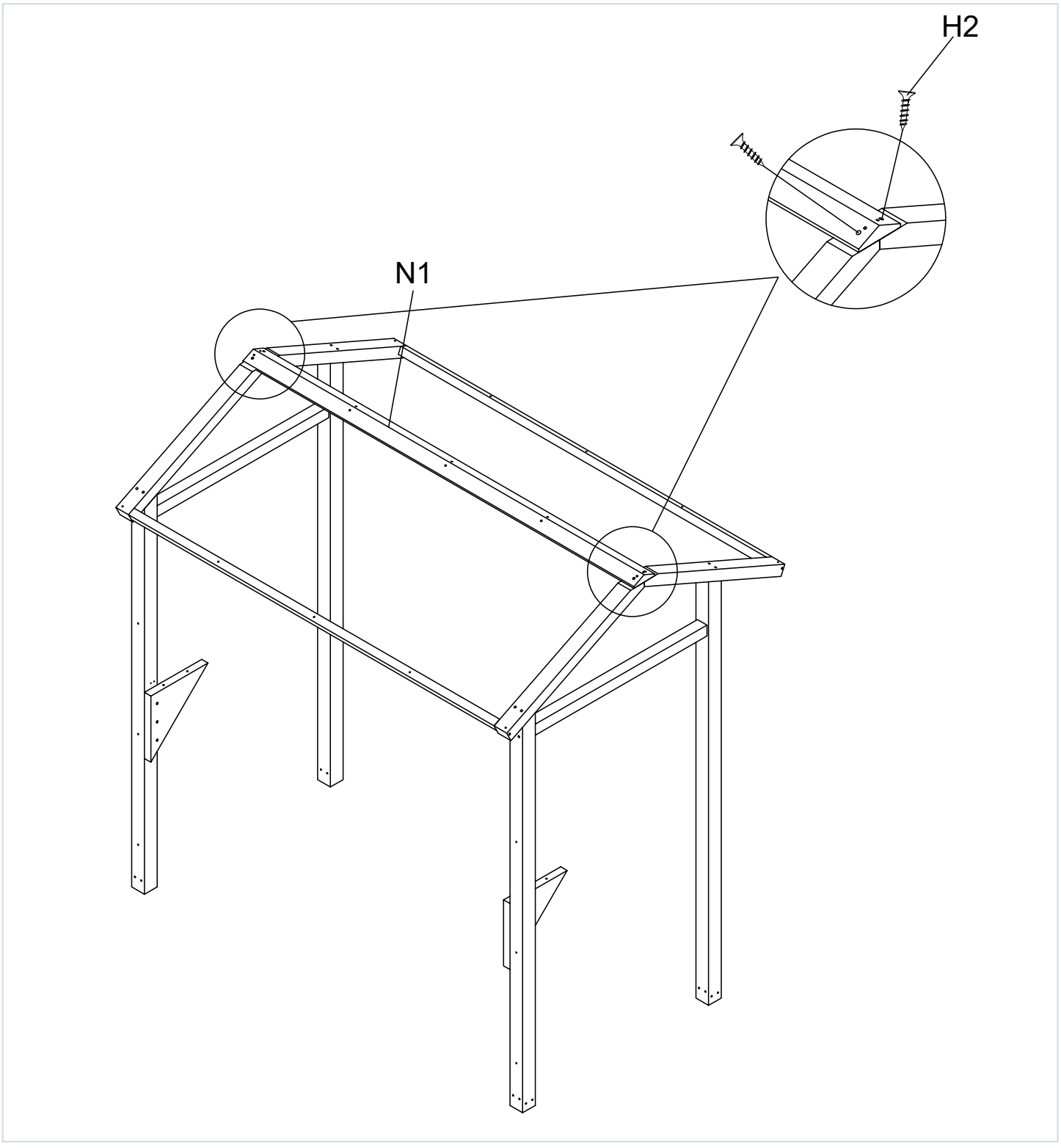

TIP: Align the ridge before fully tightening the four screws.

15

INSTALL PART B

Position B on the side section as shown and secure it with H4.

PARTS: B x1 | H4 x4

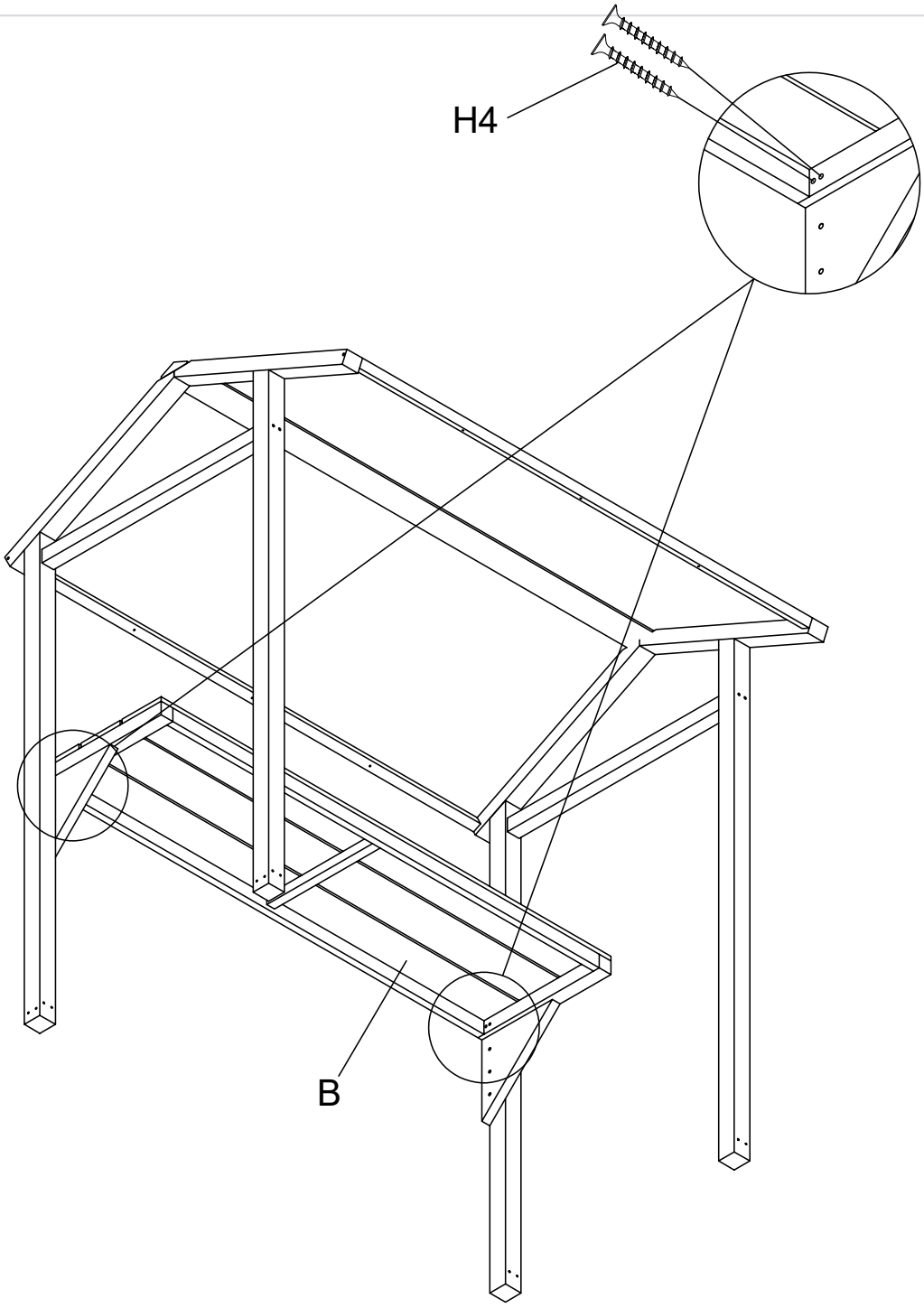

TIP: Keep the panel/rail level while fastening.

16

SECURE THE ROOF FRAME

Use H5 at the four indicated connection points to secure the roof frame to the main structure.

PARTS: H5 x4

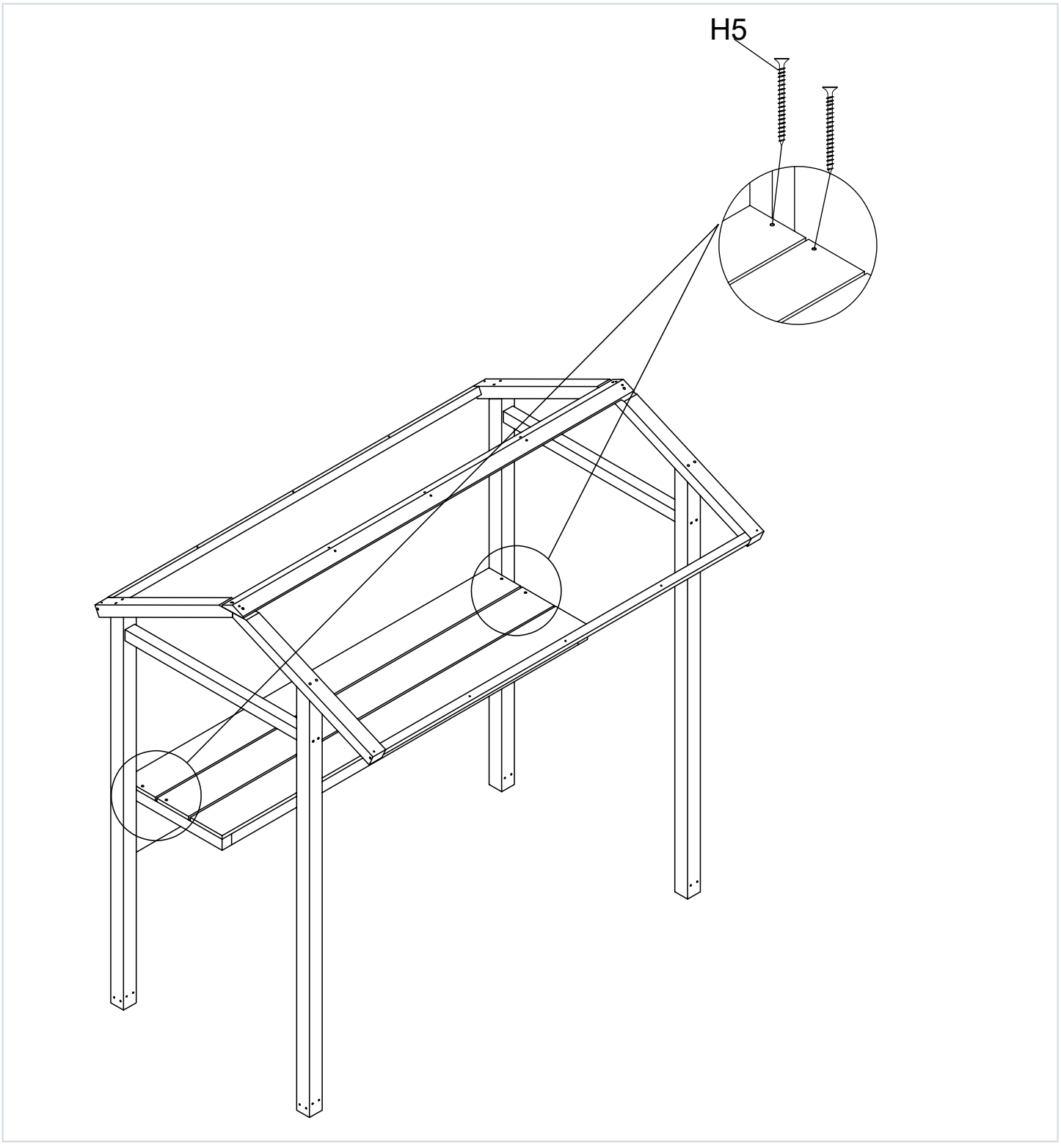

TIP: Confirm the frame is square before final tightening.

17

INSTALL THE FIRST TWO F2 ROOF PANELS

Place two F2 panels on one roof slope and secure them with H2 and H7.

PARTS: F2 x2 | H2 x6 | H7 x6

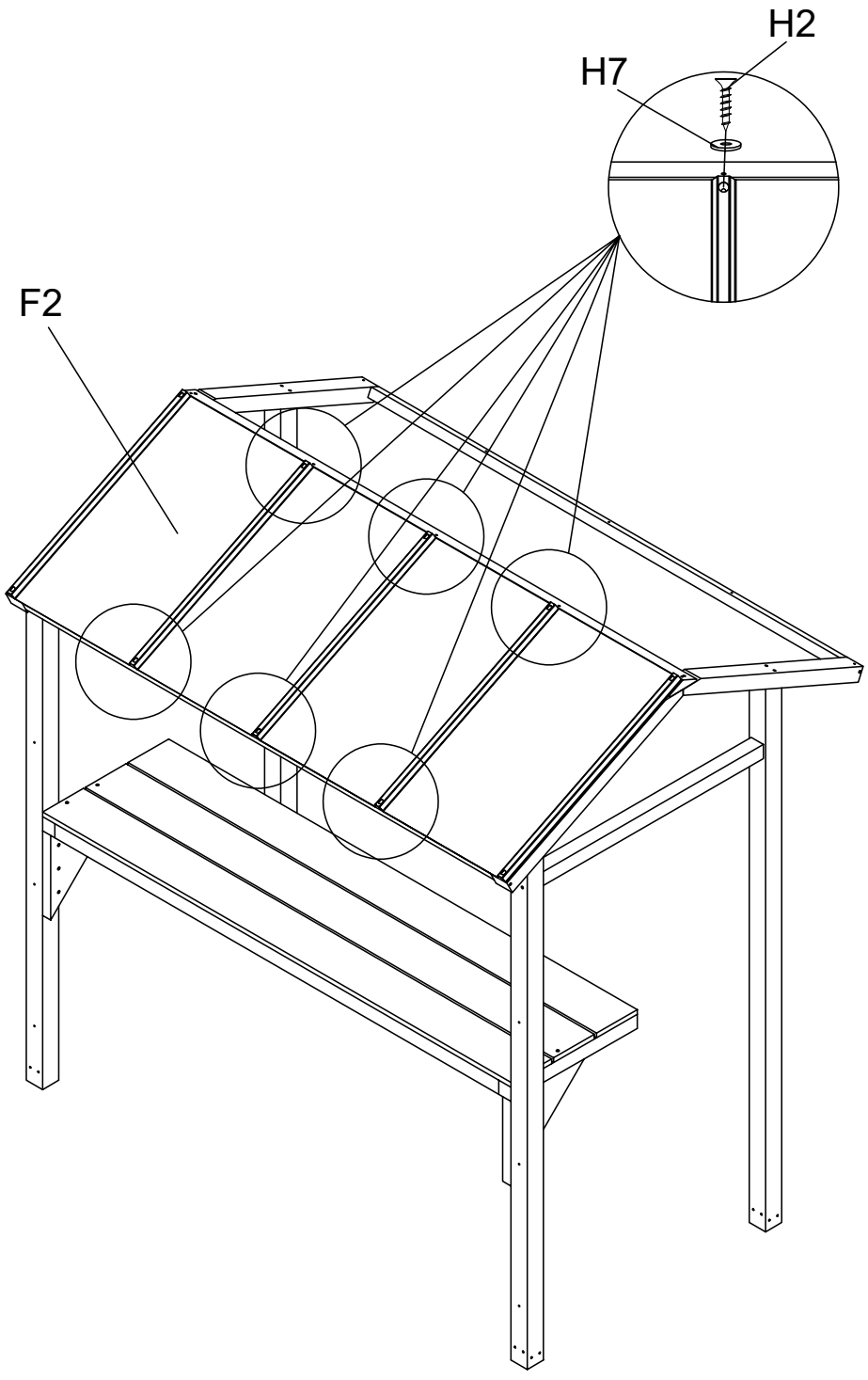

TIP: Install in order and keep the panel edges aligned. If a panel has a marked top side, face it outward.

18

INSTALL THE REMAINING F2 ROOF PANELS

Install the remaining two F2 panels on the opposite roof slope using H2 and H7.

PARTS: F2 x2 | H2 x6 | H7 x6

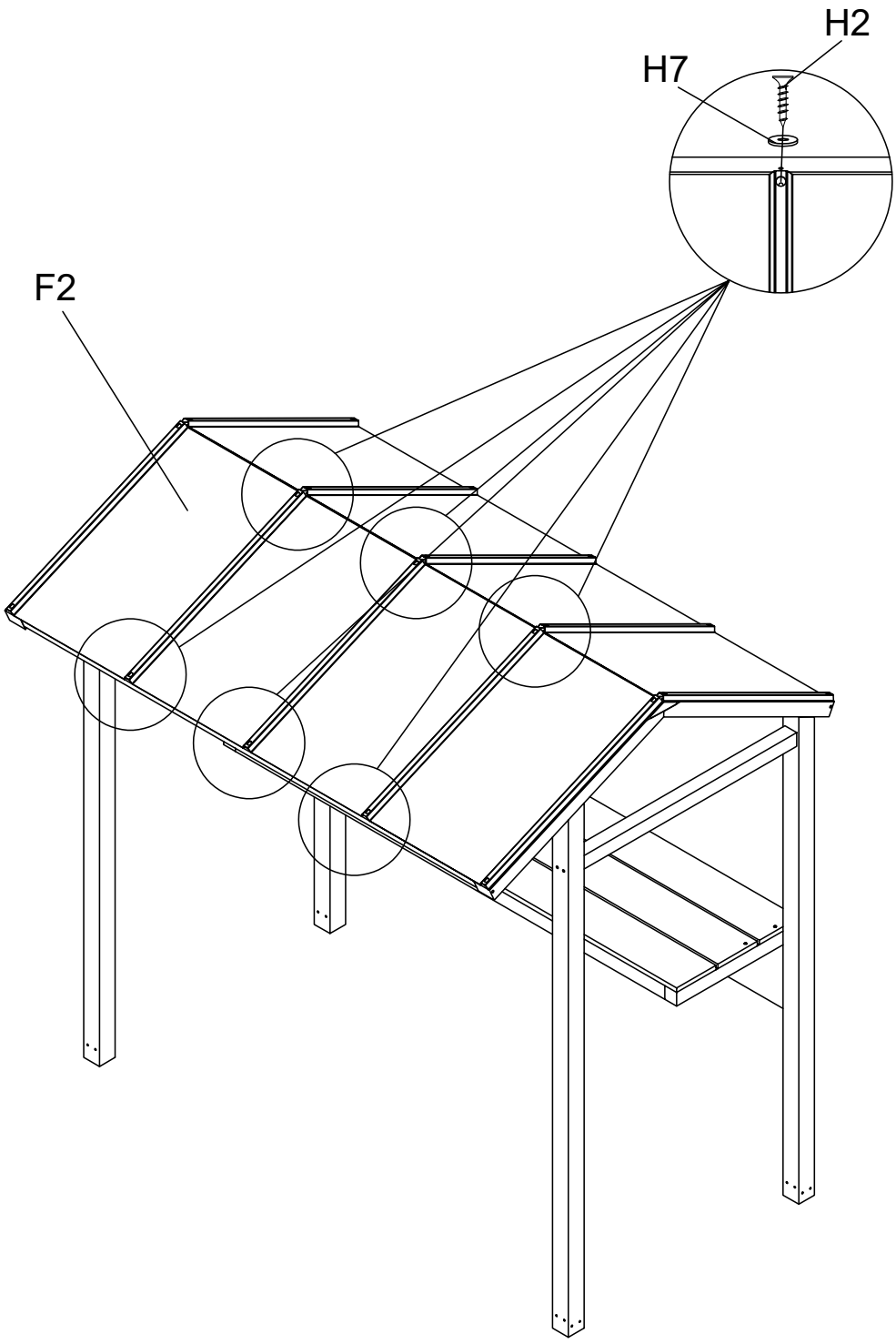

TIP: Align all four panels before final tightening.

19

INSTALL C1 AND C2 ON THE FIRST SIDE

Position one C1 and two C2 as shown, then secure with H2 and H7.

PARTS: C1 x1 | C2 x2 | H2 x2 | H7 x2

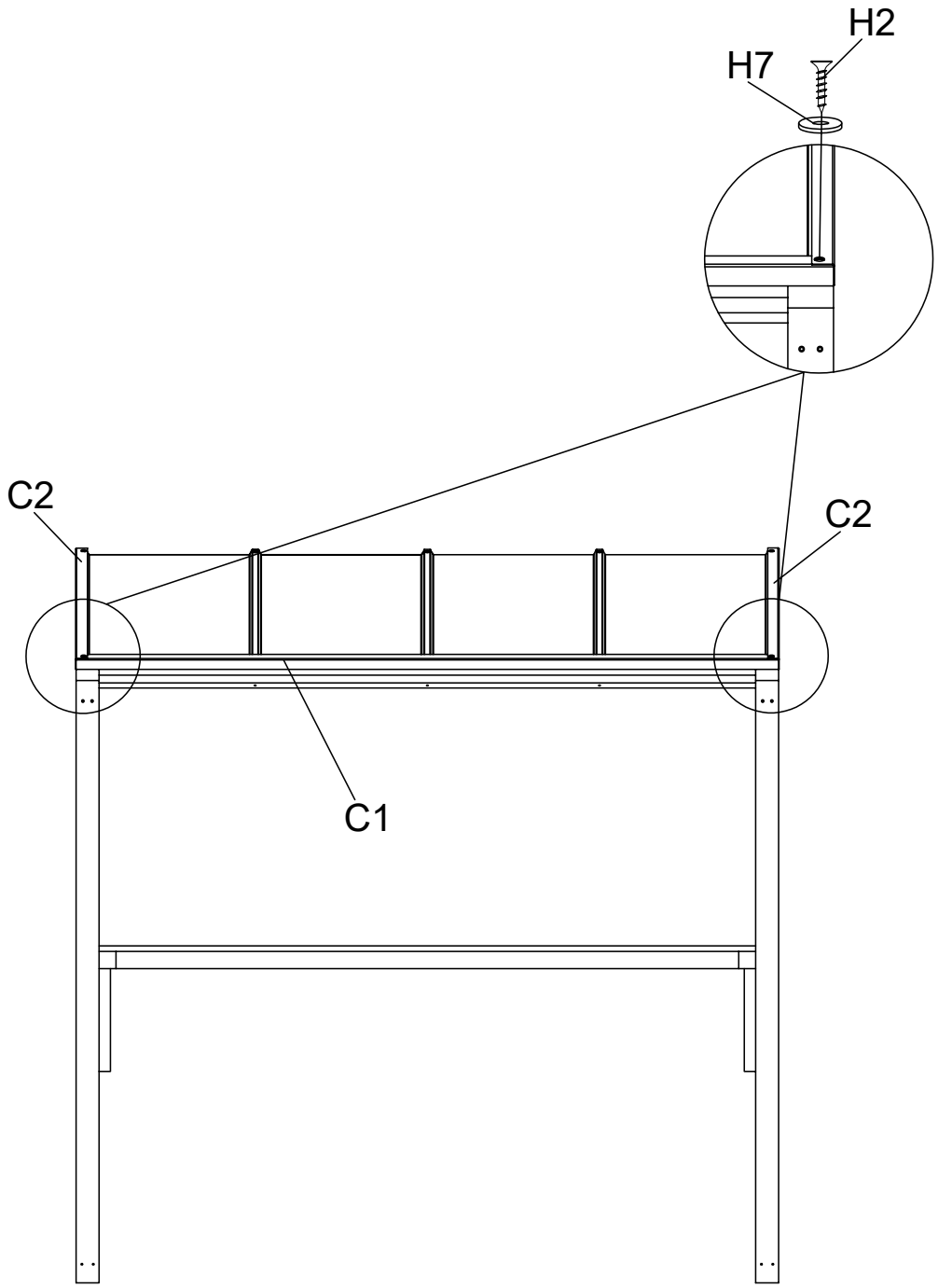

TIP: Check the vertical C2 pieces are square to the frame.

20

REPEAT C1 AND C2 ON THE OPPOSITE SIDE

Install the second C1 and the remaining two C2 using H2 and H7.

PARTS: C1 x1 | C2 x2 | H2 x2 | H7 x2

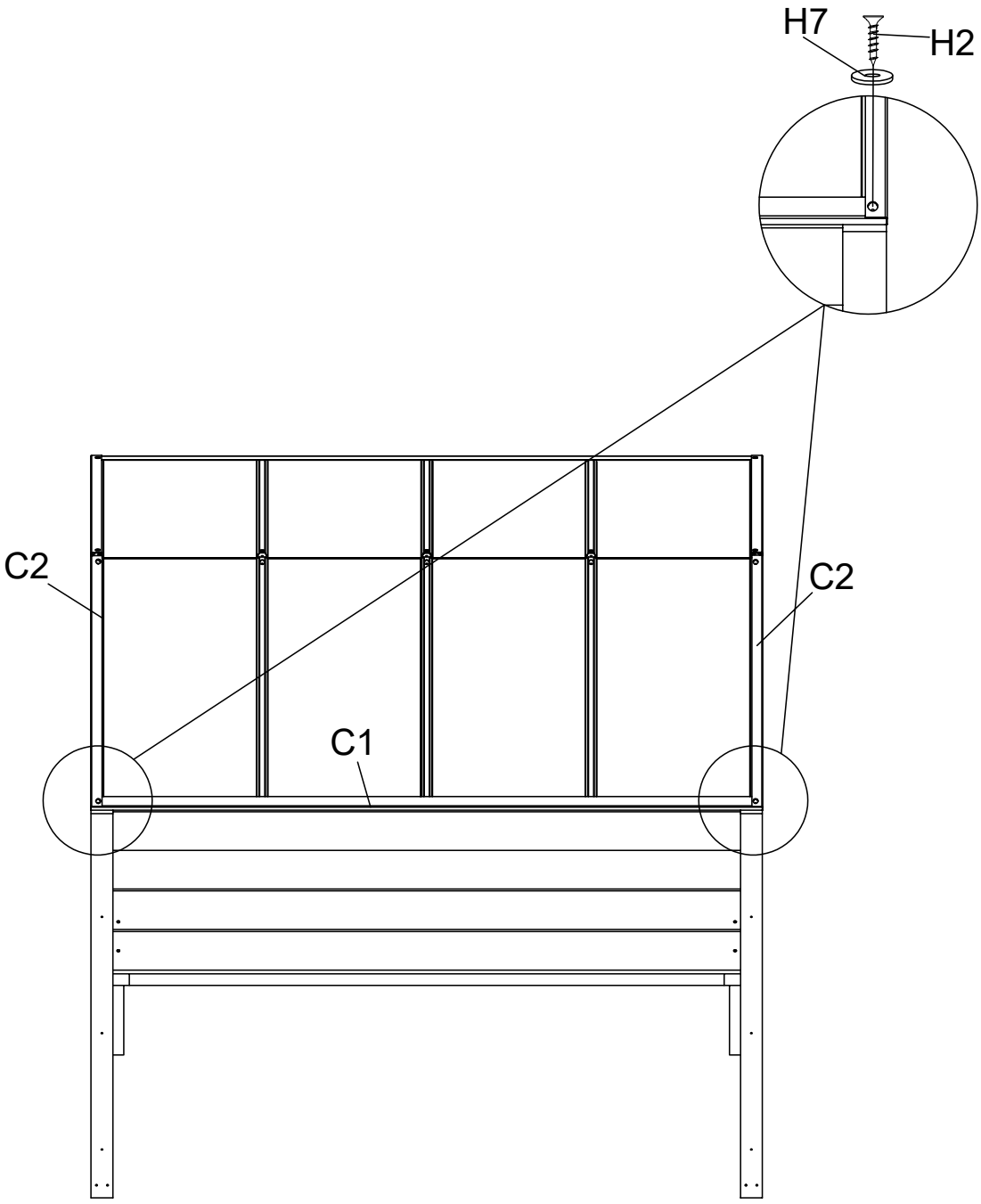

TIP: Mirror the layout from Step 19.

21

INSTALL THE TOP RAIL C6

Position C6 as shown and secure it with H2 and H7.

PARTS: C6 x1 | H2 x4 | H7 x4

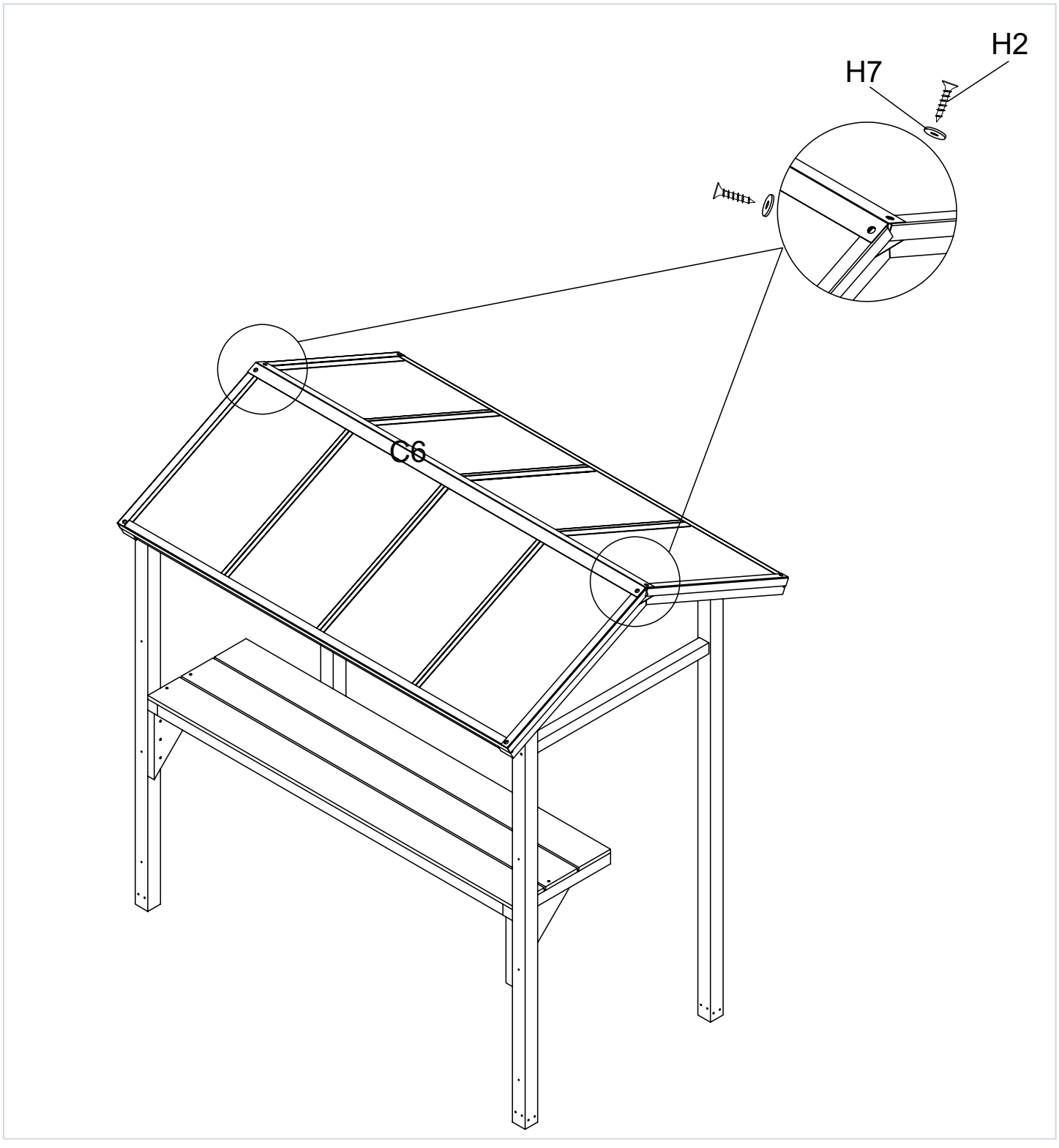

TIP: Align C6 with the roof/frame centerline before tightening.

22

SECURE THE PRE-INSTALLED C7 PLATES

Use H1 to fasten the C7 plates from Step 8 to the posts at the indicated locations.

PARTS: H1 x24 | C7 already installed in Step 8

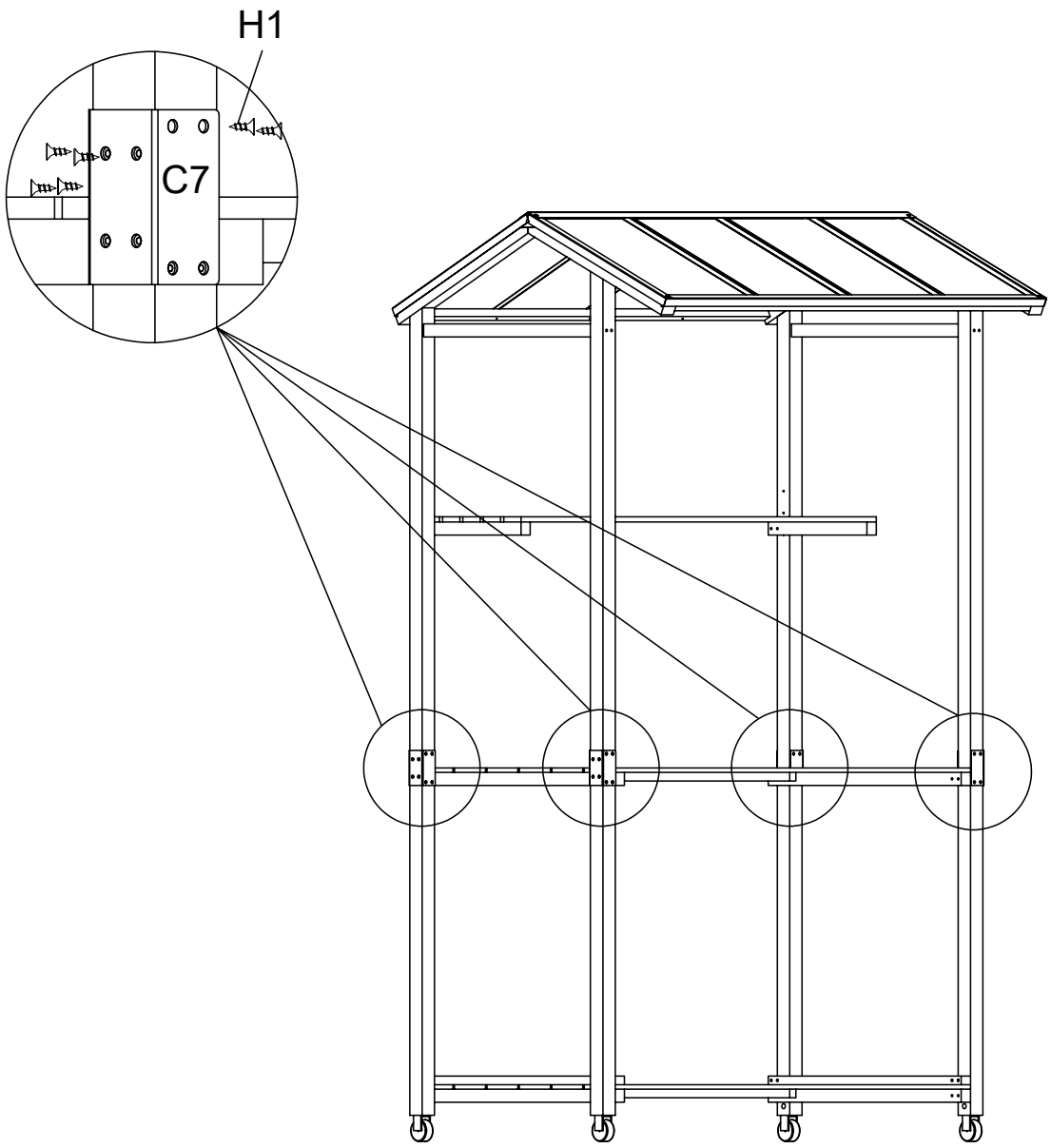

TIP: C7 is not a missing part in this step - it was installed earlier.

23

INSTALL THE FIRST F3 PANEL SECTION

Position the F3 section as shown and secure it with H2 and H7.

PARTS: F3 x1 | H2 x2 | H7 x2

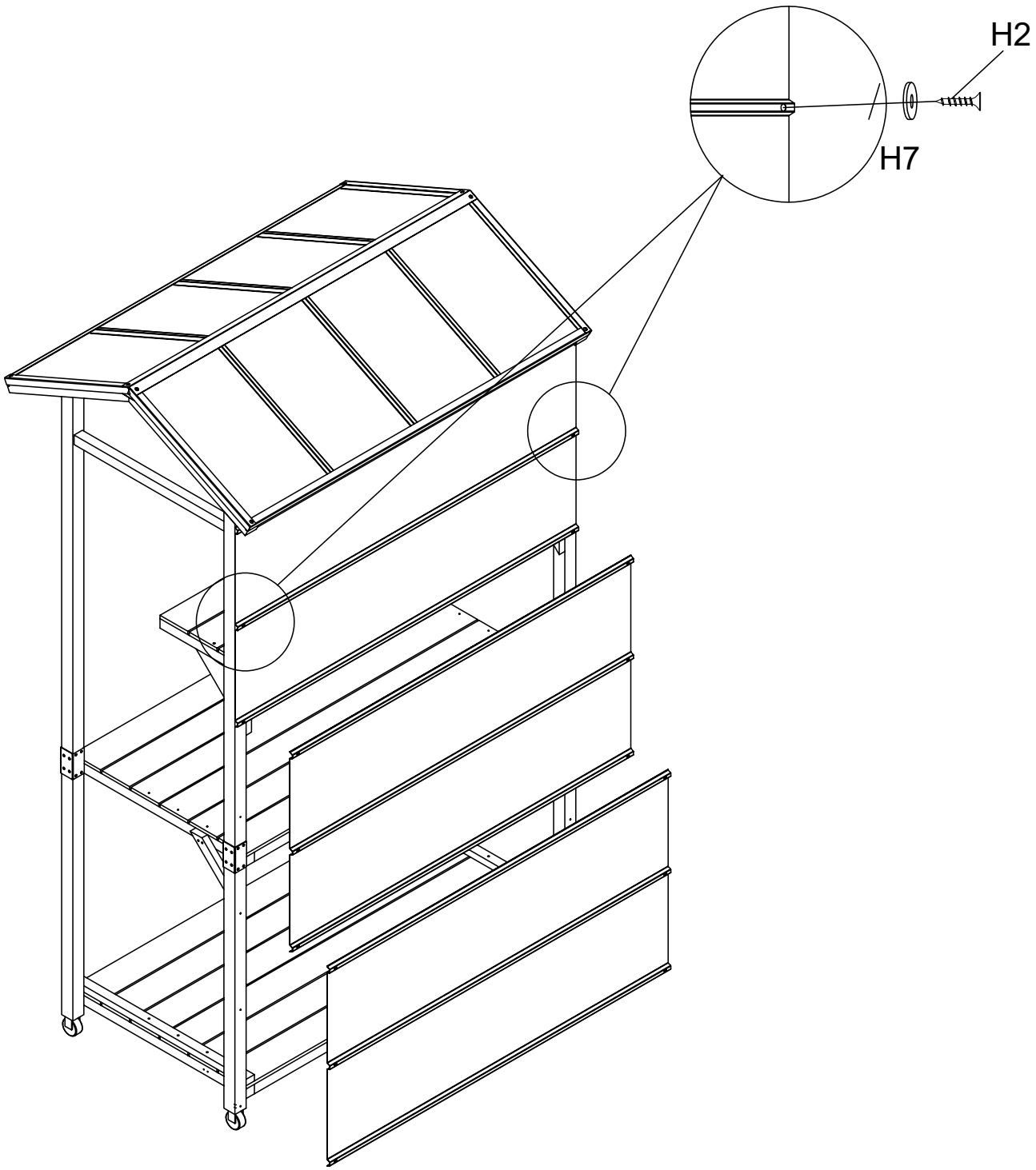

TIP: Confirm the front/back orientation before fastening the side panel section.

24

INSTALL THE REMAINING F3 SECTIONS

Position the remaining two F3 sections as shown and secure with H2 and H7.

PARTS: F3 x2 | H2 x4 | H7 x4

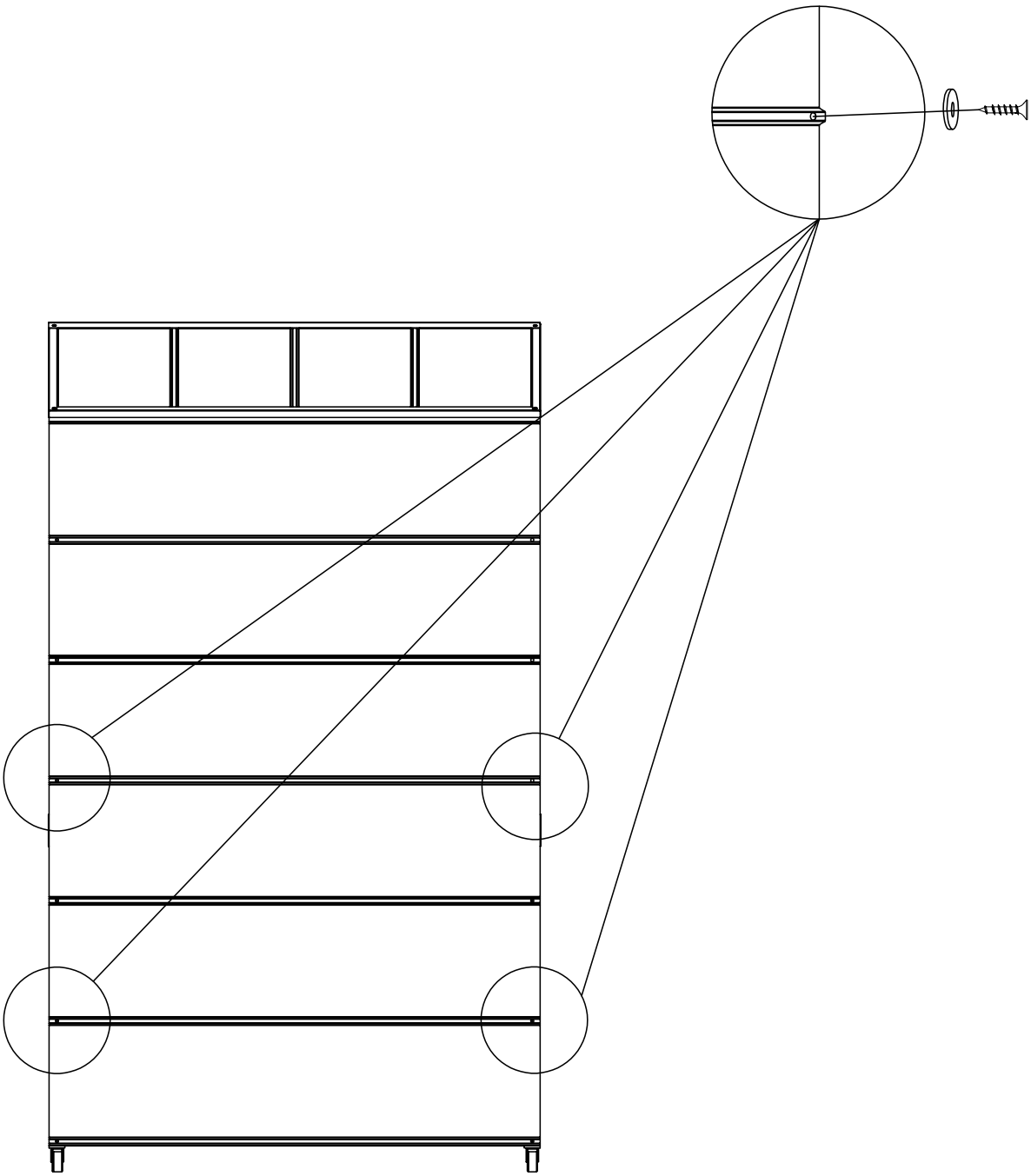

TIP: Keep all horizontal sections level and evenly spaced.

25

INSTALL THE C4 RAILS

Attach both C4 rails at the indicated side locations using H2 and H7.

PARTS: C4 x2 | H2 x2 | H7 x2

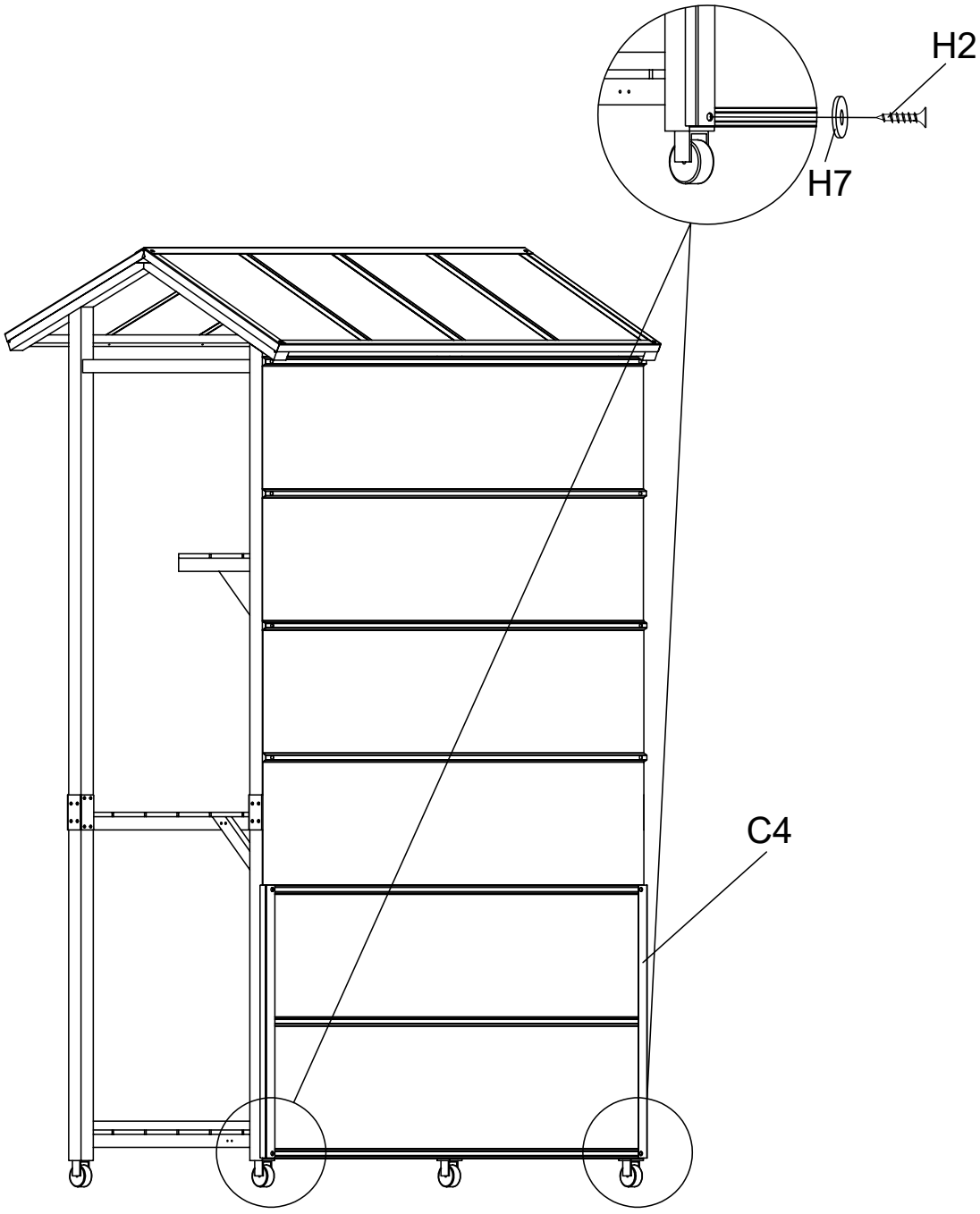

TIP: Match the side orientation shown before tightening.

26

INSTALL THE C5 RAILS

Attach both C5 rails at the indicated upper side locations using H2 and H7.

PARTS: C5 x2 | H2 x6 | H7 x6

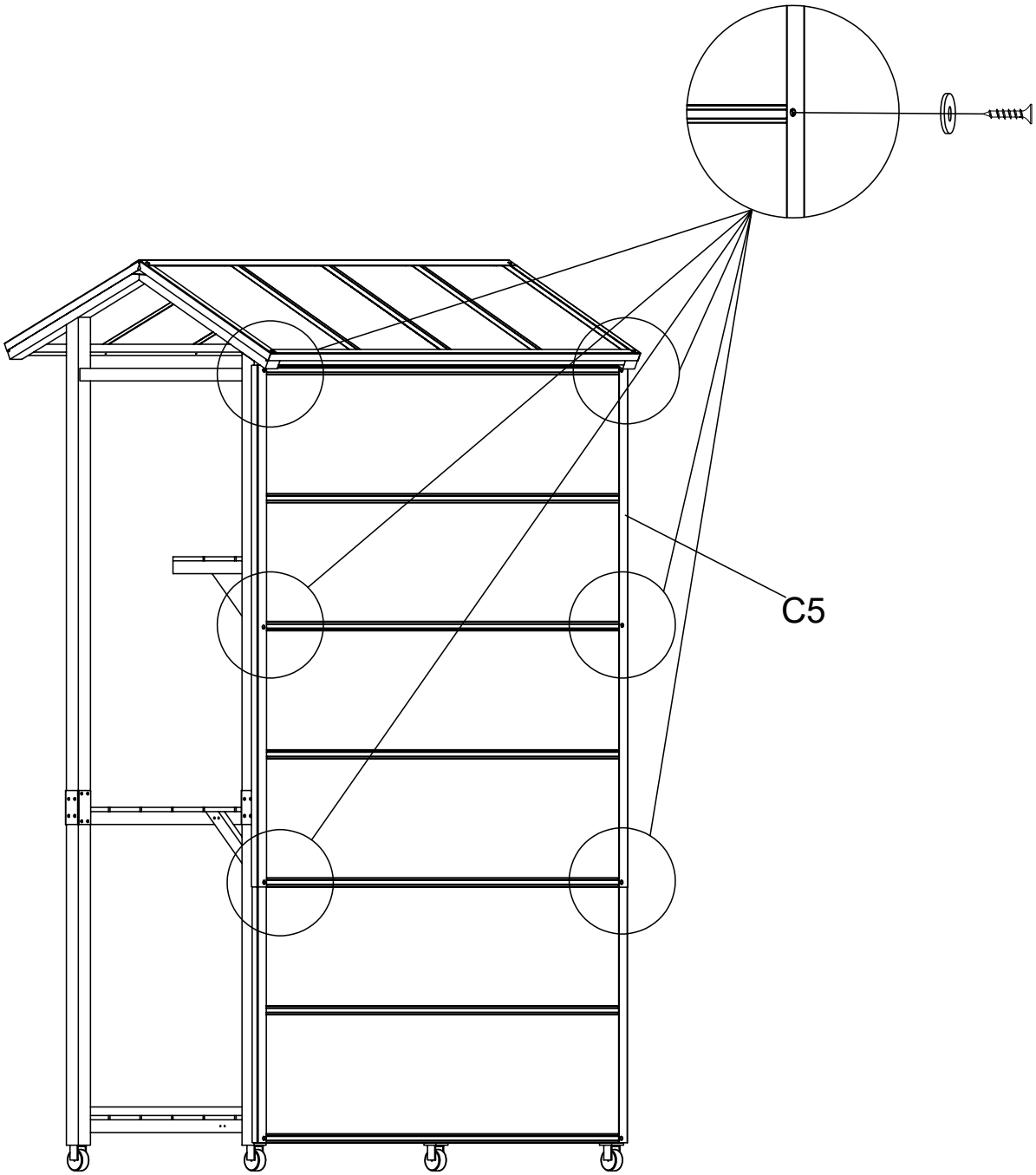

TIP: Keep C5 parallel with the other horizontal rails.

27

INSTALL THE H8 BRACKETS

Attach both H8 brackets with H1 at the indicated locations.

PARTS: H8 x2 | H1 x4

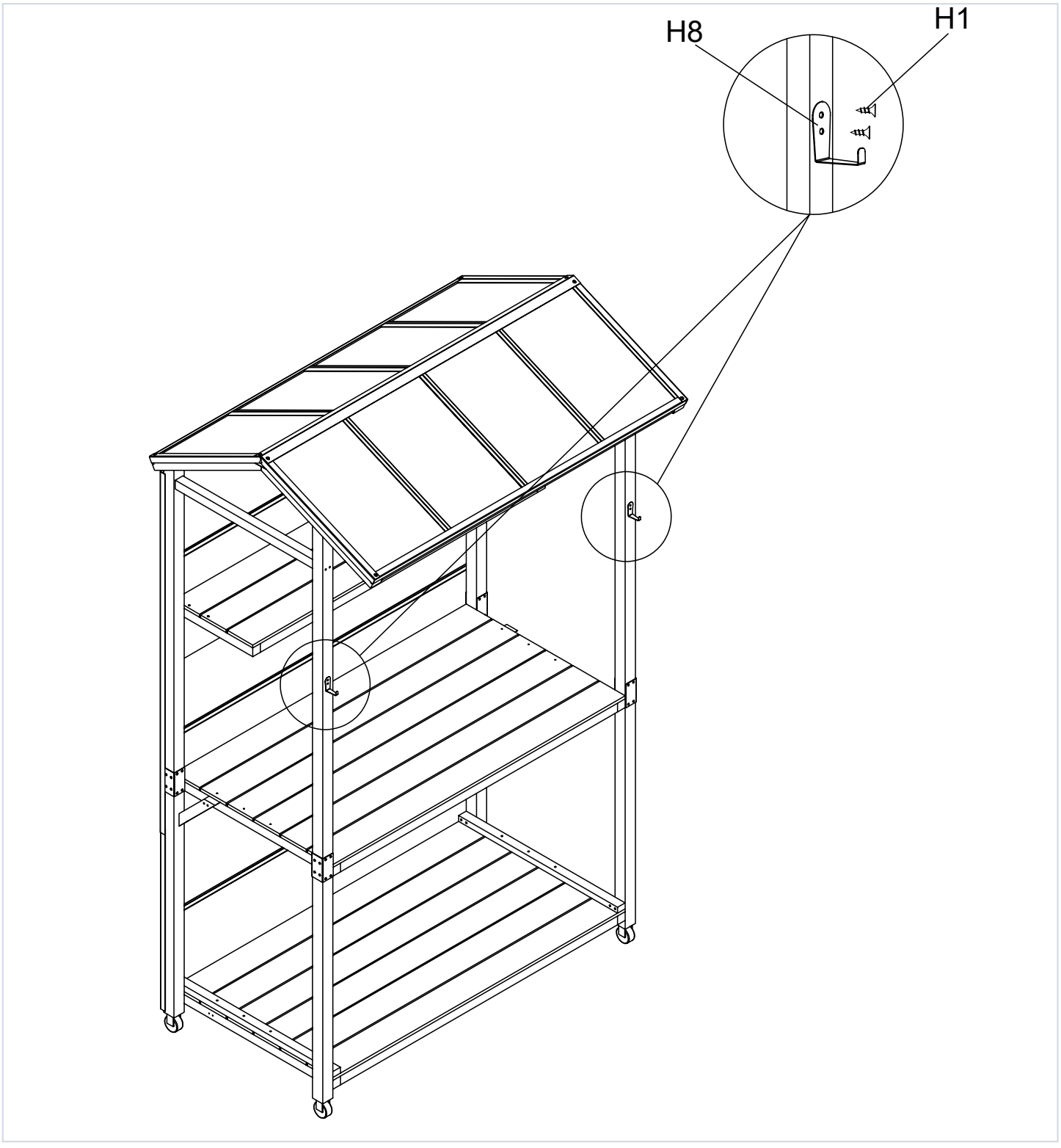

TIP: After this step, complete the Final Check on the next page.

FINAL CHECK & CARE

Complete this checklist before using the product.

CHECKLIST

- [ ] All screws and fasteners are installed and fully tightened.
- [ ] The frame is square, level and stable on the floor.
- [ ] The braked casters are locked during use.
- [ ] Roof panels and side rails are fully seated and aligned.
- [ ] No sharp edge, loose part or damaged component is exposed.
- [ ] The unit is not moved while heavily loaded.
- [ ] Fasteners will be checked and retightened periodically.

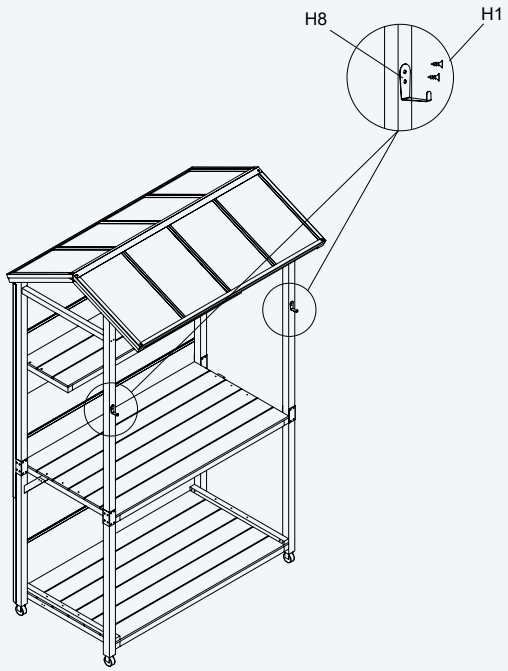

CARE NOTE

Keep the product clean and dry. Periodically inspect the frame, casters and fasteners. Replace damaged hardware before continued use.

Assembly complete. Keep this manual for future reference.