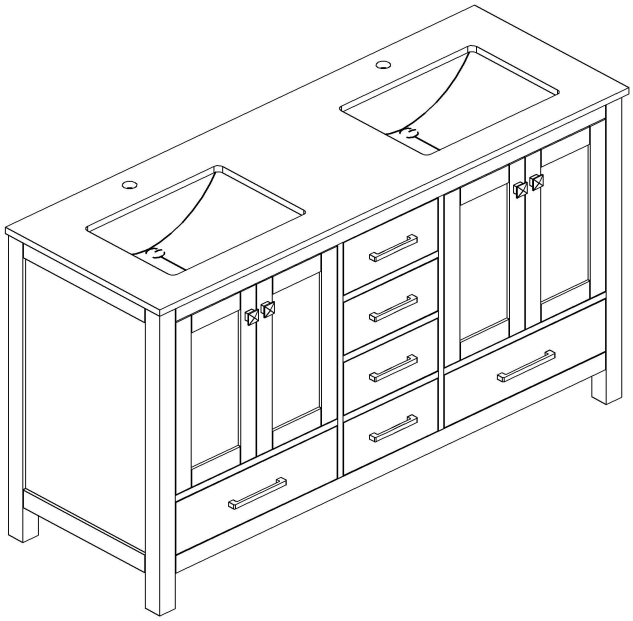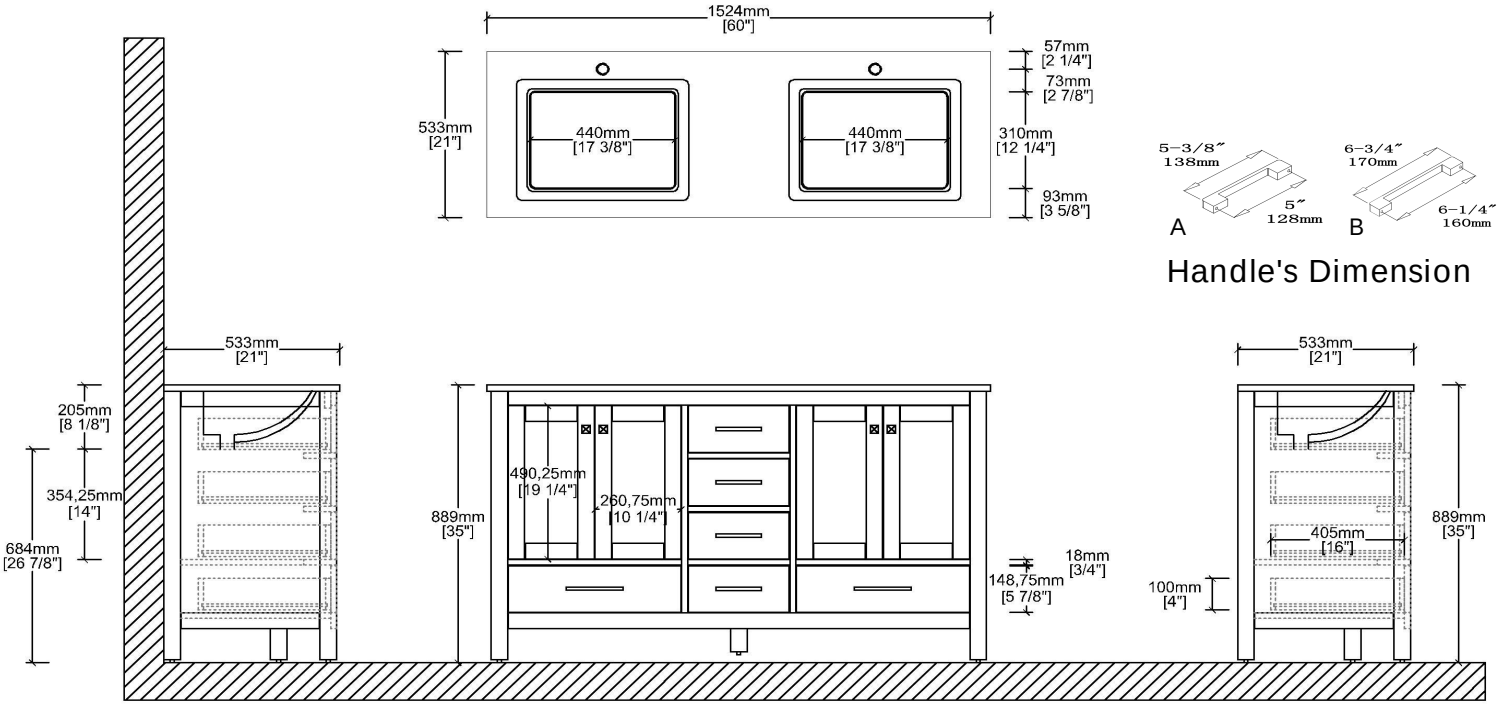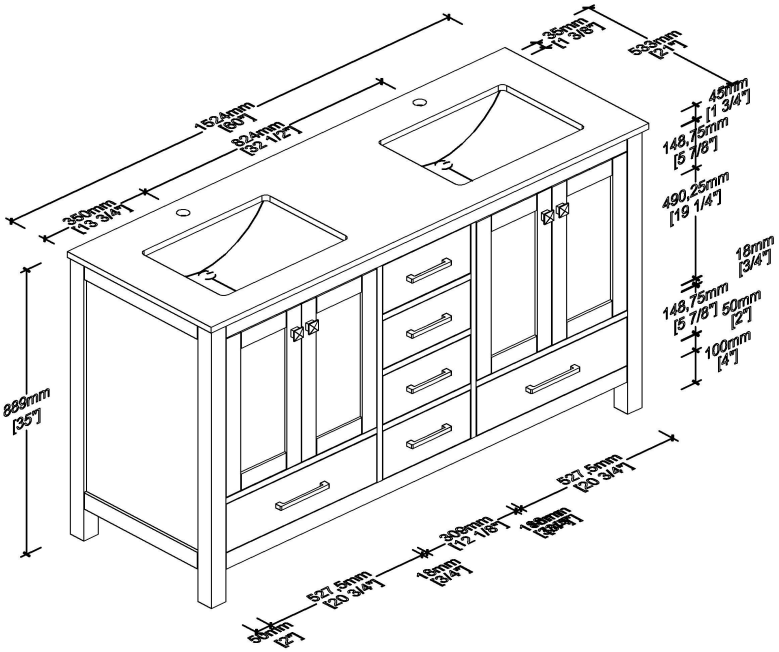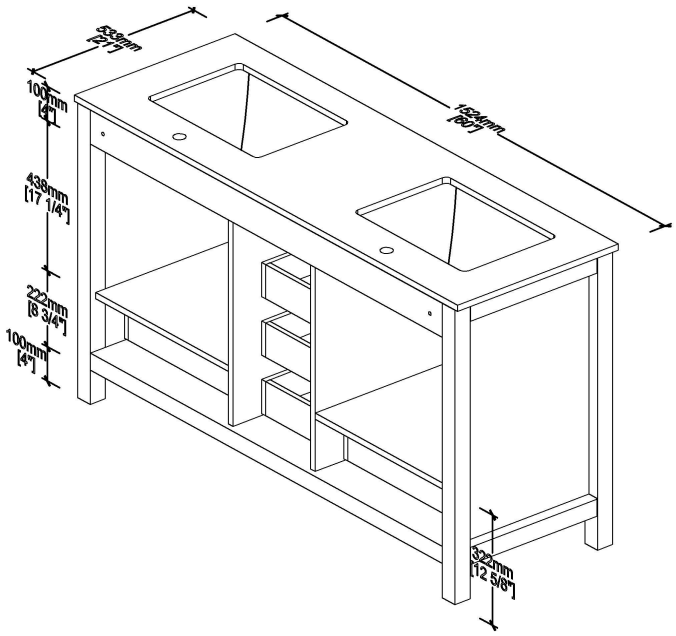Specifications & Dimension