DMOS

NH417420-WMR Single Mirror
Assembly Instructions

Step 1

Do not over tighten screws !

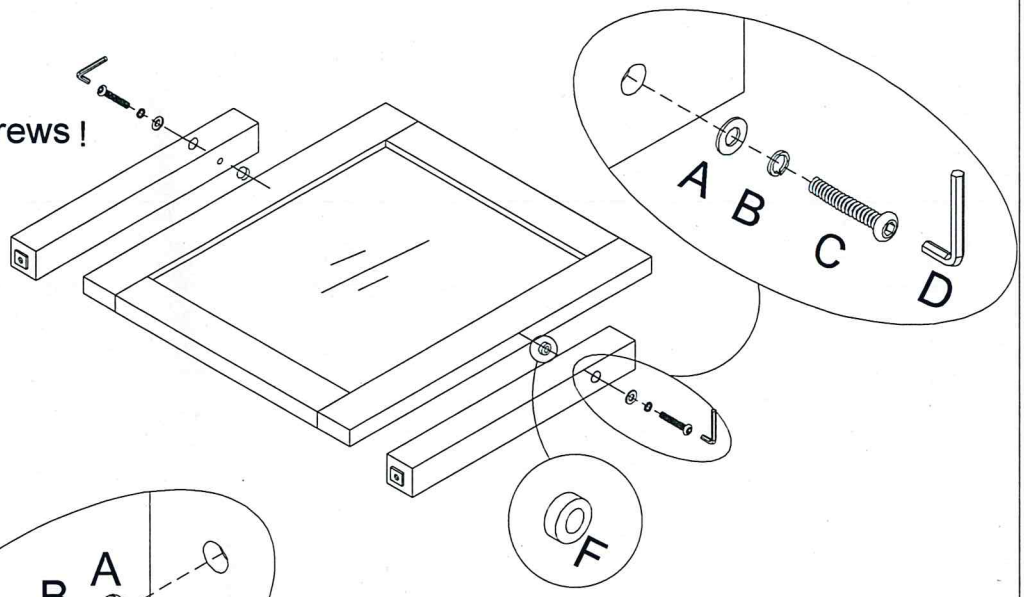

Step 2

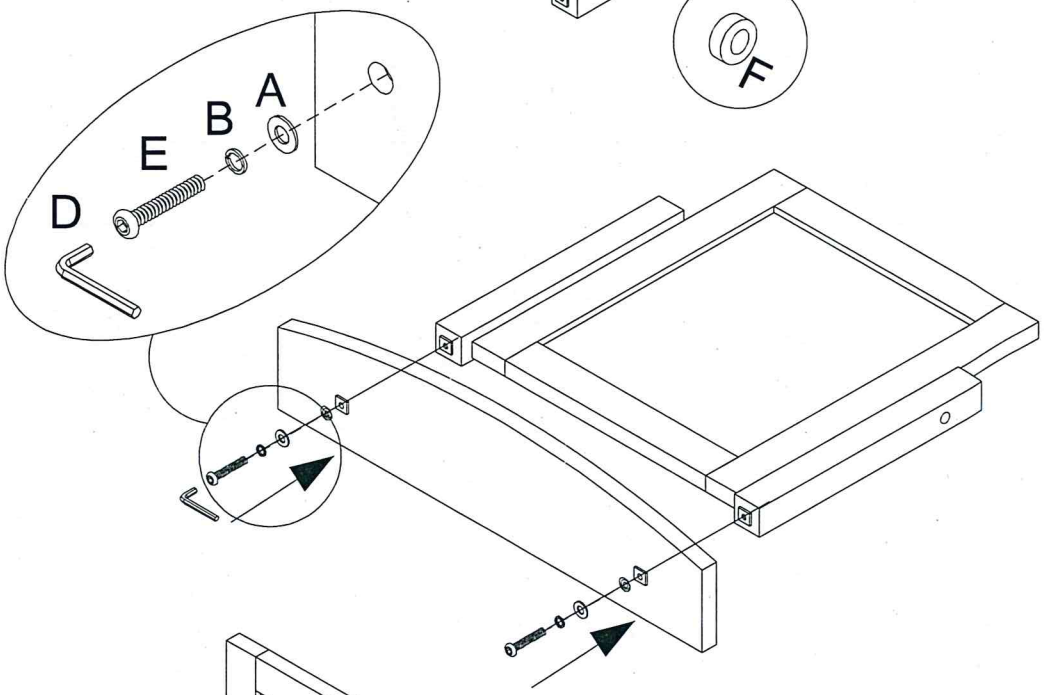

Step 3

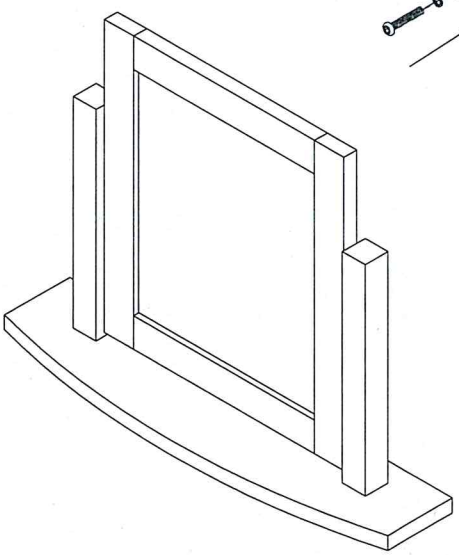

A 4PCS	B 4PCS	C 2PCS L=50mm	D 1PC	E 2PCS L=30mm
F 2PCS				