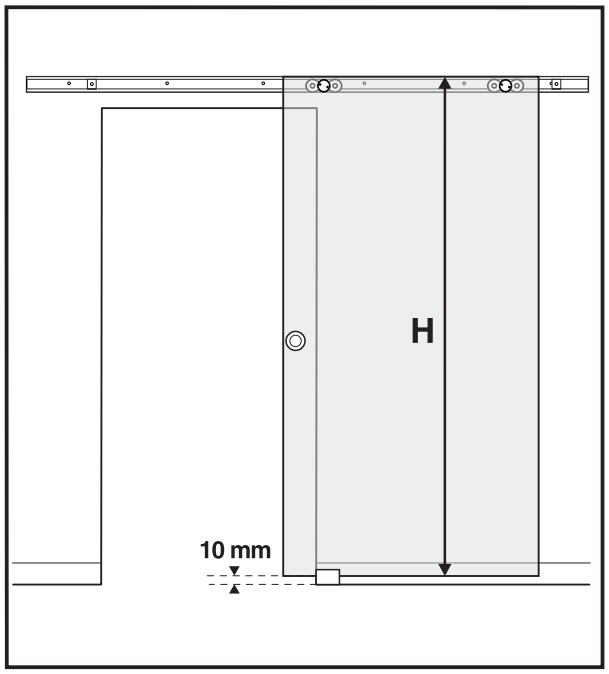
H
10 mm

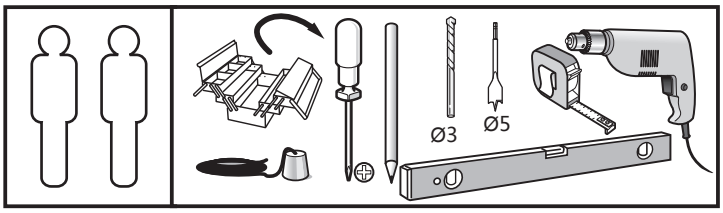
Ø3
Ø5

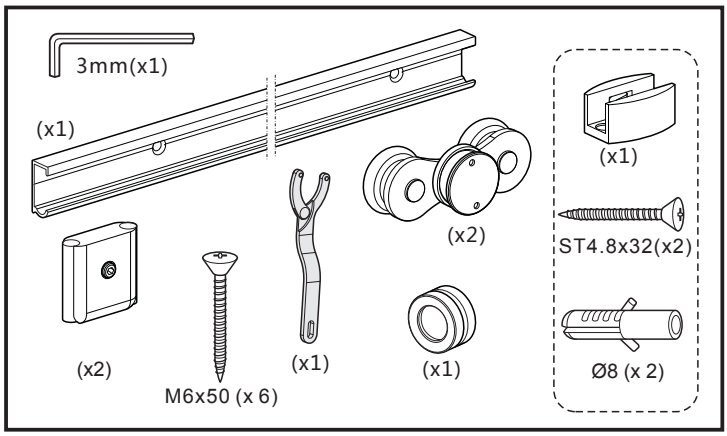
3mm(x1)
(x1)
(x2)
(x2)
M6x50 (x 6)
(x1)
(x1)
(x1)
ST4.8x32(x2)
Ø8 (x 2)

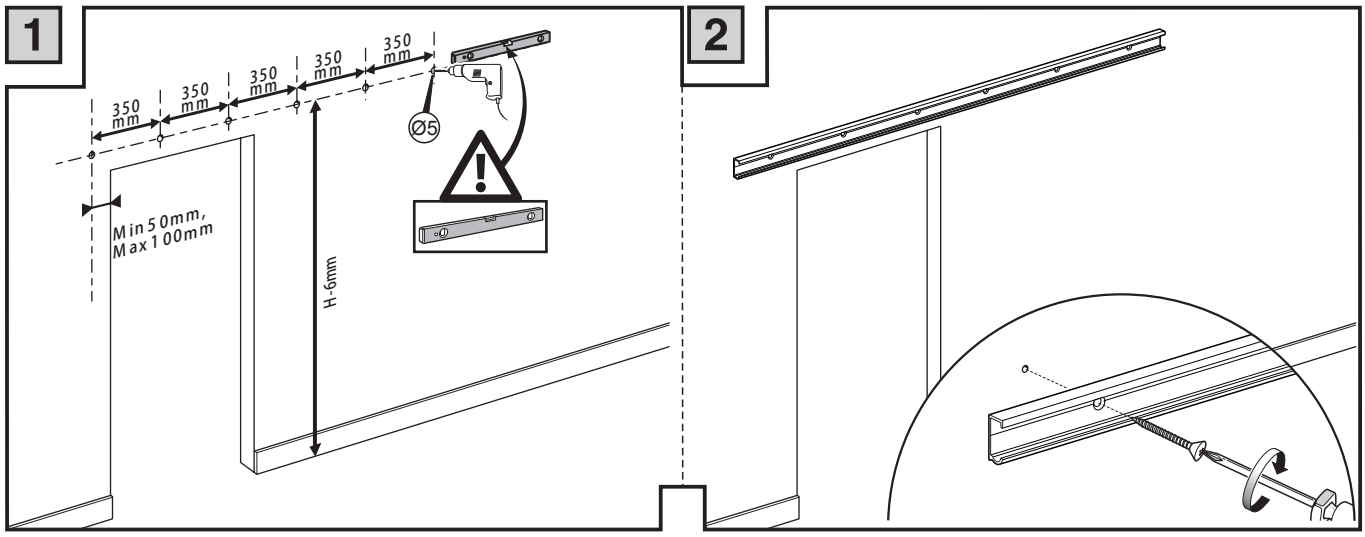
1
350 mm
350 mm
350 mm
350 mm
350 mm
Ø5
Min 50mm,
Max 100mm
H-6mm
2

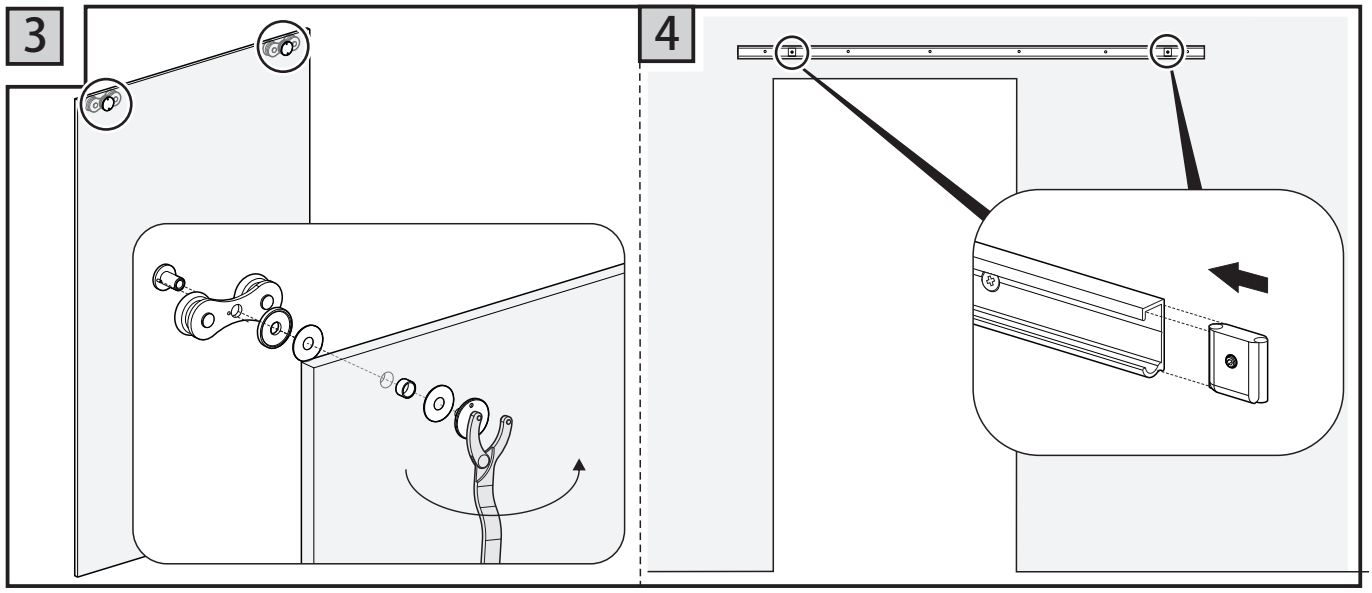
3
4

5

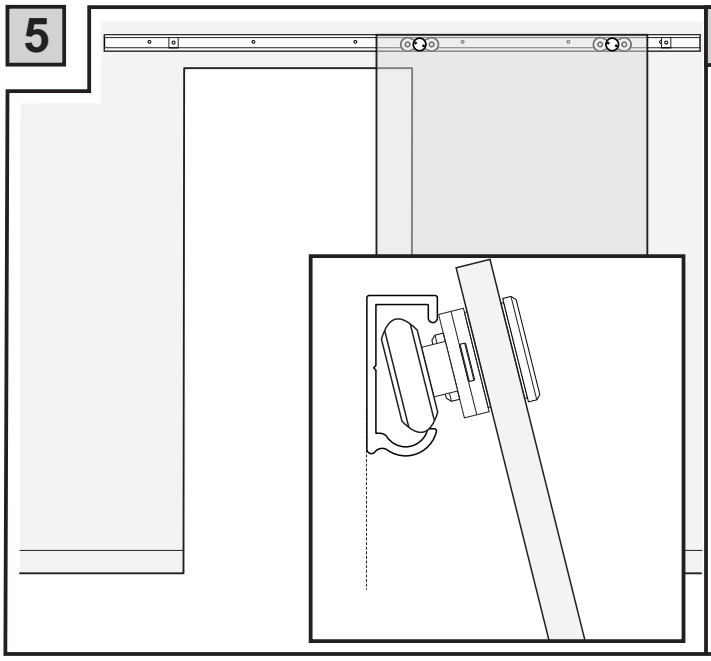

6

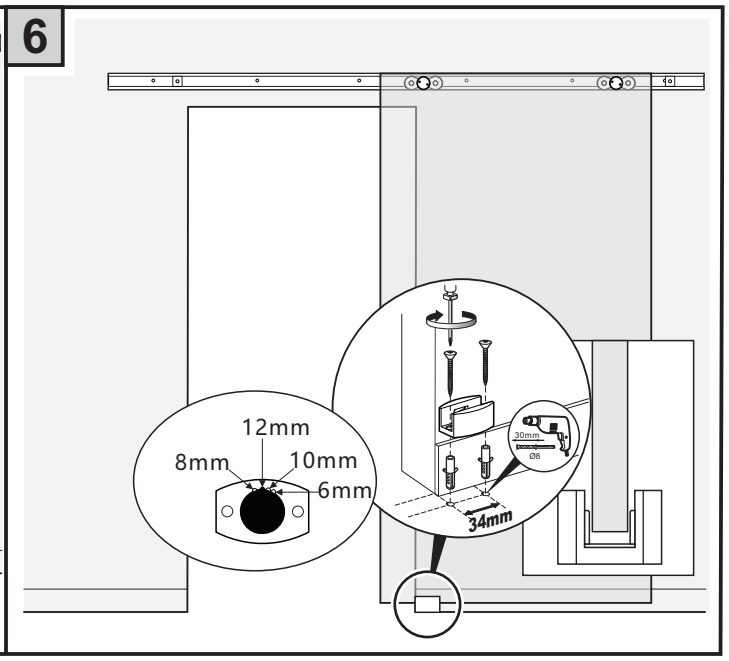
12mm
8mm
10mm
6mm
30mm
Ø8
34mm

7

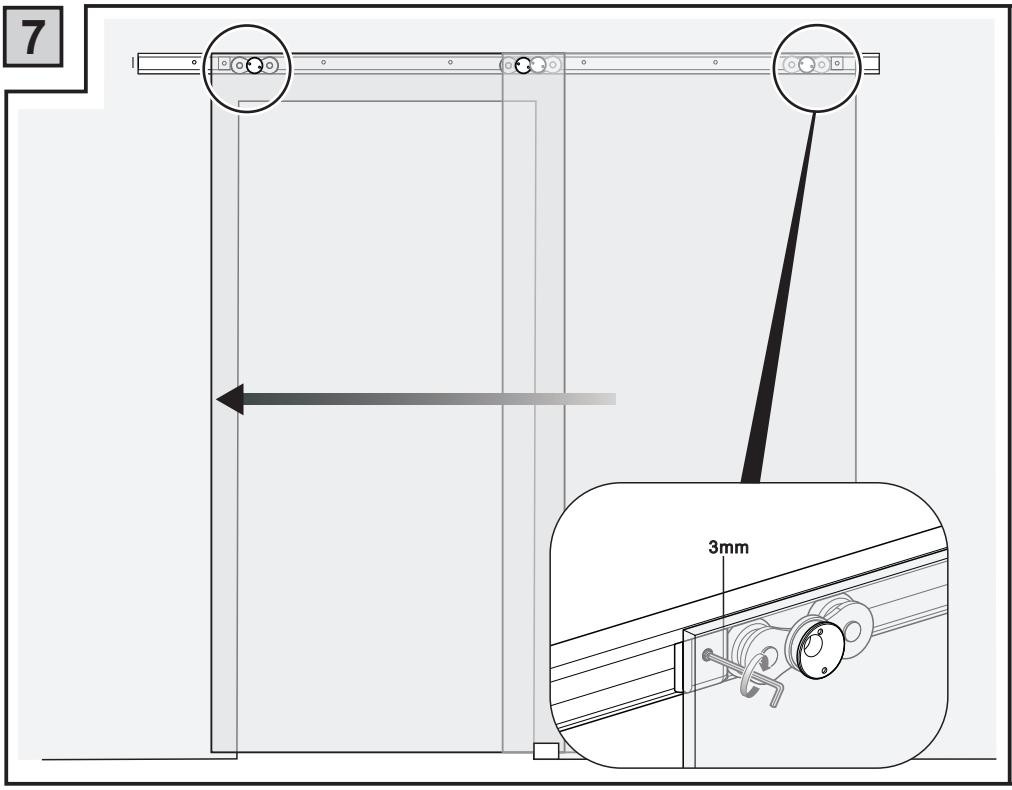
3mm

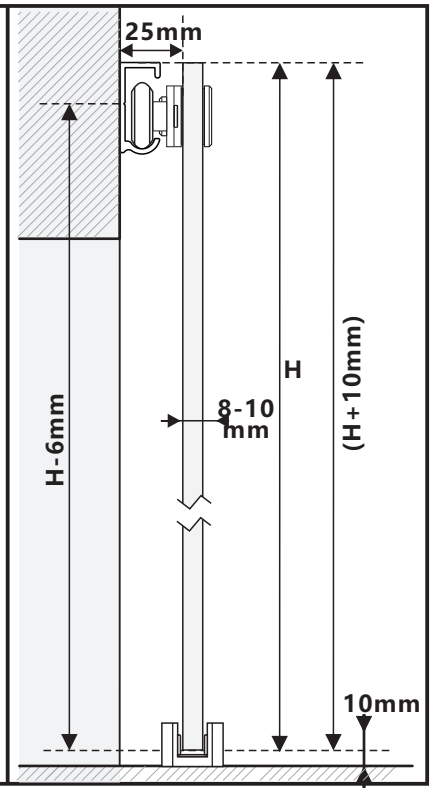
25mm
H-6mm
8-10
mm
H
(H+10mm)
10mm
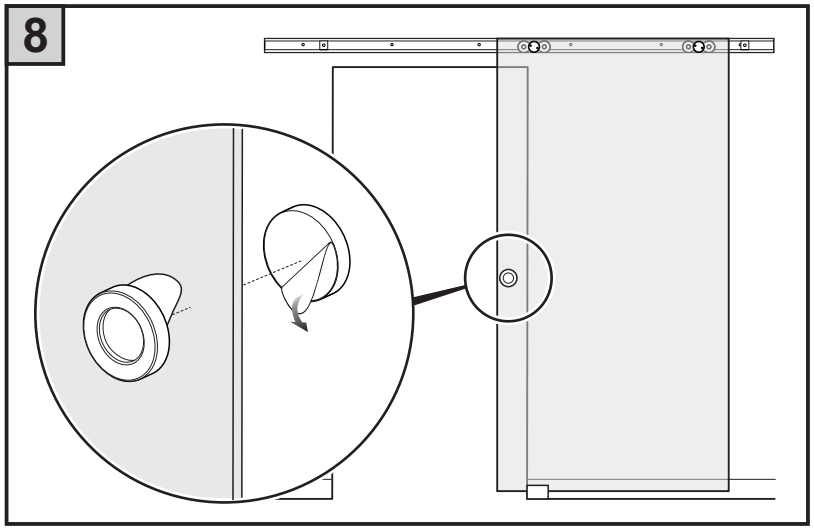
8