ASSEMBLY INSTRUCTIONS
ITEM:MAX6001

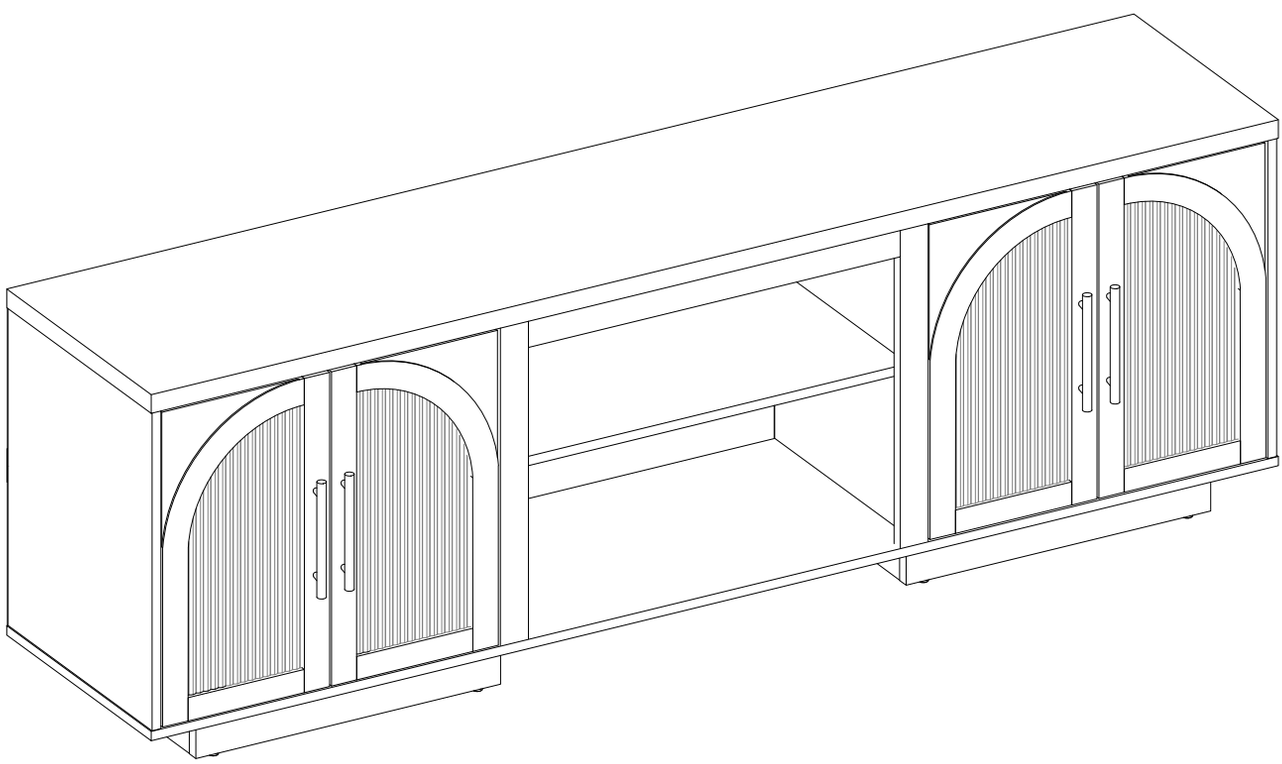

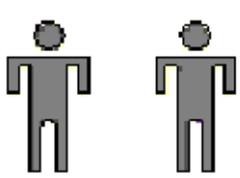

2 people for assembly

support@solacefurniture.com

PARTS INCLUDED

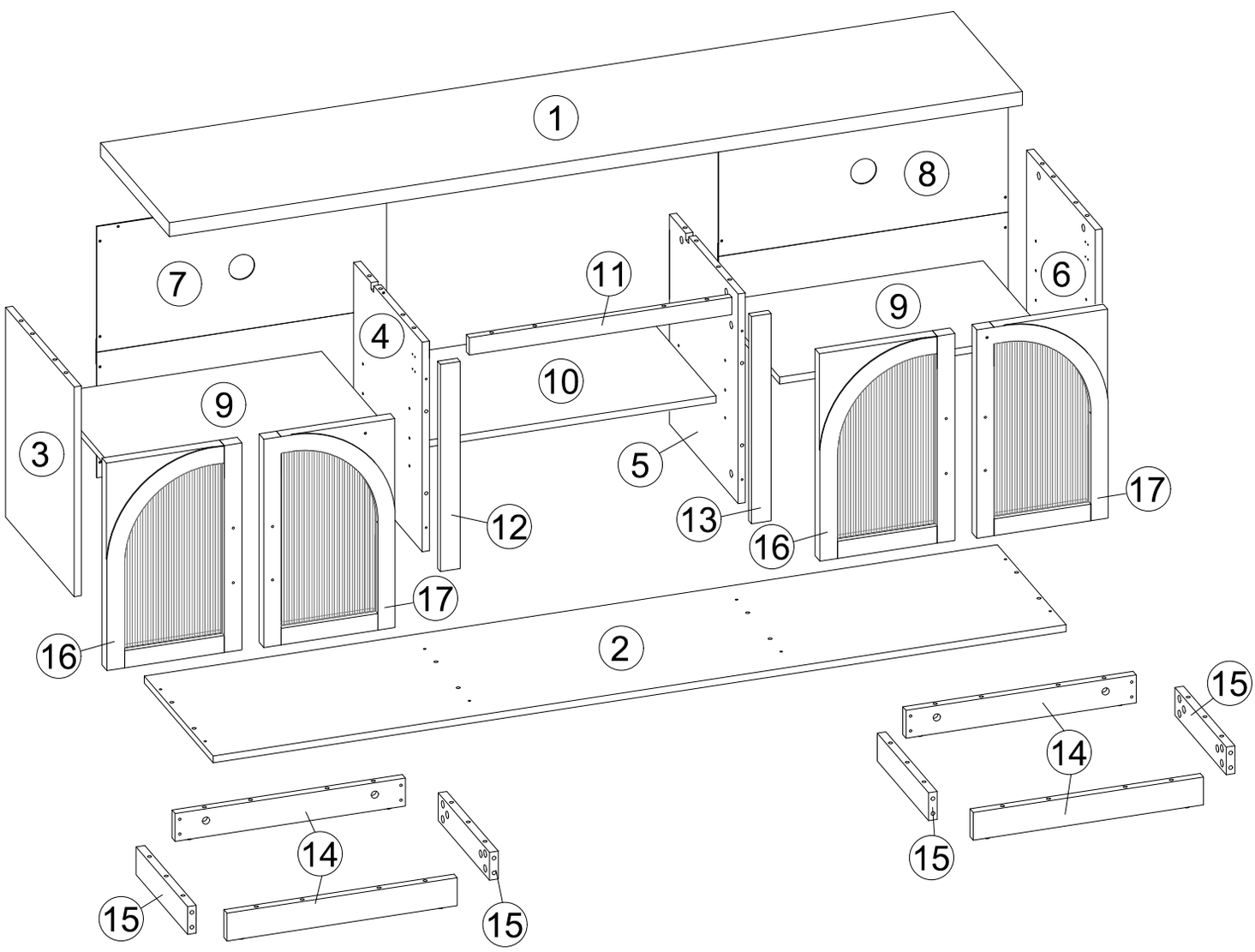

HARDWARE INCLUDED

ϕ7.8X30MM 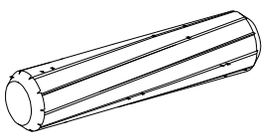 A 34X+1	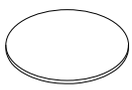 B 8X+1	ϕ6X34MM  C 46X+2	ϕ15X12MM  D 46X+2
ϕ5/32"X22MM 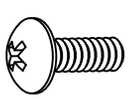 E 8X	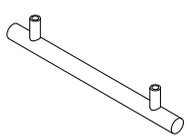 F 4X	ϕ4X50MM 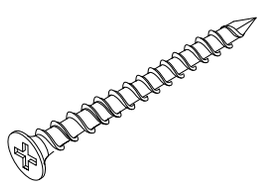 G 8X+1	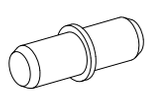 H 12X
ϕ3.5X15MM 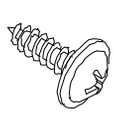 I 32X+1	 J 1X	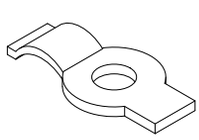 K 5X+1	ϕ3X10MM Included In Insert Screws 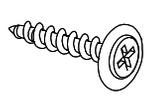 L 5X+1
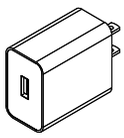 M 1X	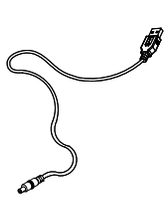 N 1X	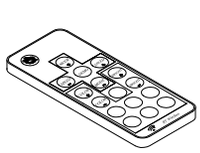 Remote Control O 1X	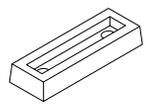 P 2X
ϕ3X15MM 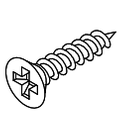 Q 4X+1	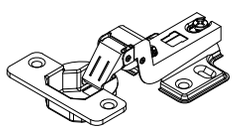 R 8X	ϕ4X14MM 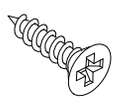 S 48X+2	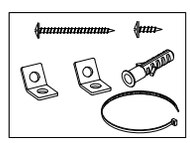 T 2X

HOW TO USE THE CAM LOCK SYSTEM

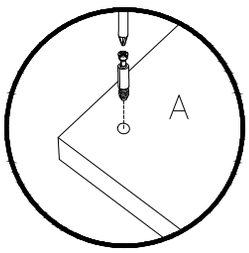

1. Screw the cam bolt into the panel.

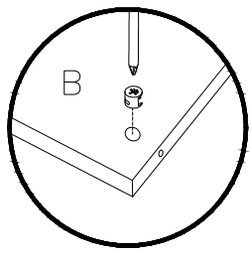

2. Insert the cam lock with the arrow pointing toward the panel edge.

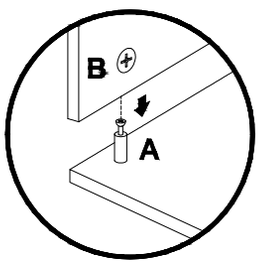

3. Align the cam bolt with the cam lock and fully insert it into the cross-bored hole.

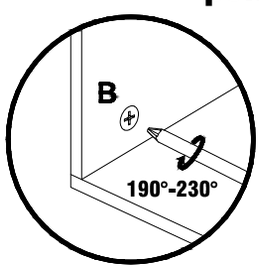

4. Turn the cam lock clockwise 190-230 degrees to secure the panels.

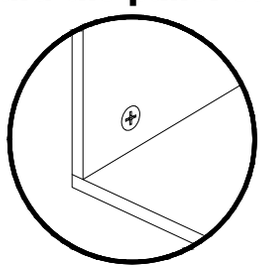

5. Confirm the panels are tight and the joint is rigid.

Insert wood dowel (A) at least halfway. Tap lightly with a rubber mallet only if necessary.

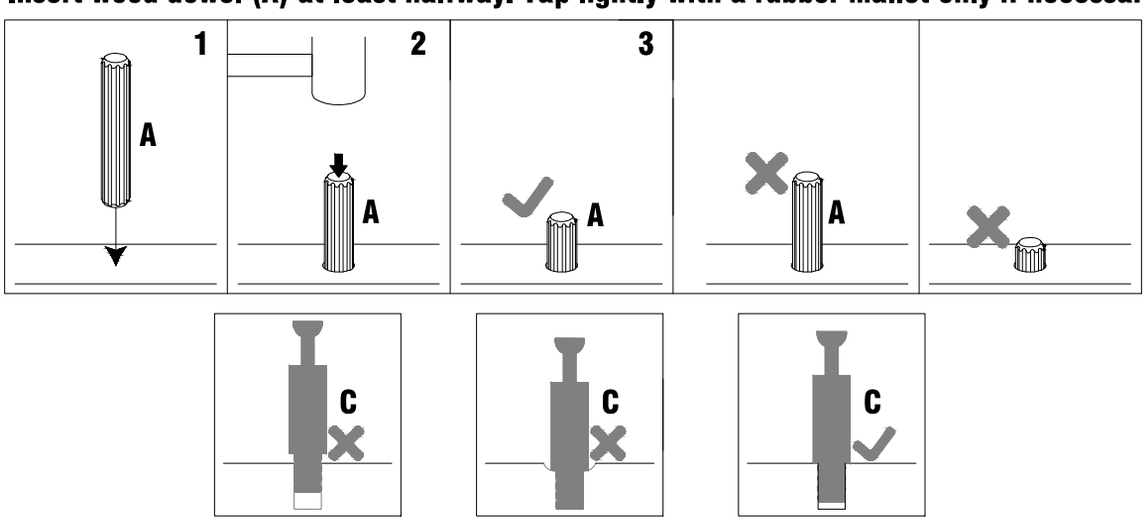

⚠ WARNING

- Place the unit on a level surface; use the included levelers when applicable.
- Do not sit or stand on the unit, and do not allow children to climb on it.
- Install the anti-tip restraint and secure the unit to the wall before use.
- A tipping unit can cause serious injury or death.
- Do not exceed the stated weight limits.
- Distribute weight evenly and place heavier items on lower shelves.
- Before drilling, verify the locations of electrical wiring, plumbing, and gas lines.

ASSEMBLY OVERVIEW

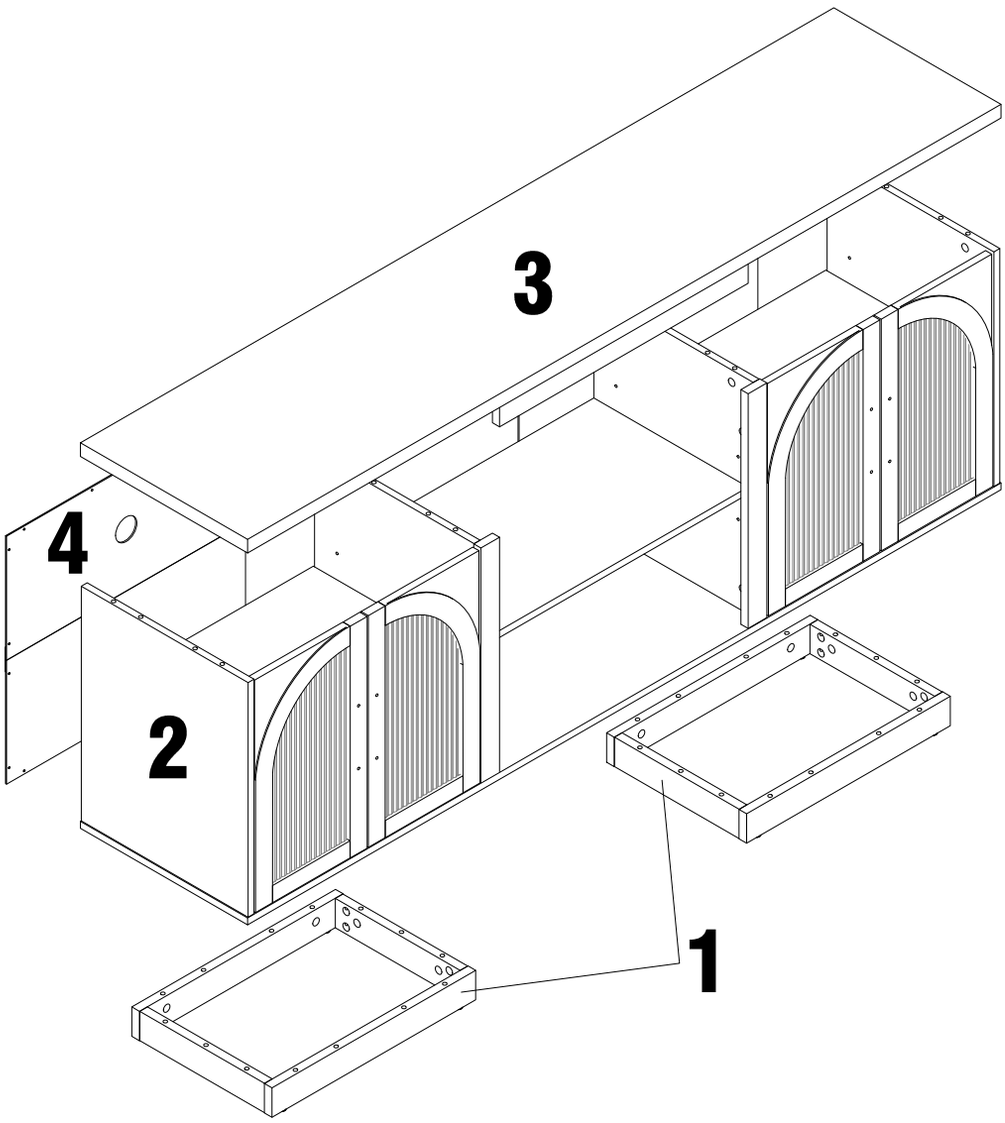

ASSEMBLY SEQUENCE

1. Assemble the base frames.
2. Assemble the cabinet body.
3. Attach the top panel.
4. Attach the back panel.

BEFORE YOU BEGIN

- Two adults are required for safe assembly.
- Use a Phillips screwdriver. A low-torque electric screwdriver is optional.
- Assemble on a clean, soft surface.
- Check all parts and hardware before starting.
- Secure the completed unit to the wall before use.

STEP 1 Start with the installation of the two bases.

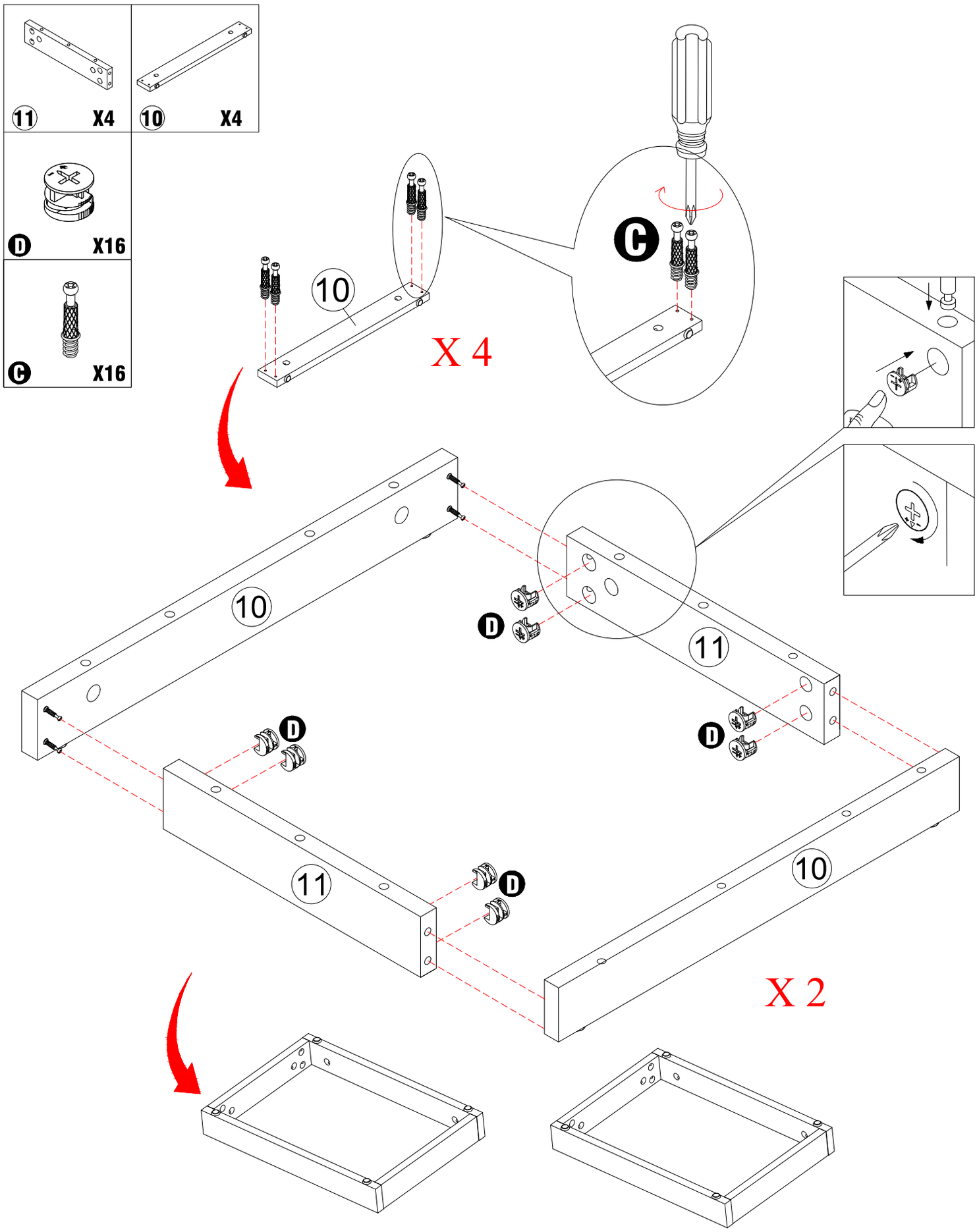

Component Drawing After Safety Completion

STEP 2 Install the combiner screw into Bottom Panel #2 .

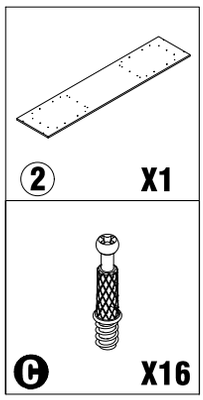

STEP 3 Insert the wooden dowel into the hole on Bottom Panel #2 .

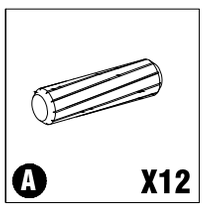

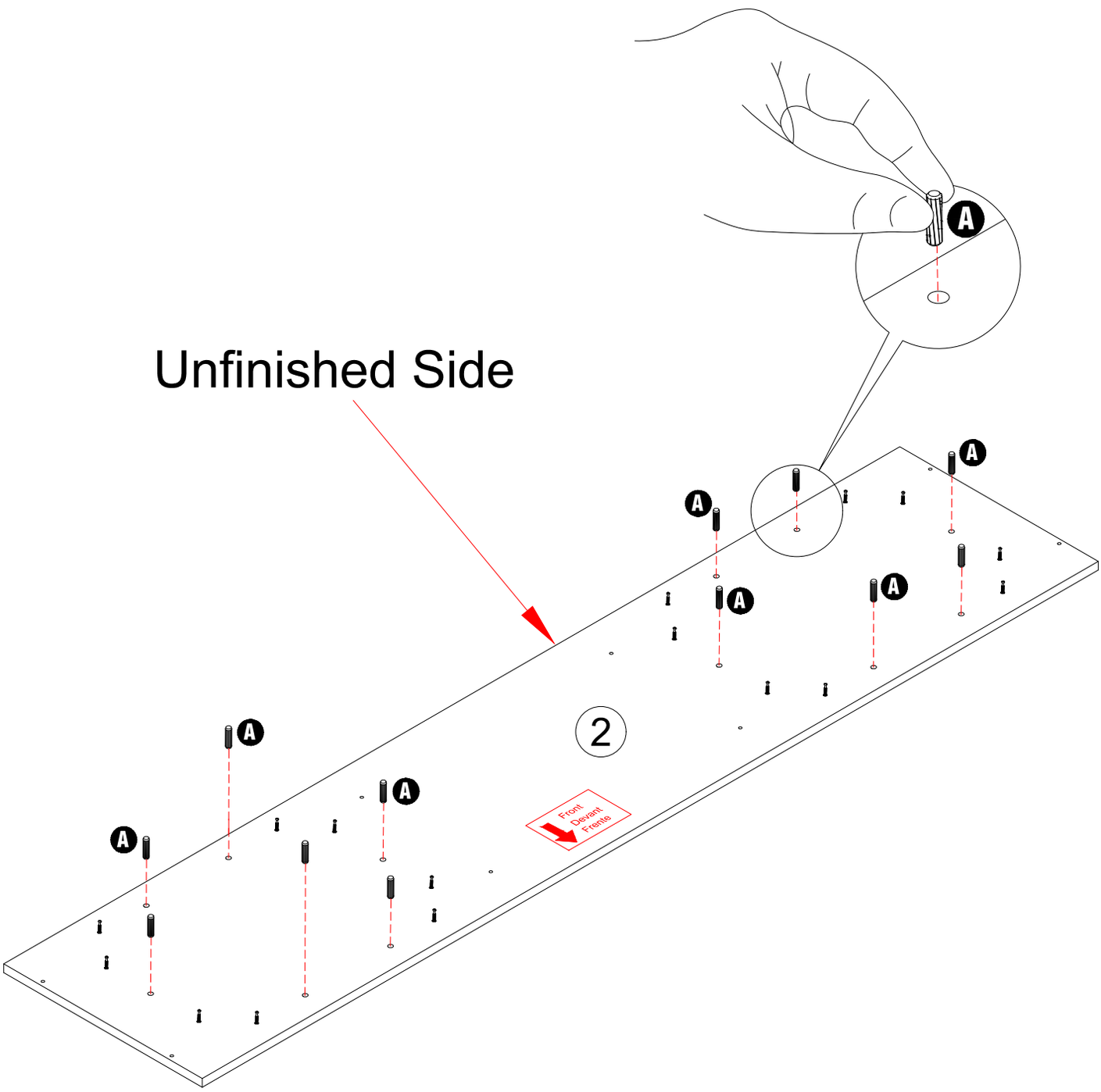

STEP 4 Secure the base to Part #2 with the combiner cap.

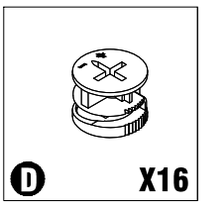

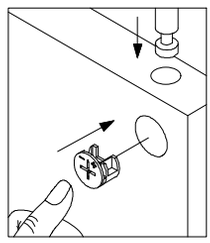

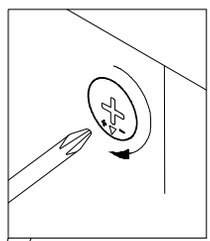

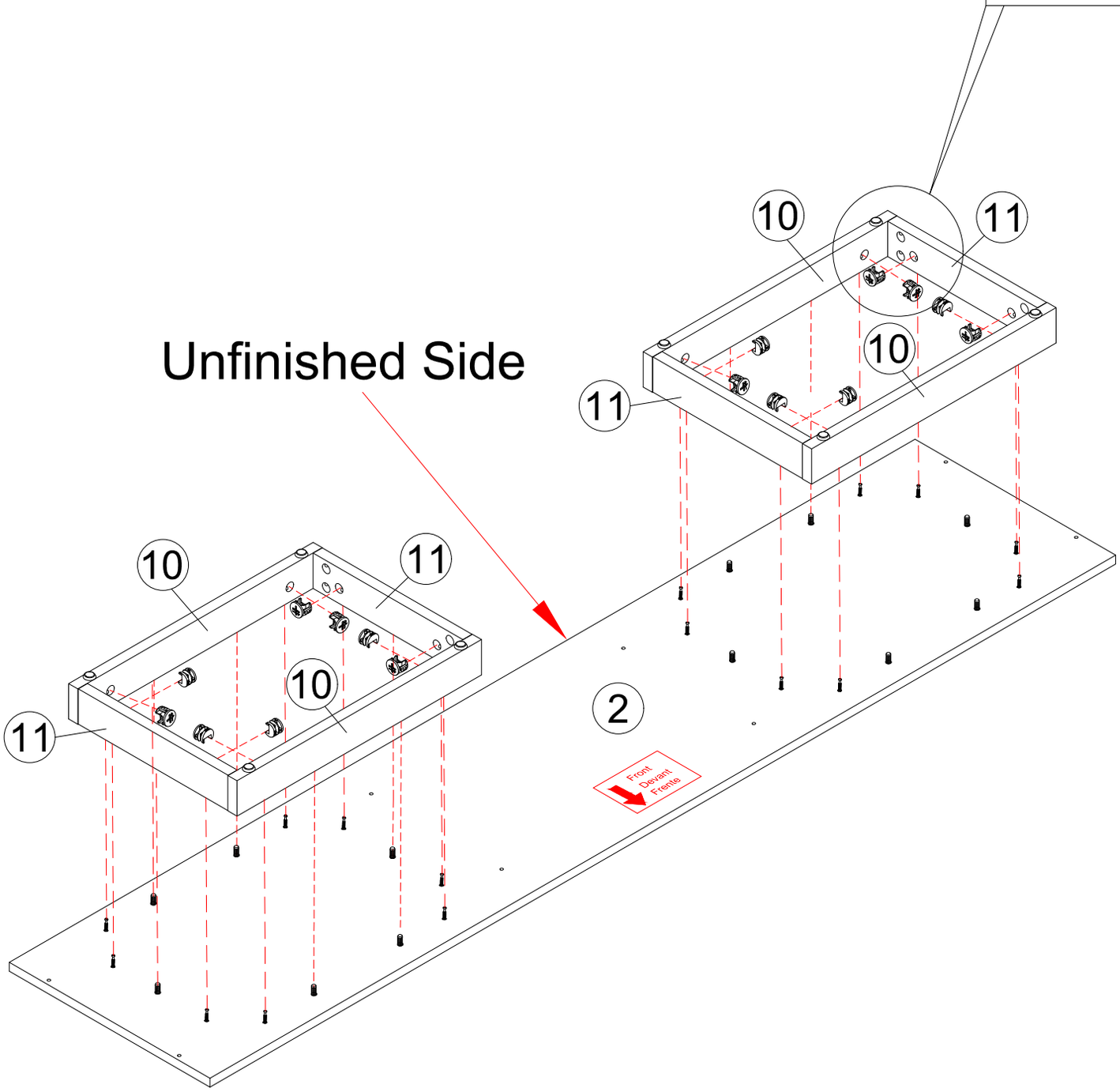

STEP 5 Assemble the vertical center panels (Part #4 & #5) with the support rails (Part #12 & #13).

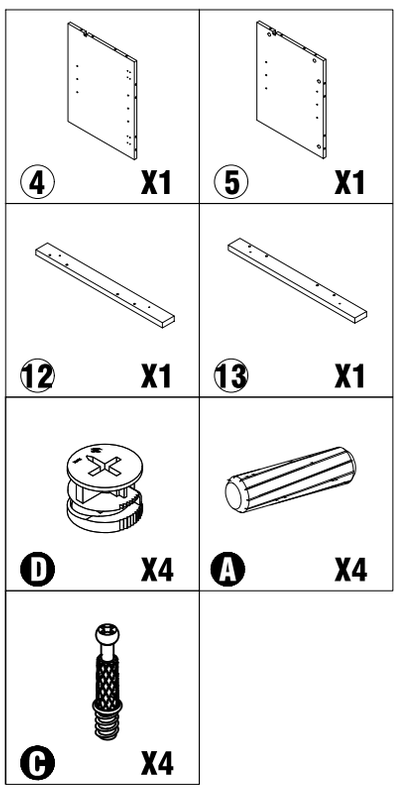

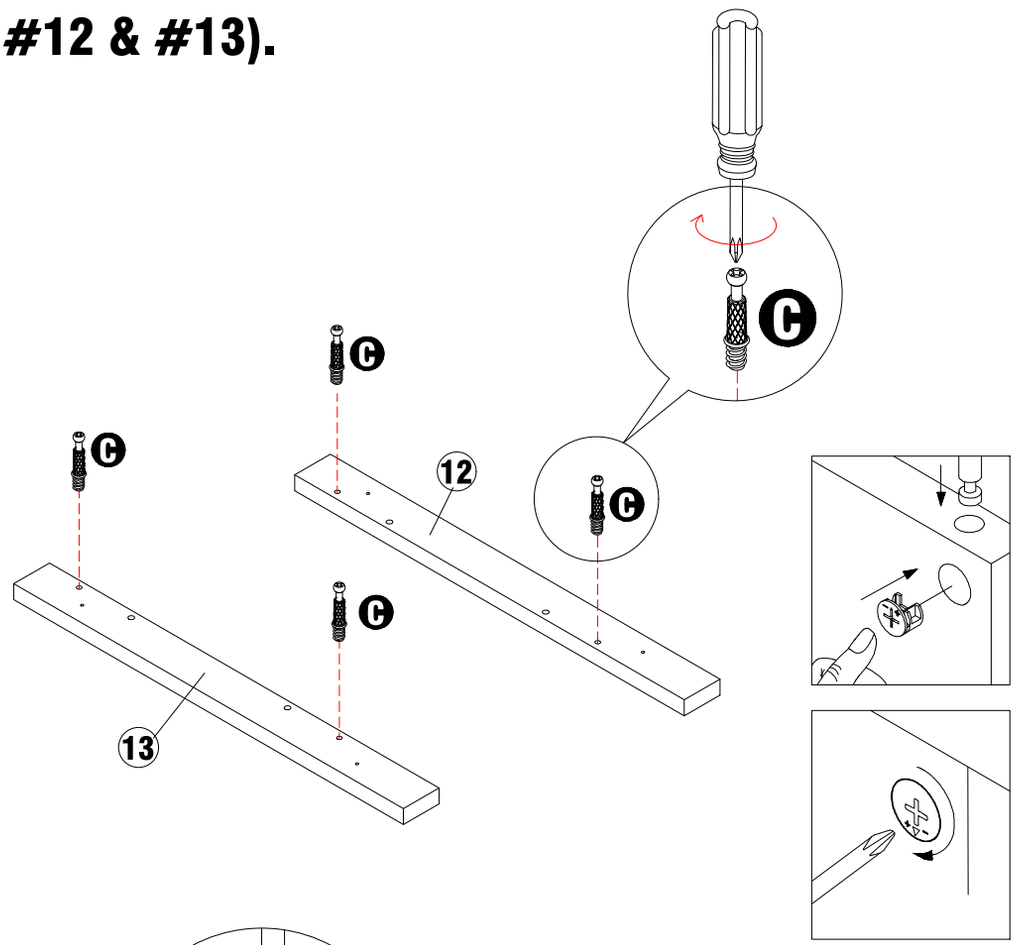

Pay attention to the notch and polarity markings when installing the component.

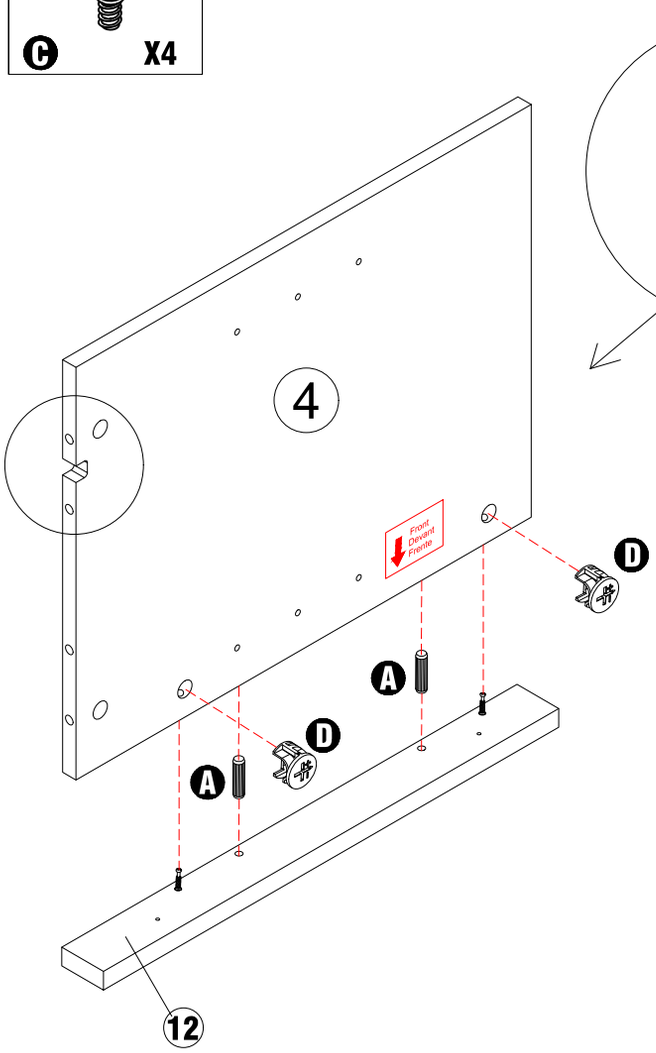

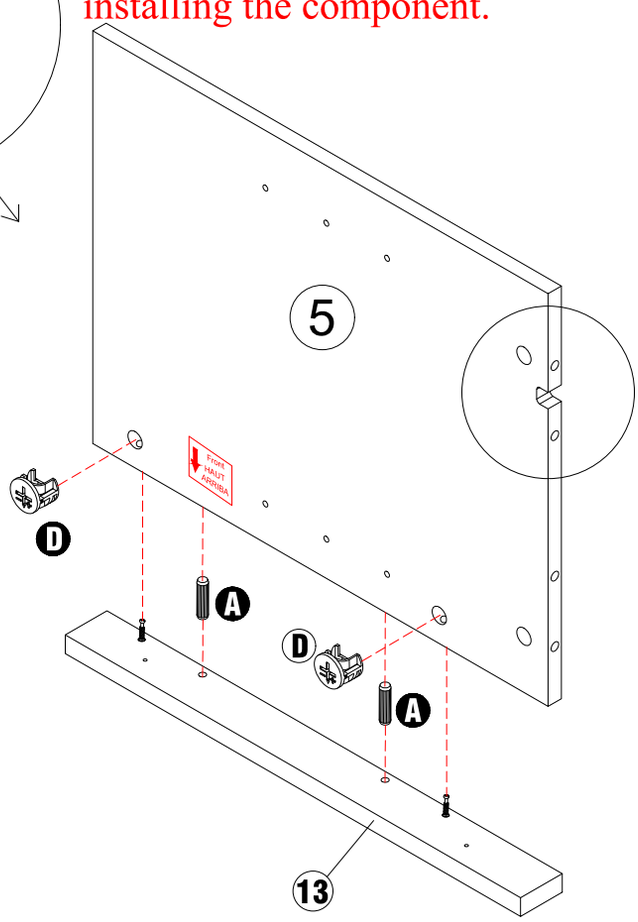

STEP 6 Assemble Parts #3–#6 to the bottom component.

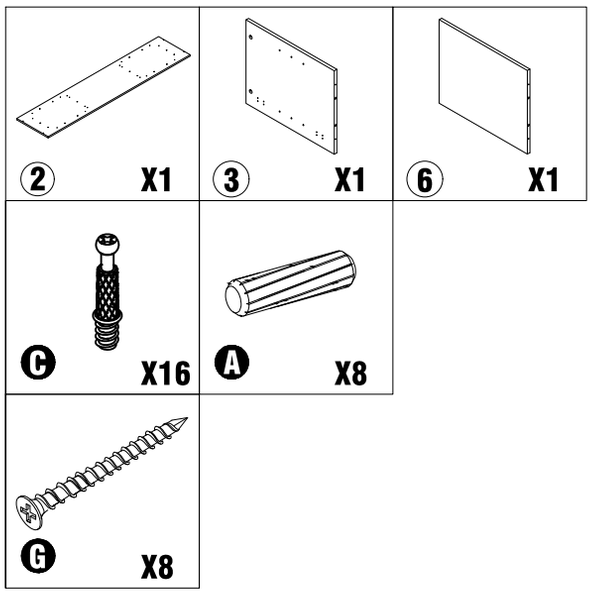

Component Drawing After Safety Completion

STEP 7 Assemble the LED light strip (#J), plastic door stop (#P), and combiner screw (#C) with the top panel (#1).

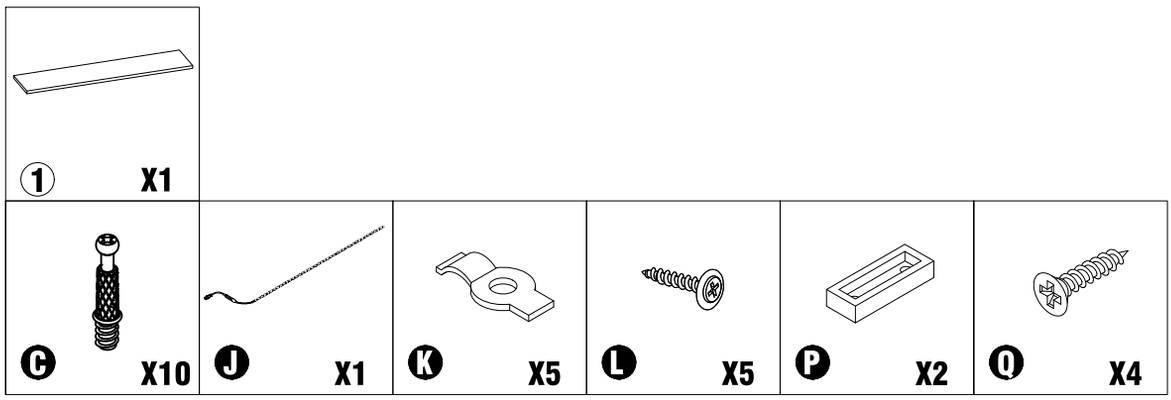

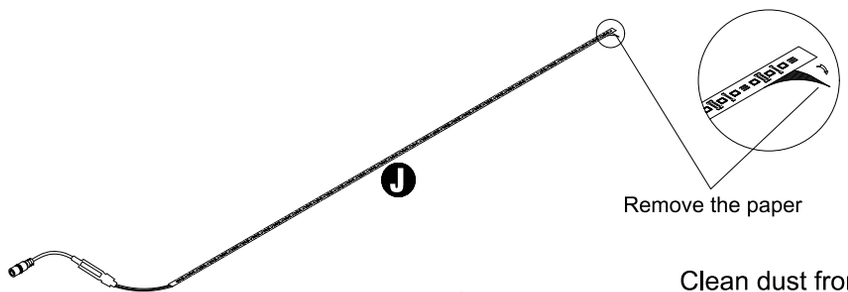

Clean dust from the panel surface before applying the LED light strip.

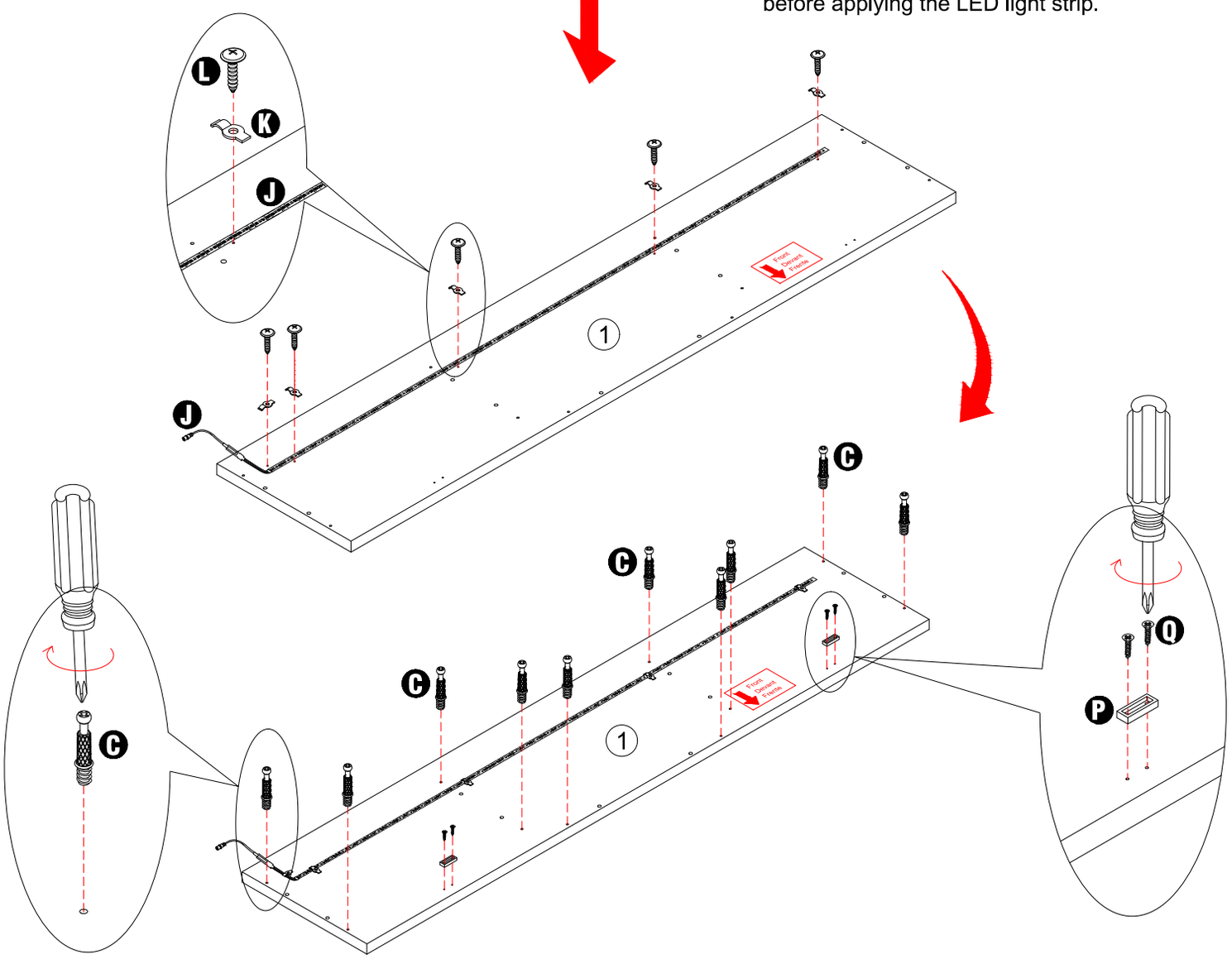

STEP 8 Assemble Part #11 to Part #1.

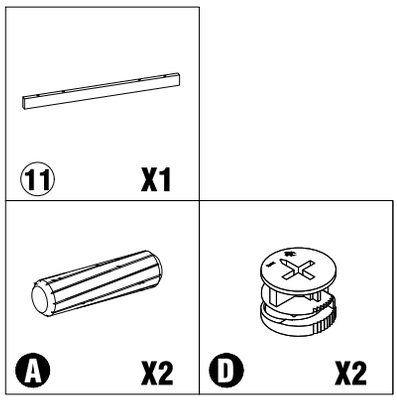

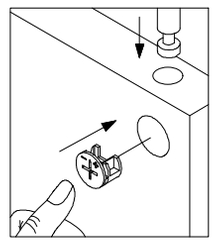

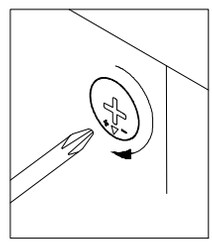

Ensure correct orientation of Part #11 before installation.

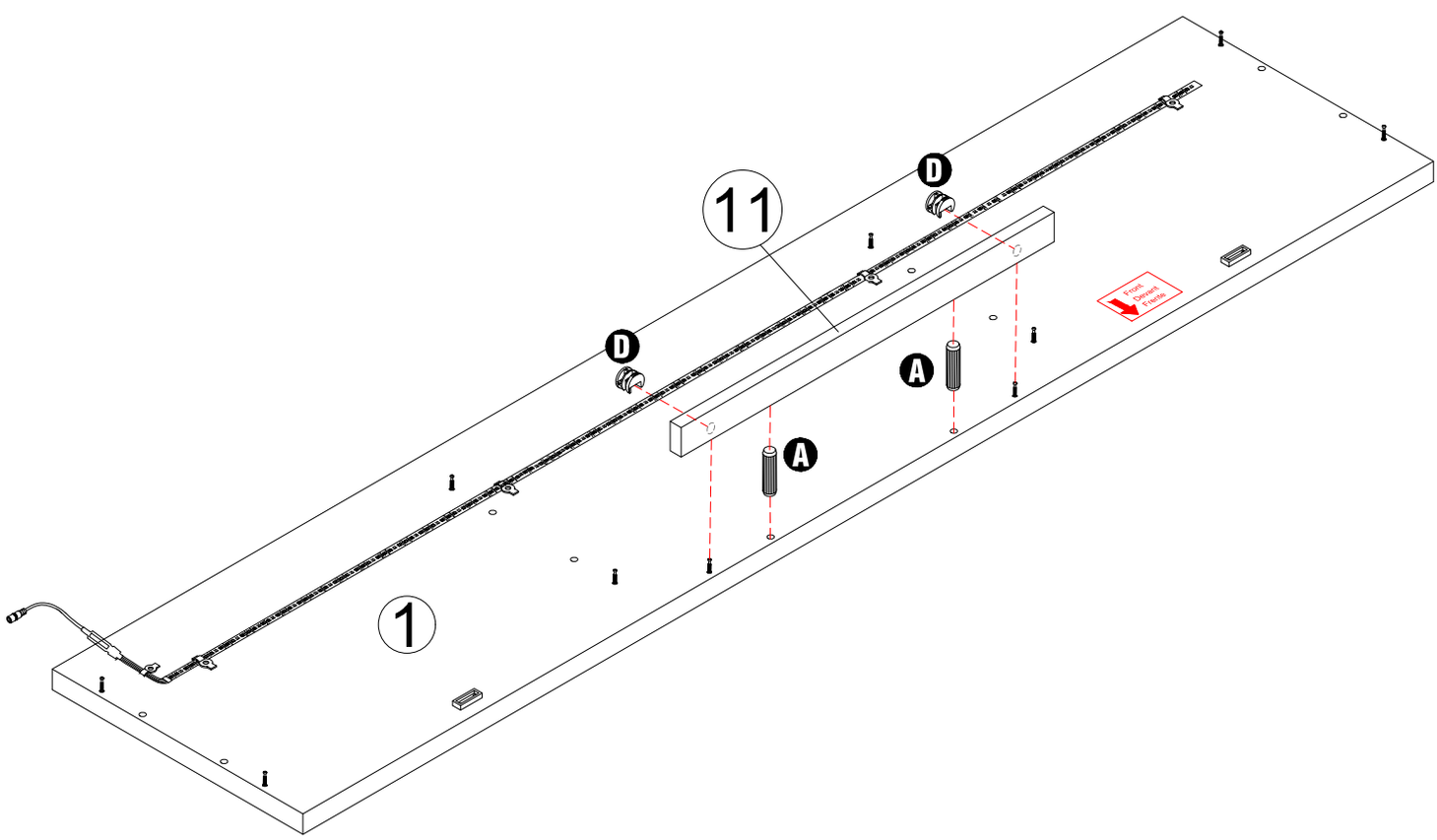

STEP 9 Assemble the top panel (#1) with the cabinet unit.

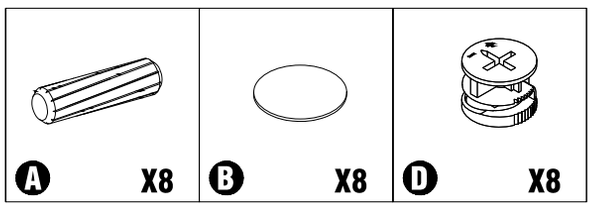

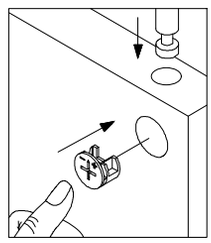

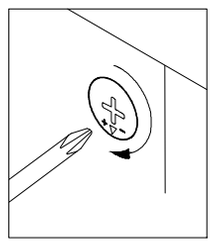

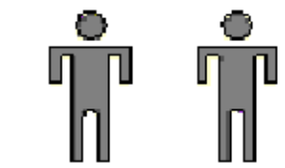

BACK SIDE

Pilot holes must face upward
and in the same direction.

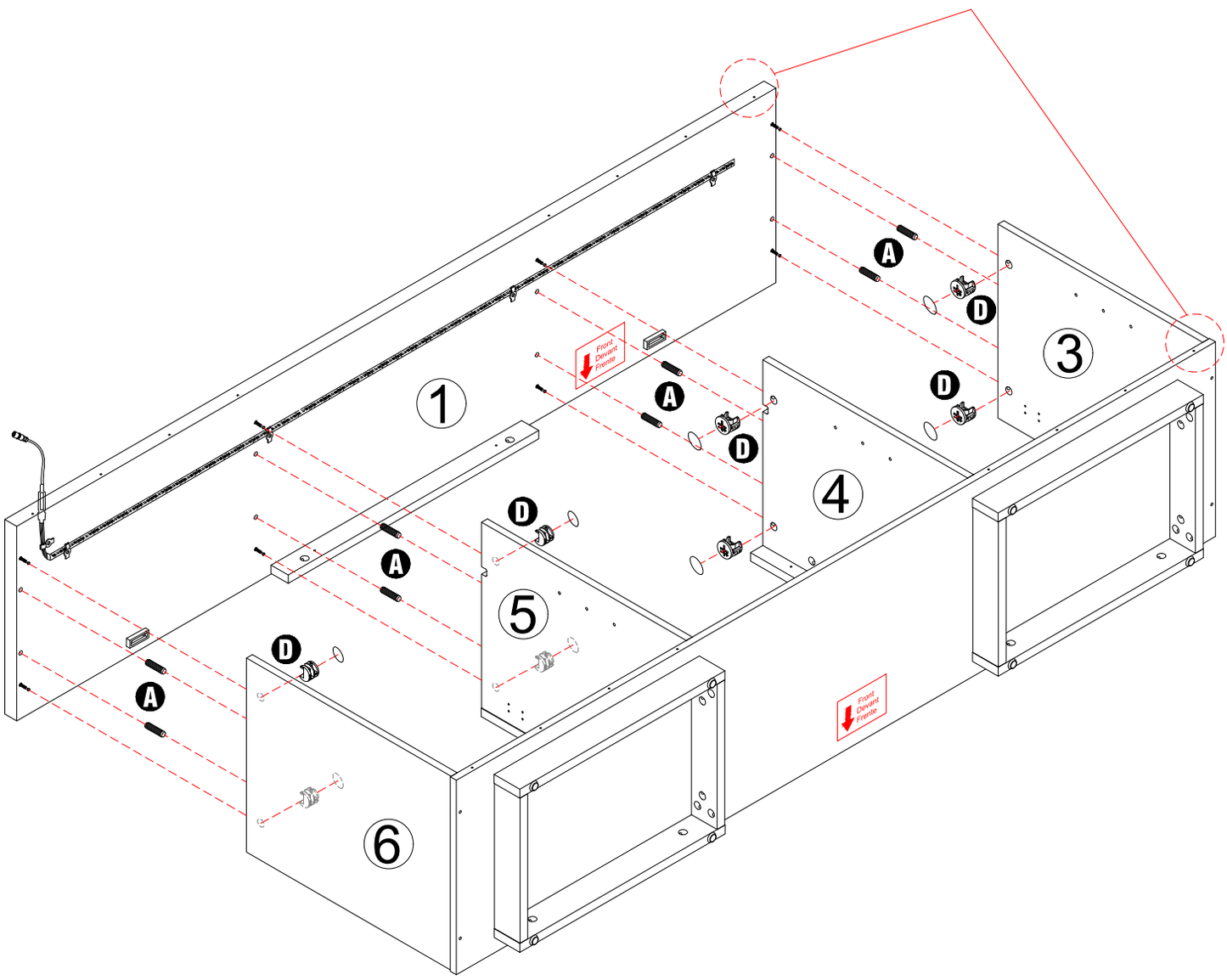

STEP 10 Assemble the back panel (#7)\(#8) with the cabinet unit.

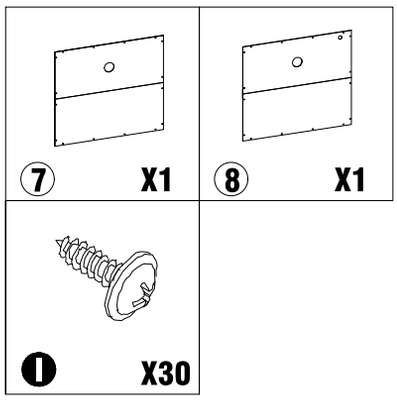



BACK SIDE

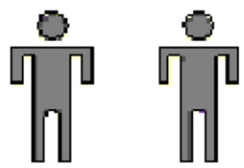

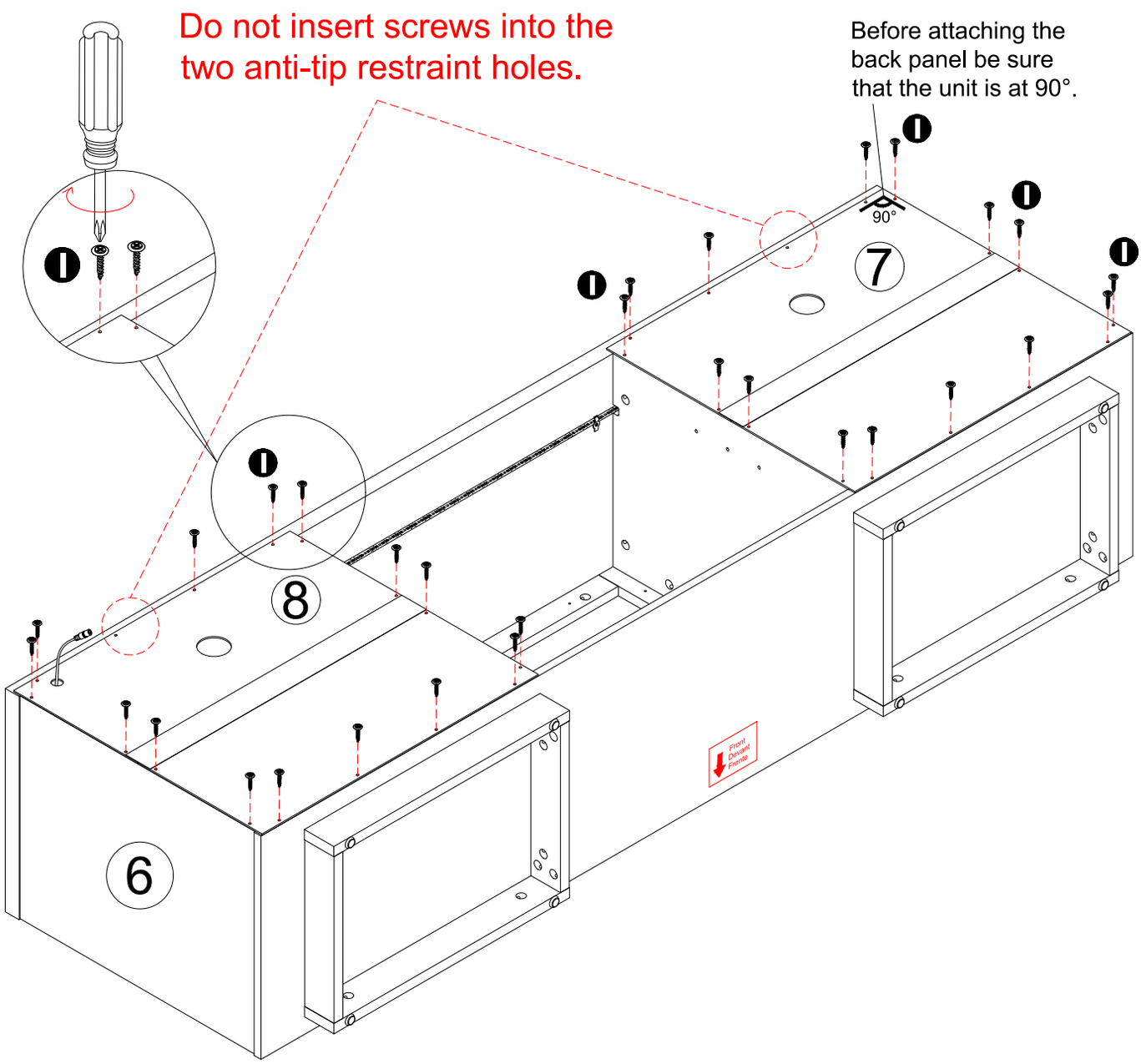

STEP 11 Insert the metal shelf support (#H) into the holes on the cabinet.

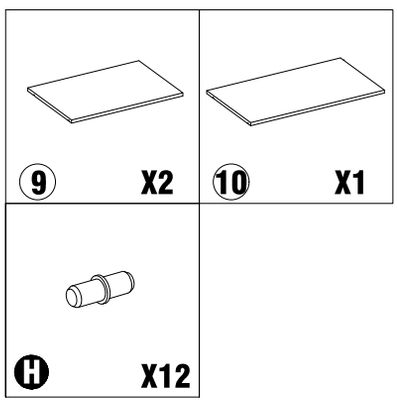

STEP 12 Install cabinet hinge (#R) and cabinet handle (#F).

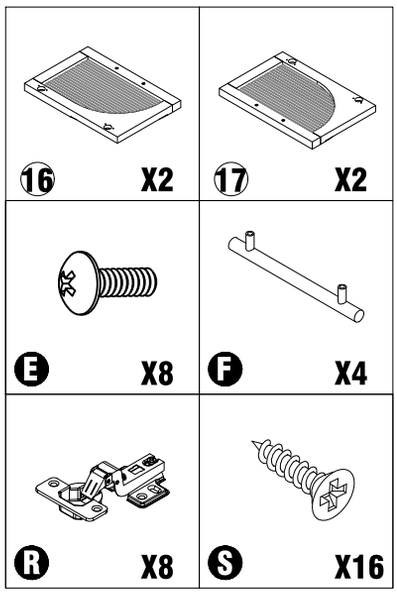



STEP 13 Install the door onto the cabinet.

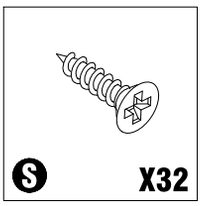

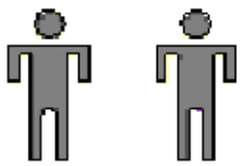



HOW TO ADJUST THE CONCEALED DOOR HINGES

Shipping can cause minor door misalignment. Use the screws shown to make small adjustments:

1. Move the door forward or backward.
2. Move the door left or right.
3. Move the door up or down.

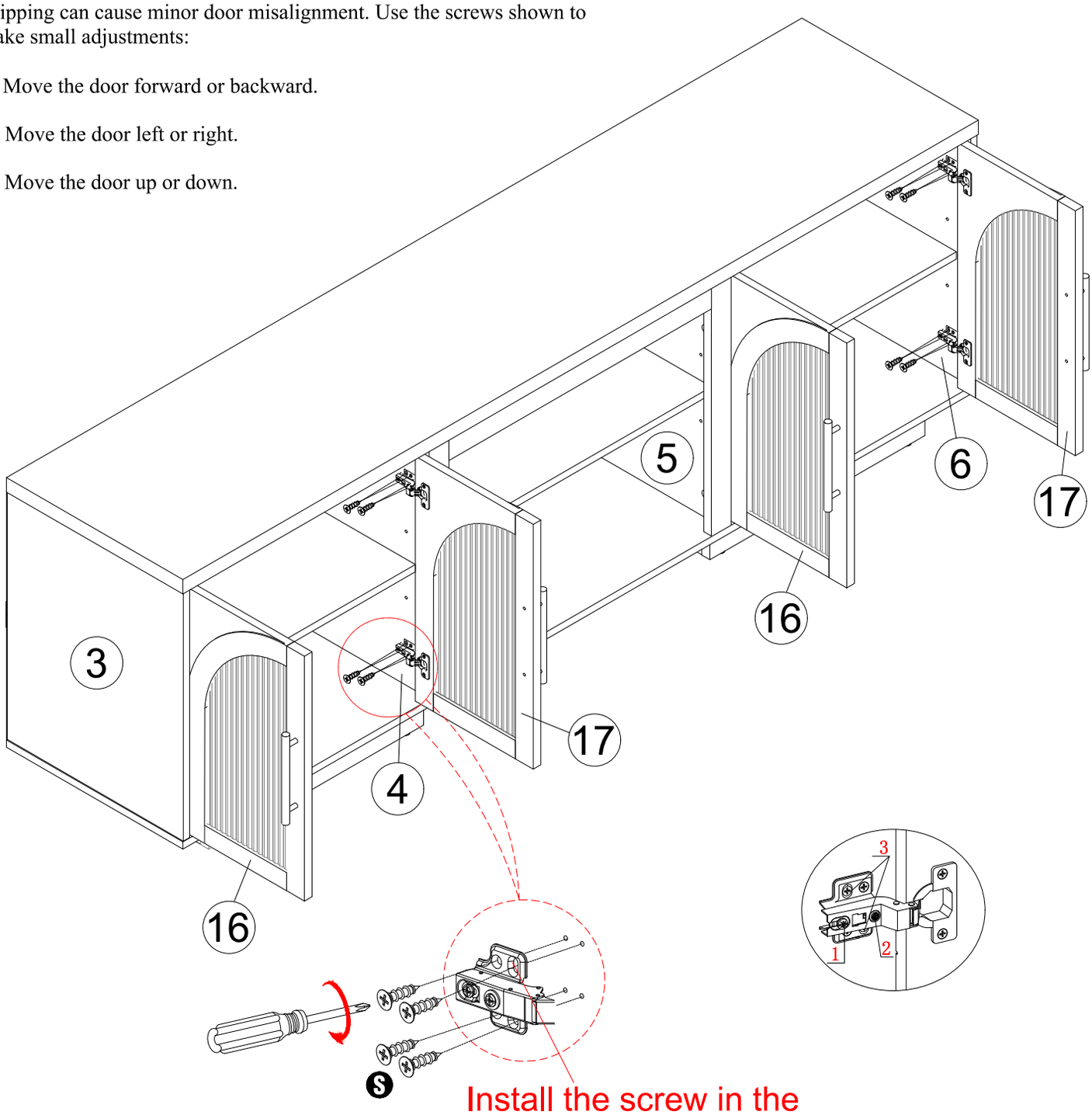

Install the screw in the elongated slot first to set the door height.

STEP 14 Install the accompanying accessories for the LED light strip.

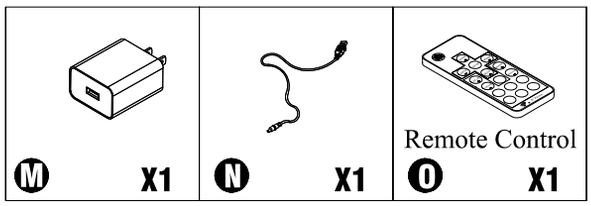

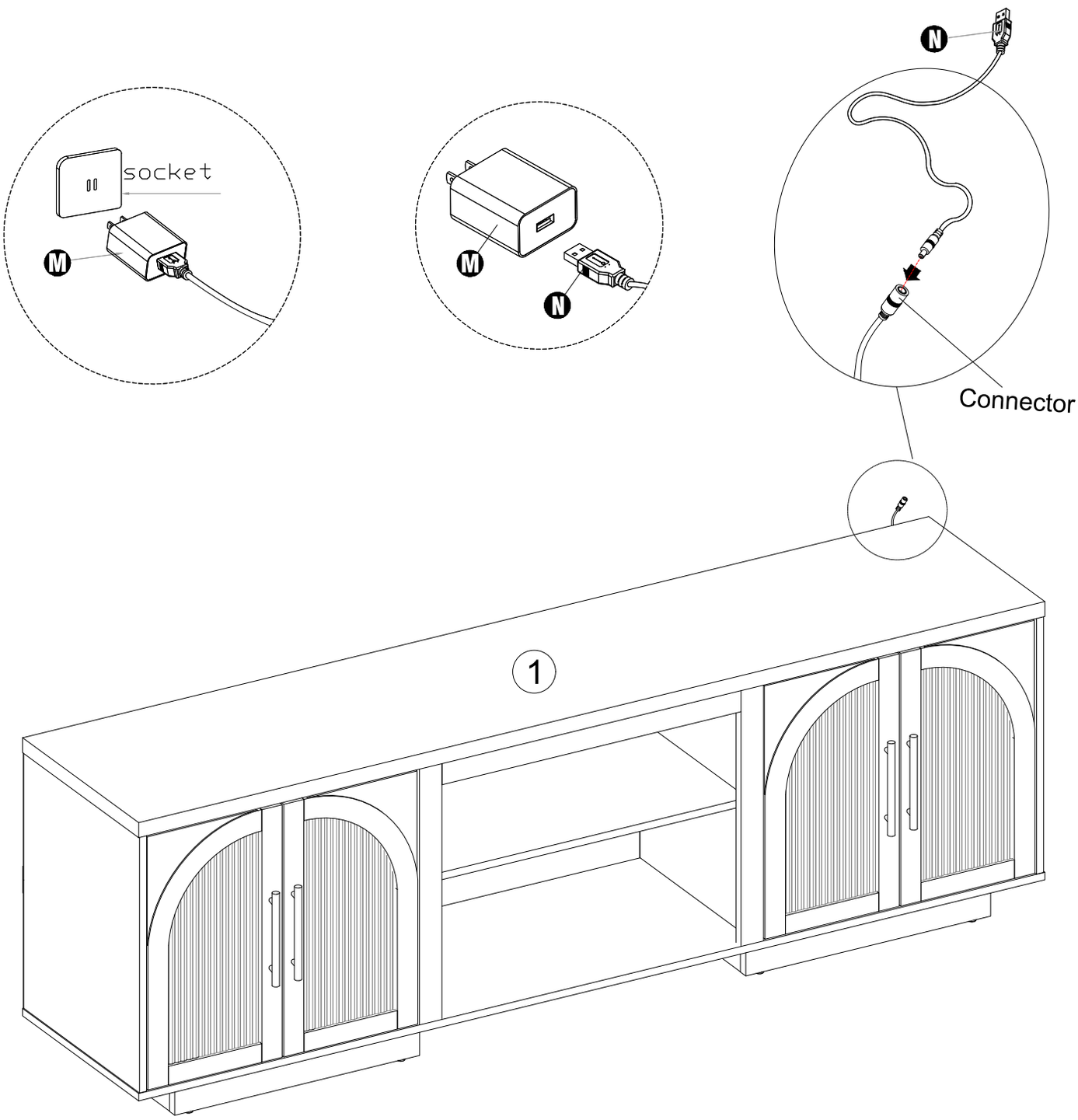

STEP 15 Install the anti-tip hardware for the cabinet.

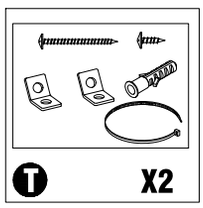

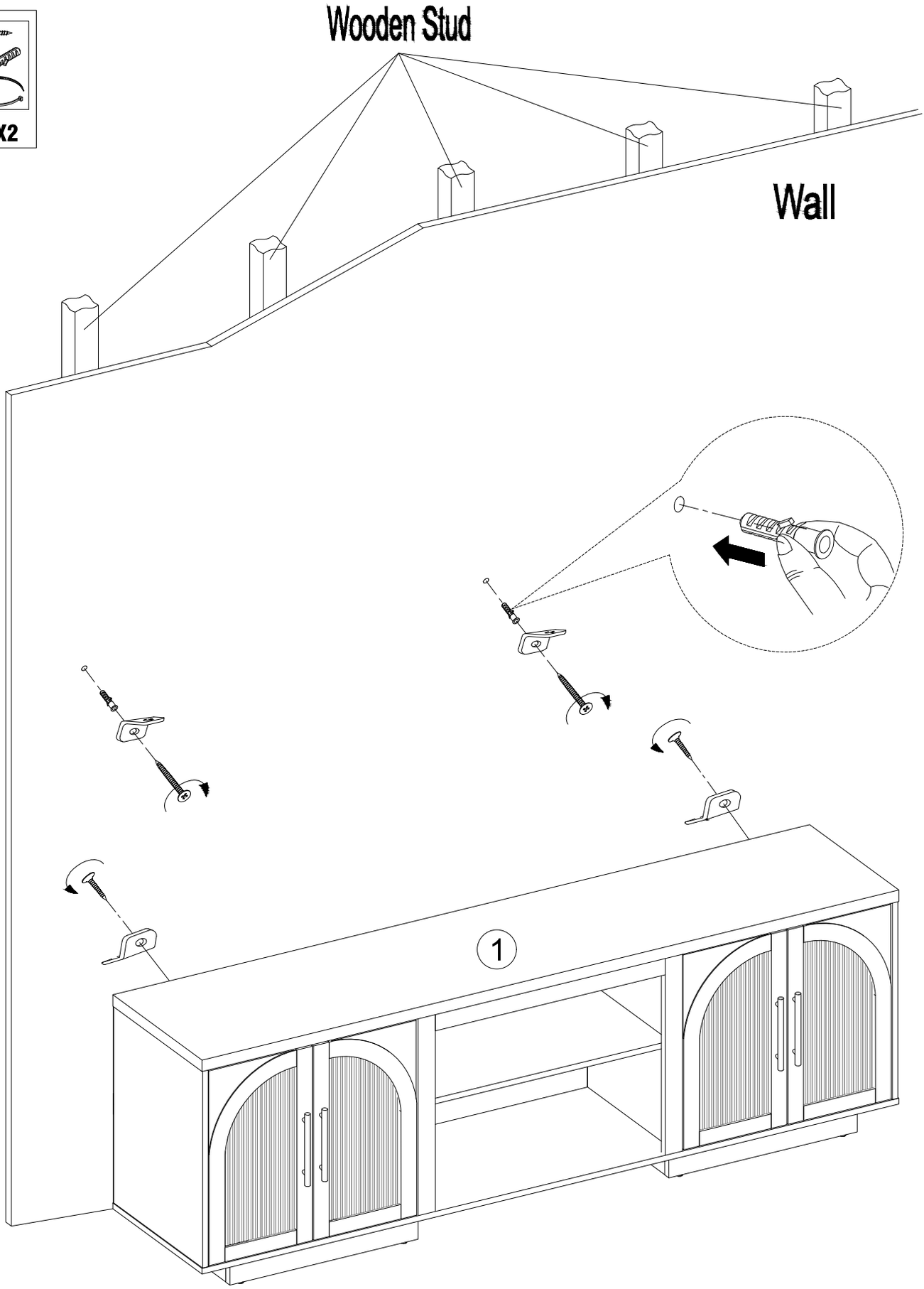

STEP 16 Adjust the cabinet's levelness using the leveling feet.

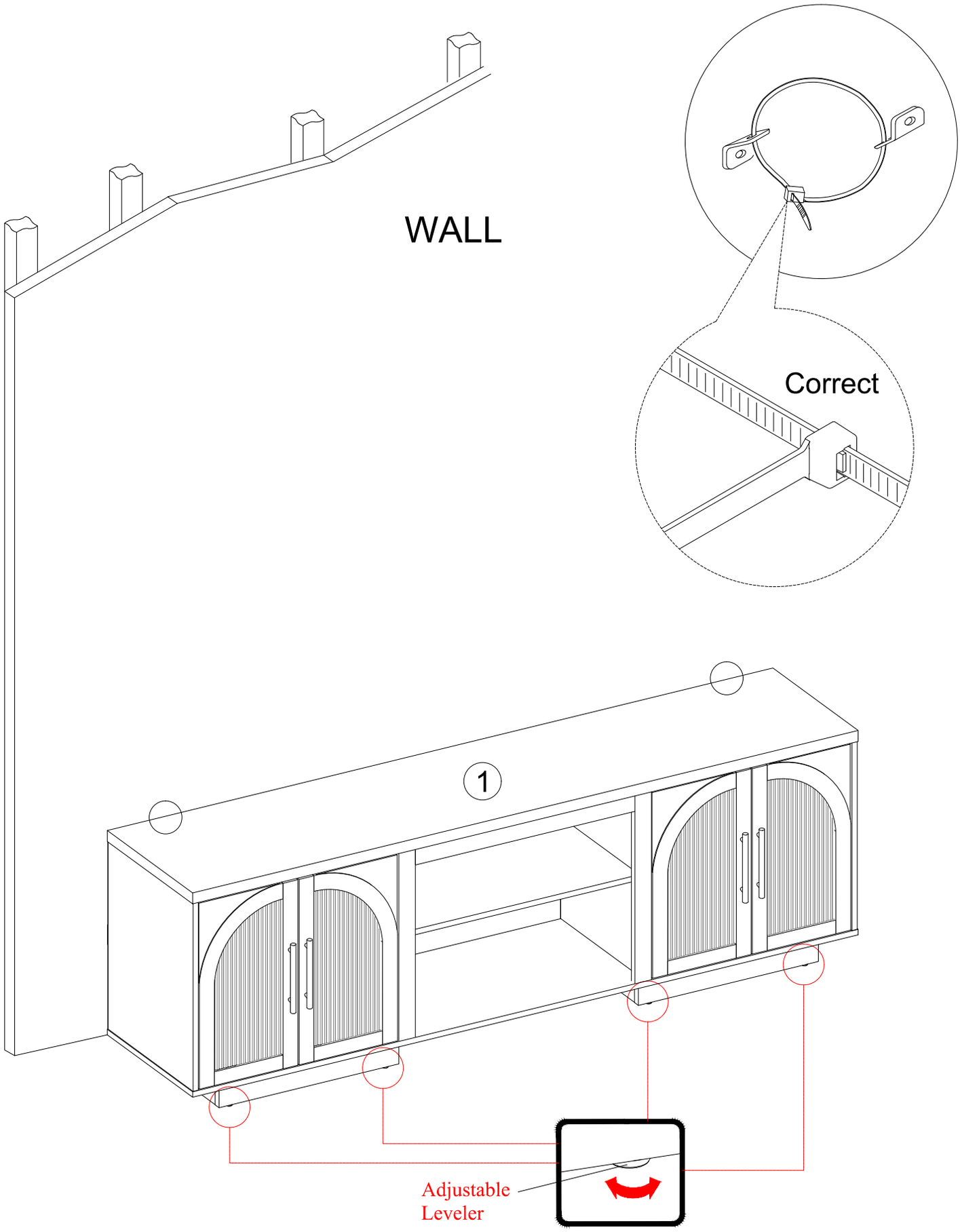

STEP 17 Cabinet Dimensions

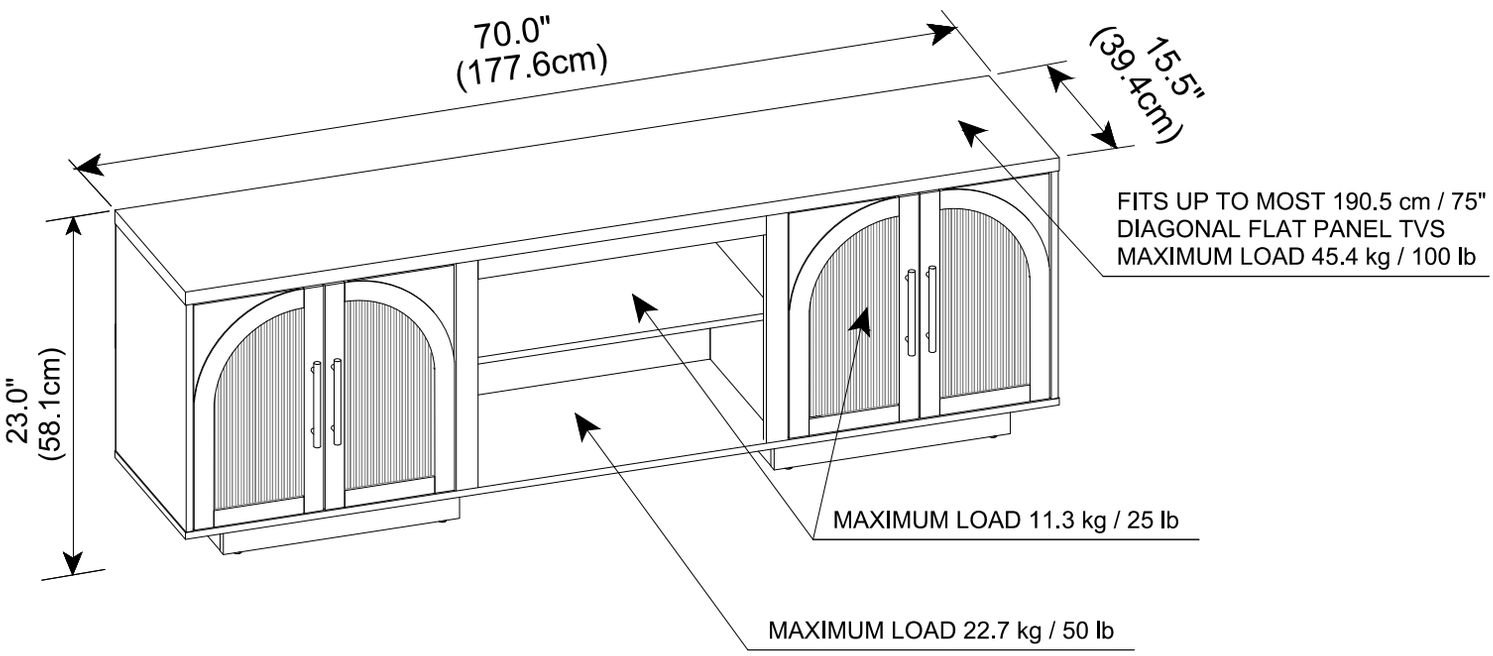

Note: The installation of the TV cabinet is now complete; if you also need to install a built-in fireplace, please continue reading below.

SPECIFICATIONS

ASSEMBLED DIMENSIONS(W x D x H)	70.0 x 15.5 x 23.0 in
	177.6 x 39.4 x 58.1 cm
MAXIMUM TOP LOAD	100 lb (45.4 kg)

STEP 18

OPTION 2: ELECTRIC FIREPLACE INSERT

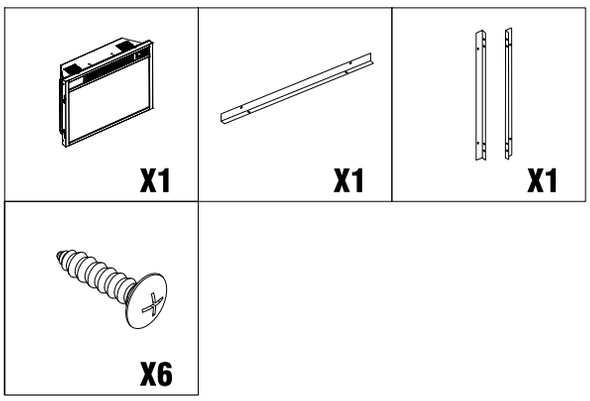



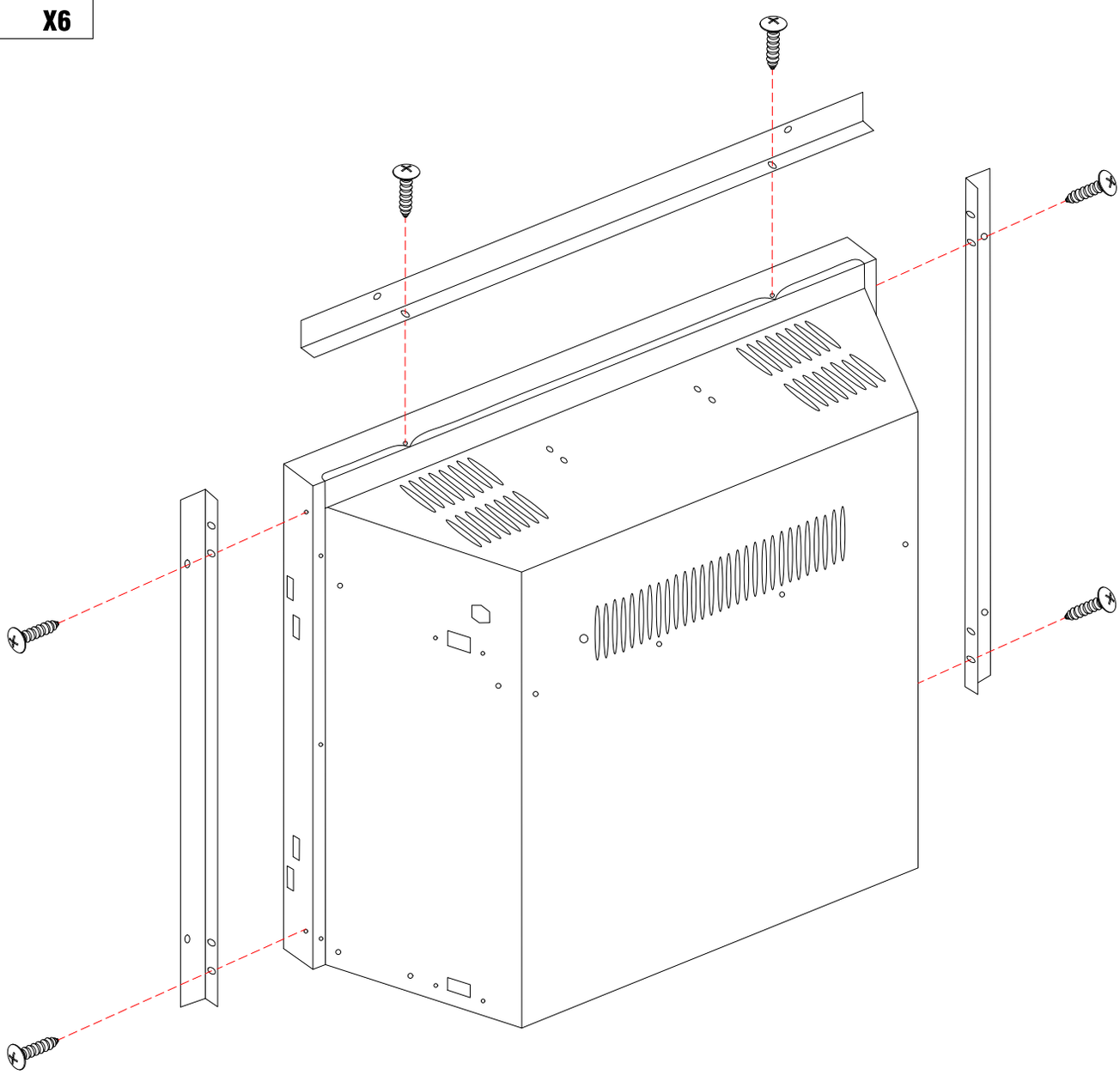

STEP 19

OPTION 2: ELECTRIC FIREPLACE INSERT

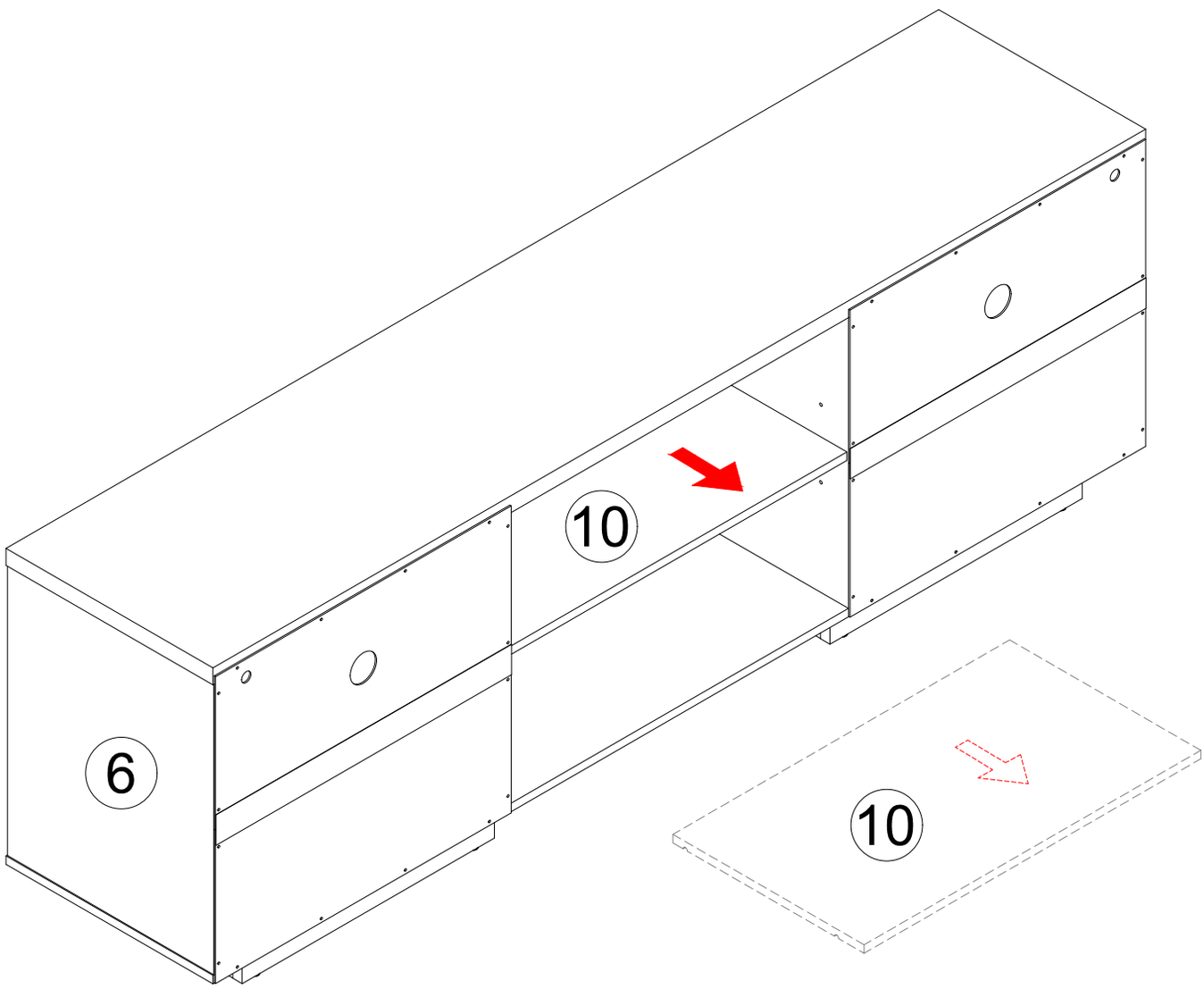

Remove the middle adjustable shelf (10).

STEP 20

OPTION 2: ELECTRIC FIREPLACE INSERT

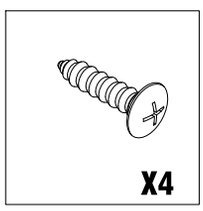

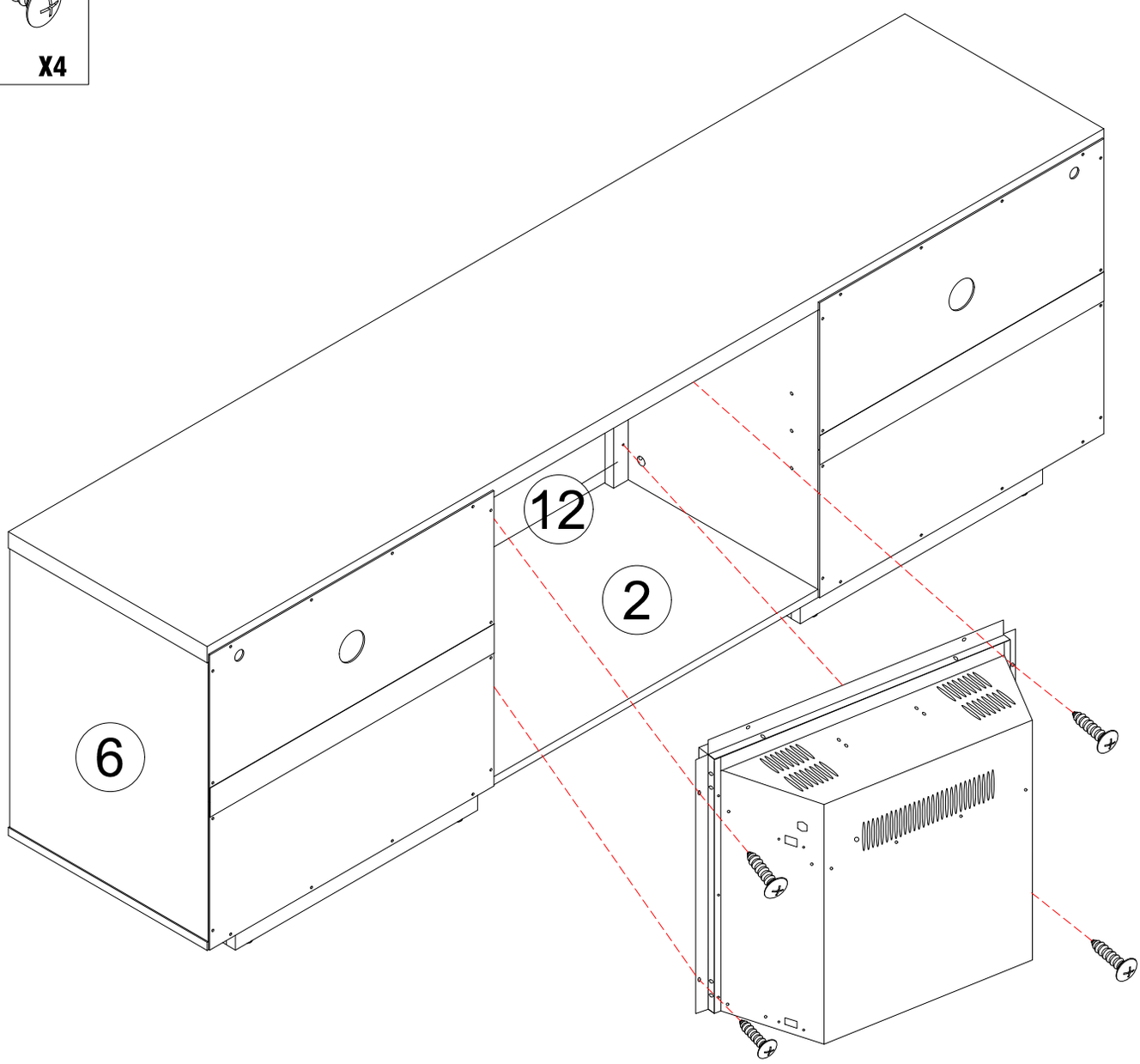

Tilt the heater insert and rest it on Bottom Panel (2). Gently push it into position, then secure it with the four wood screws shown.