TEAR SHEET



Belmore 10" Sconce

Item # RL 2290NB-ALB

Designer: Ralph Lauren

Height: 10"

Width: 9.25"

Extension: 3.25"

Backplate: 7.25" Round

Finishes: BZ, NB, PN

Shade Treatments: ALB

Lightsource: Dedicated LED

Wattage: 9w (1200lm)

Weight: 8 Pounds

Note: 120V Configuration Only | Alabaster is a Natural Stone | Variations in Color and Texture are Expected

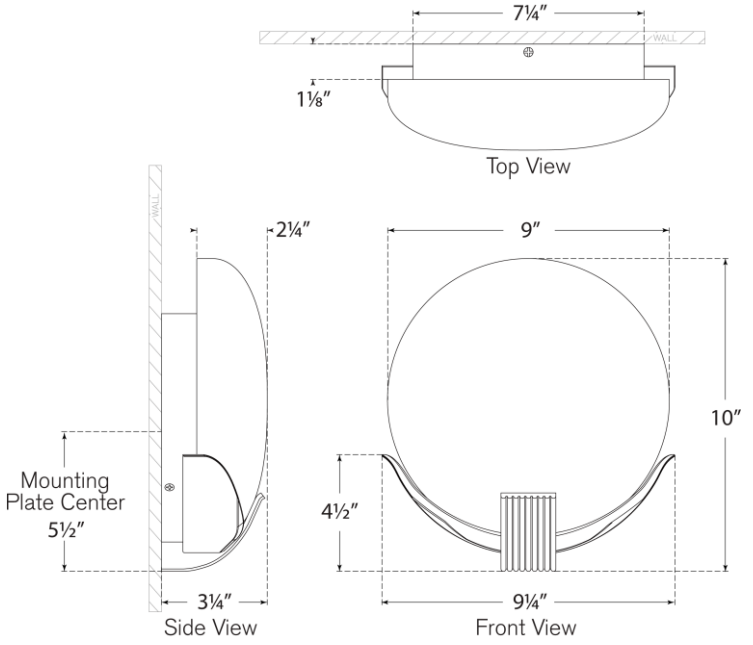

VISUAL COMFORT & CO.

DAMP LED 4