ASSEMBLY INSTRUCTION

A

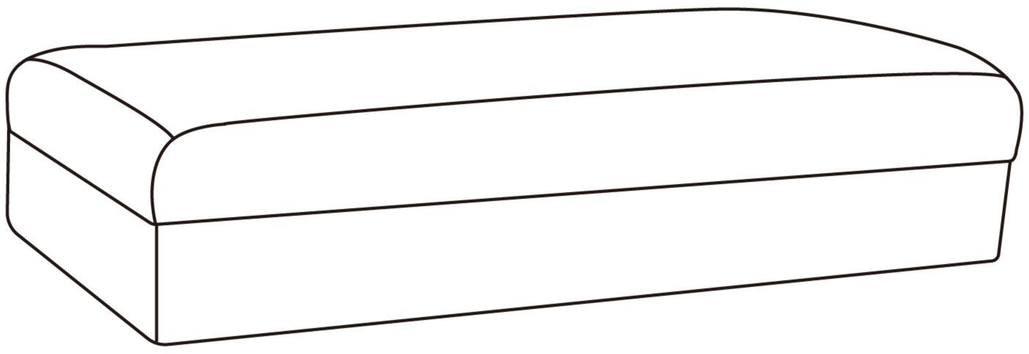

B

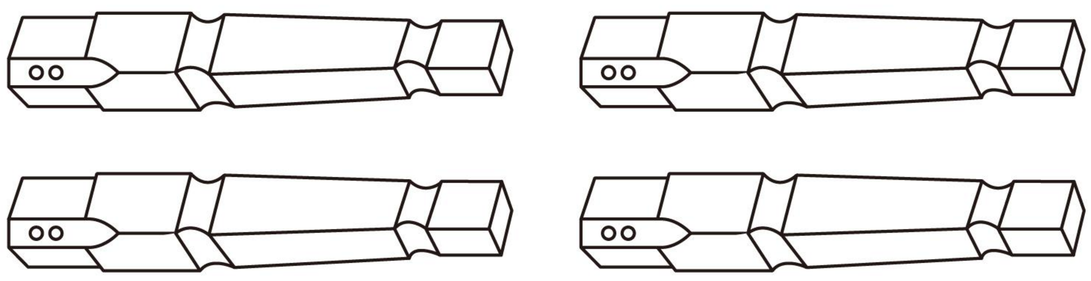

HARDWARE LIST

CODE	PARTS	QTY.
A		1
B		4
C	FLAT WASHER	8
D	SPRING WASHER	8
E	M4X13MM	8
F	ALLEN KEY	1

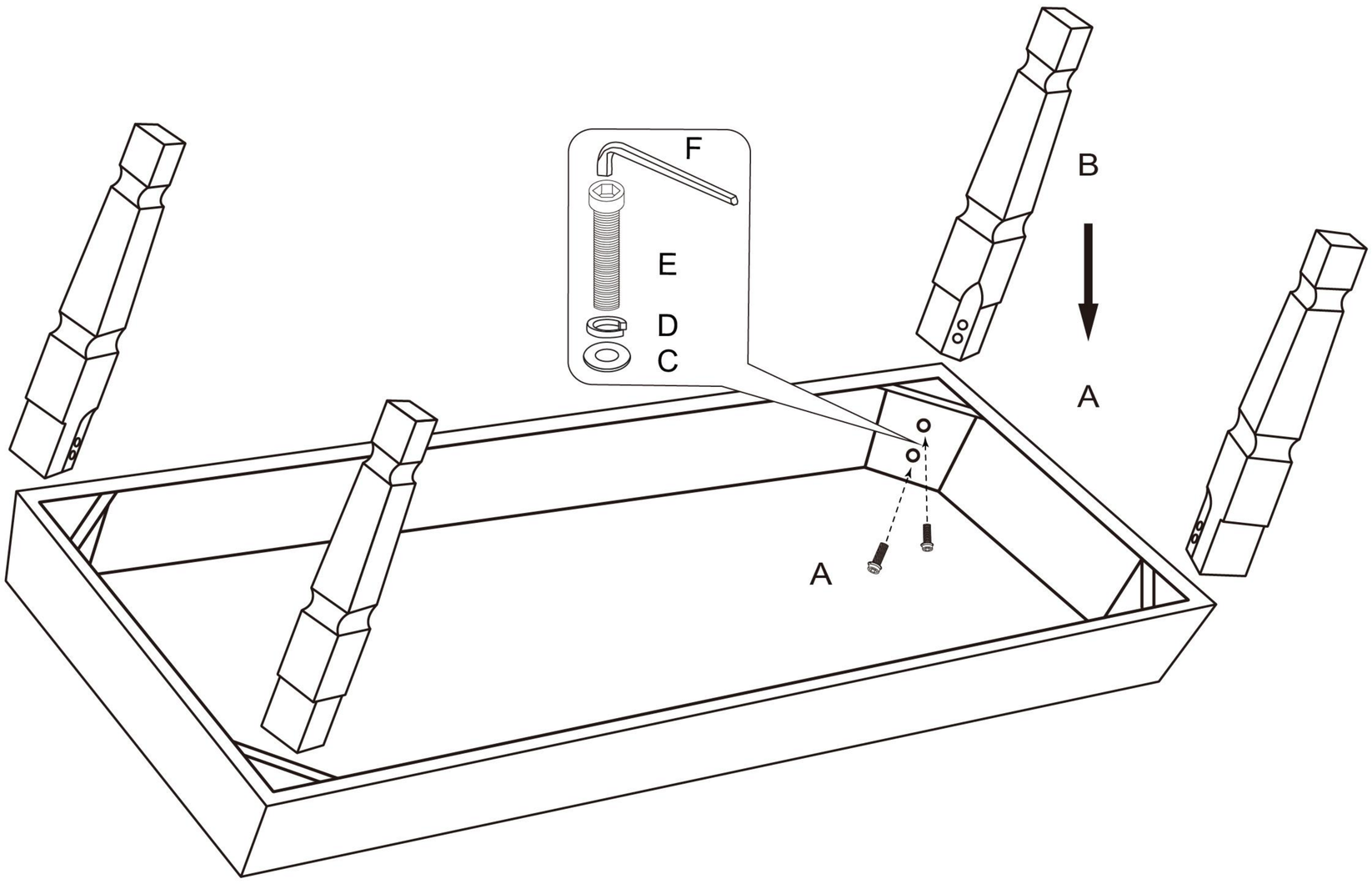

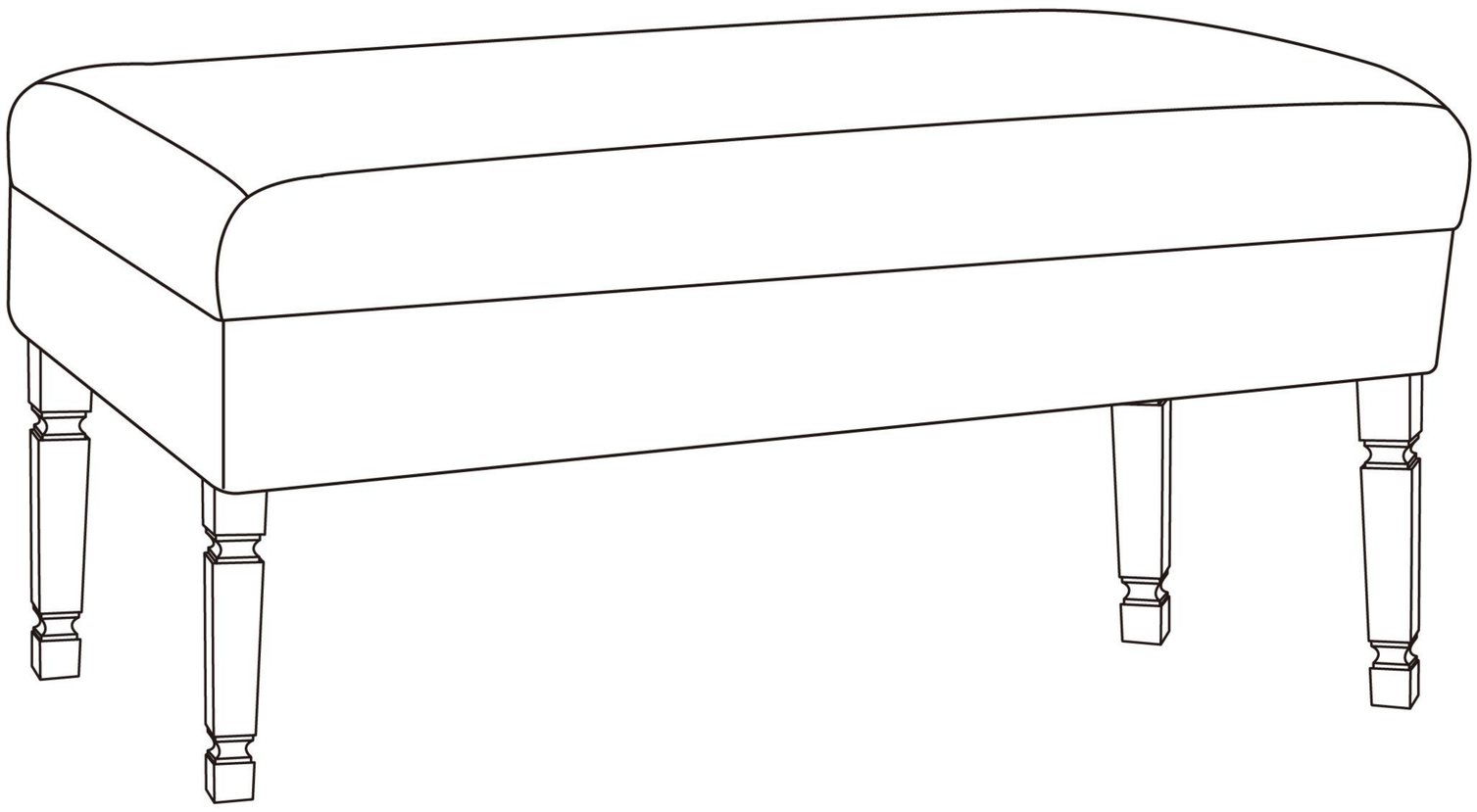

Get social with us and discover more about our products, tips and exclusive discounts!