INSTRUCTION MANUAL

FIREPIT

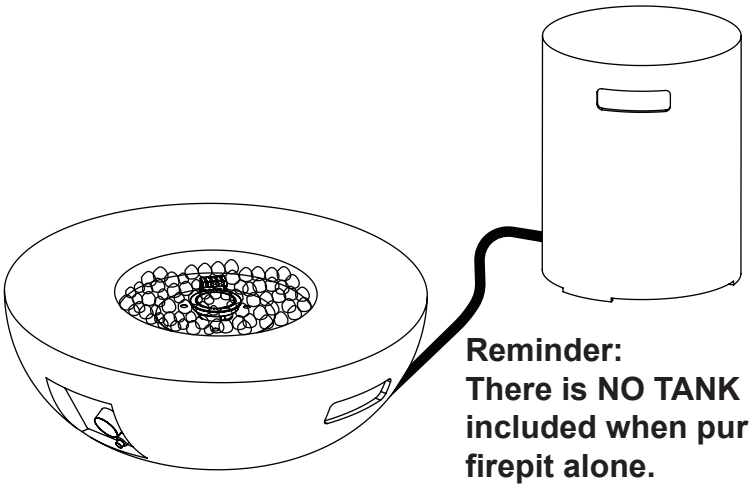

ANS Z21.97 • CSA 2.41-2017
Outdoor Decorative Gas Appliances

Reminder:
There is NO TANK HOLDER included when purchasing firepit alone.

INSTALLER: Leave this manual with the appliance.
CONSUMER: Retain this manual for future reference

⚠ DANGER
FIRE OR EXPLOSION HAZARD
If you smell gas:
- **Shut off gas to the appliance.**
- **Extinguish any open flame.**
- **If odor continues, leave the area immediately.**
- **After leaving the area, call your gas supplier or fire department.**

Failure to follow these instructions could result in fire or explosion, which could cause property damage, personal injury, or death.

⚠ WARNING: For Outdoor Use Only.
Installation and service must be performed by a qualified installer, service agency, or the gas supplier.

⚠ WARNING
Do not store or use gasoline, or other flammable vapors and liquids,in the vicinity of this or any other appliance.

An LP-cylinder not connected for use shall not be stored in the vicinity of this or any other appliance.

⚠ DANGER

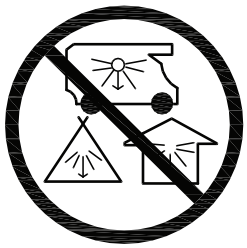

CARBON MONOXIDE HAZARD

This appliance can produce carbon monoxide which has no odor.

Using it in an enclosed space can kill you.

Never use this appliance in an enclosed space such as a camper, tent, car or home.

⚠ WARNING:
If the information in this manual is not followed exactly, a fire or explosion may result causing property damage, personal injury, or loss of life.

IMPORTANT SAFETY INFORMATION

1. The installation must conform with local codes or, in the absence of local codes, with the National Fuel Gas Code, ANSI Z223.1•NFPA 54; National Fuel Gas Code; Natural Gas and Propane Installation Code, CSA B149.1; or Propane Storage and Handling Code, CSA B149.2, as applicable.
2. The appliance must be isolated from the gas supply piping system by closing its individual manual shutoff valve during any pressure testing of the gas supply piping system at test pressures equal to or less than 1/2 psi (3.5 kPa).
3. The maximum inlet gas supply pressure is 250 psi.
4. The appliance area must be kept clear and free from combustible materials, gasoline, and other flammable vapors and liquids.
5. Do not use this appliance if any part has been under water. Immediately call a qualified service technician to inspect the appliance and to replace any part of the control system and any gas control that has been under water.
6. **Children and adults should be alerted to the hazards of high surface temperatures and should stay away to avoid burns or clothing ignition.**
7. **Young children should be carefully supervised when they are in the area of the appliance.**
8. **Clothing or other flammable materials should not be hung from the appliance or placed on or near the appliance.**
9. **Any guard or other protective device removed for servicing the appliance shall be replaced prior to operating the appliance.**
10. **Installation and repair should be done by a qualified service person. The appliance should be inspected before use and at least annually by a qualified service person. More frequent cleaning may be required as necessary. It is imperative that the control compartment, burners, and circulating air passageways of the appliance are kept clean.**
11. **CAUTION:** The propane gas pressure regulator provided with this appliance must be used. This regulator is set for an outlet pressure of 11 inches water column.
12. DO NOT burn solid fuels in this appliance.
13. This outdoor gas appliance is for Outdoor Use ONLY.
14. This outdoor gas appliance is not intended to be installed in or on recreational vehicles and/or boats.
15. This outdoor appliance is not for use on wood decks or other flammable surface.
16. Before each use of this gas appliance, open the door and/or the LP (Liquid Propane) Tank Drawer and inspect the hose. If there is evidence of excessive abrasion or wear or if the hose is damaged, the hose assembly must be replaced prior to the appliance being put into operation. Use only the replacement hose assembly specified in this manual. Make sure to leak test.
17. Before each use of this gas appliance, inspect the burner. The burner must be replaced prior to the appliance being put into operation if it is evident that the burner is damaged. Use only the replacement burner specified in this manual.
18. Make sure to properly locate the gas hose including locating the hose out of pathways where people may trip over it or in areas where the hose may be subject to accidental damage.
19. Keep the fuel supply hose away from any heated surface.
20. Never use this appliance closer than 10 feet from anything flammable, including houses or overhead tree branches.
21. Never use gasoline, kerosene, or any other liquid fuel to start a fire.
22. Always maintain a safe distance from the fire.
23. Always supervise children around the fire.
24. Never leave a fire unattended.
25. The appliance is hot during and after use, always allow ample cooling time before touching or moving.

IMPORTANT SAFETY INFORMATION ABOUT PROPANE (LP) GAS

1. The LP-gas supply cylinder to be used must be constructed and marked in accordance with the U.S. Deparment of Transportation (D.O.T.) Specifications for LP-Gas Cylinders, or the Standard for Cylinders, Spheres and Tubes for Transportation of Dangerous Goods and Commission, CAN/CSA-B339, as applicable.
2. The LP-gas supply cylinder to be used must have a listed overfilling prevention device (See Figure 1).
3. The LP-gas supply cylinder to be used must have a cylinder connection device compatible with the connection for the appliance.
4. A self-contained LP-gas cylinder for use with this appliance must have a capacity of 20 lbs cylinder (Height approximately 18 in., Tank Body approximately 12 in. diameter, Base approximately 8 in. diameter).
5. The cylinder supply system must be arranged for vapor withdrawl.
6. The cylinder used must include a collar to protect the cylinder valve.
7. This appliance shall be used only outdoors in a well-ventilated space and shall not be used in a building, garage or any other enclosed space.
8. When this appliance is not in use, the gas must be turned off at the supply cylinder.
9. Storage of this appliance indoors is permissible only if the cylinder is disconnected and removed from the appliance.
10. Cylinders must be stored outdoors in a well-ventilated area out of the reach of children. Disconnected cylinders must have threaded valve plugs tightly installed and must not be stored in a building, garage or anyother enclosed areas.
11. This appliance is certified by CSA (Canadian Standards Association) to ANS Z21.97•CSA 2.41-2017, Outdoor Decorative Gas Appliances.

⚠ WARNING

This product can expose you to chemicals including Carbon monoxide, which is known to the State of California to cause birth defects or other reproductive harm.For more information go to www.P65Warnings.ca.gov.

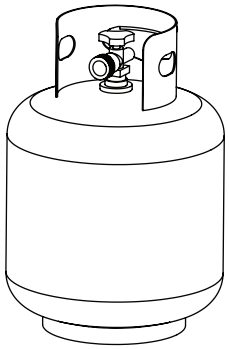

Standard 20 lb.tank

Figure 1

SPECIFICATIONS

Rated Heat Input (Liquid Propane)	30,000 BTU/hr
Propane Regulator Pressure	11 inches water column
Clearance to combustible surfaces	Sides: 24in. (610mm), Top: 72in. (1829mm)

PACKAGE CONTENTS

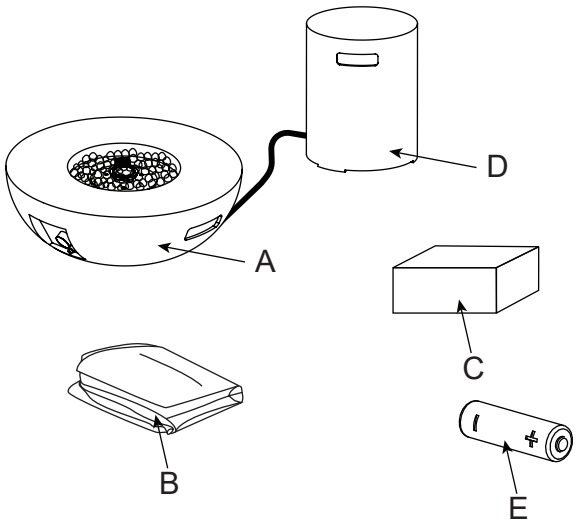

PART	DESCRIPTION	QUANTITY
A	Fire table	1
B	Weather cover	1
C	Lava rock (4.18 lbs)	1
D	Tank holder(Not provided)	1
E	Battery (AAA)	1

ASSEMBLY INSTRUCTIONS

1. Carefully unpack all parts from the box, compare parts with package content listed above, make sure all parts are present before beginning assembly of product. If any part is missing or damaged, do not attempt to assemble the product. Contact customer service for replacement parts.
2. Open the box of lava rocks, put the lava rocks (C) into the fire bowl of the fire table (A) (See Figure 2). A gas fire pit requires 4.18 lbs lava rocks.

   WARNING: keep children away during assembly, as this item contains lava rocks, which are small pieces and can be swallowed by children.

   NOTE: leave the pilot box uncovered by the lava rocks.

CAUTION: Please be advised that this fire pit is equipped with natural lava rock that may crackle or pop the first time it is used. The lava rock has been pre-heat treated to release any natural inherent moisture. However, in rare cases on first time use, the lava rock may pop or burst causing small pieces of hot rock to potentially be a projectile. These hot pieces could cause injury or property damage. As a precaution, please follow these instructions the first time the fire pit is used:

(1). On first use, do not stand over or near the fire pit once lit.
(2). Light the fire pit and let it run on high for 20 minutes.
(3). Once lit, do not go within 12 feet of the fire pit for at least the first 20 minutes on the first use to ensure any residual moisture trapped in the rocks gets released.
(4). After the first heating cycle there is little further concern. It is rare that any crackling will happen on the first use, this is simply a precaution.
(5). Keep lava rock covered and dry while not in use to prevent additional moisture from getting in the rocks.
(6). If lava rocks are exposed to moisture after first use, run the burner on low to gradually warm and dry the rocks before repeating steps 1 through 3.

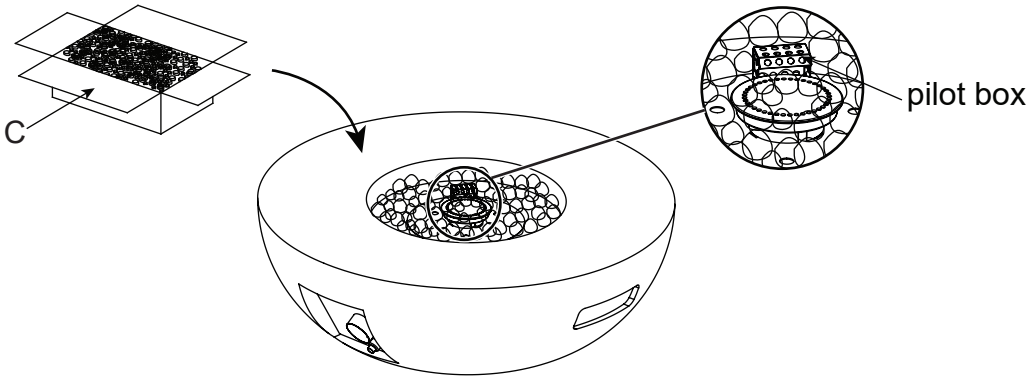

Figure 2

3. Connect the regulator, screw the black handle clockwise to tighten, turn the black handle counterclockwise to remove. The hose must not turn upside. The knob on the control panel is turned all the way to the “OFF” position when the fireplace is NOT in use (See Figure 3).

   NOTE: fire pit and gas tank must have the minimum distance of 40 inches.

   WARNING: make sure to properly locate the gas hose by keeping it out of pathways where people may tip over it or in an area where the hose may be subject to accidental damage.

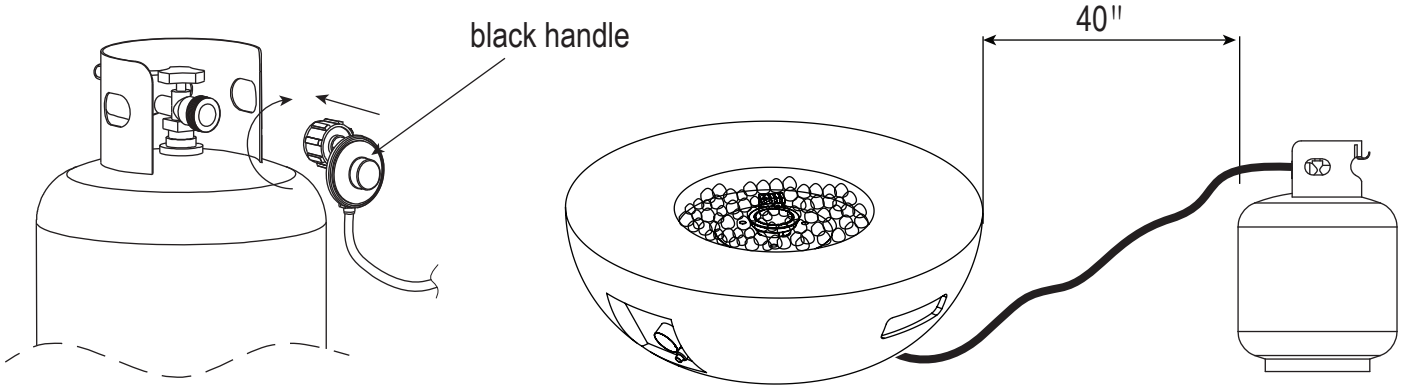

Figure 3

4. Cover the fire pit with the outdoor Weather cover (B) when not in use to protect it from the elements or when fire pit is cool COMPLETELY after the use (See Figure 5).

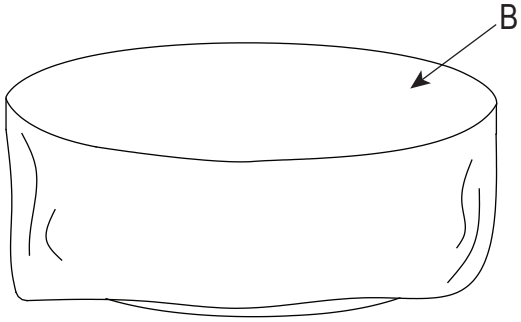

Figure 4

BATTERY

Make sure the control knob is in the “OFF” position. Unscrew the push button cap on the ignitor module located on the control panel to access the battery compartment. The ignitor module requires one AAA size battery (See Figure 5).

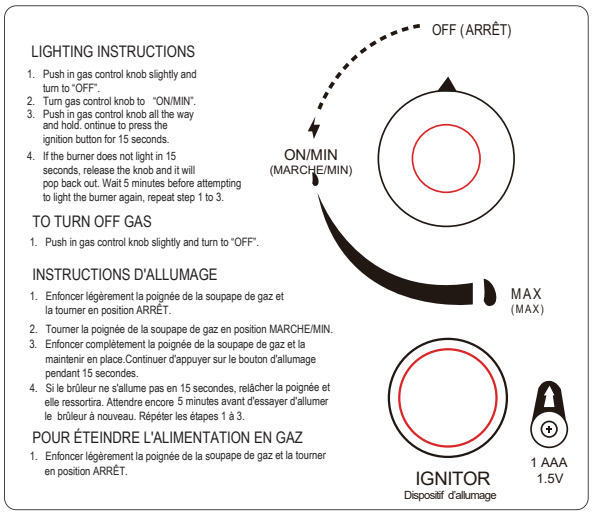

Figure 5

Remove the rubber cap on the igniter by unscrewing and sliding battery (E) into the battery compartment (See Figure 6). Make sure the positive (+) side of the battery faces outward. Screw the rubber cap over the battery compartment tightly.

WARNING:

1. Please observe proper polarity and use the correct battery type when installing or replacing the battery. Improper installation could result in ignition failure.
2. Please remove the battery if consumed or if product is to be left unused for a long period of time.

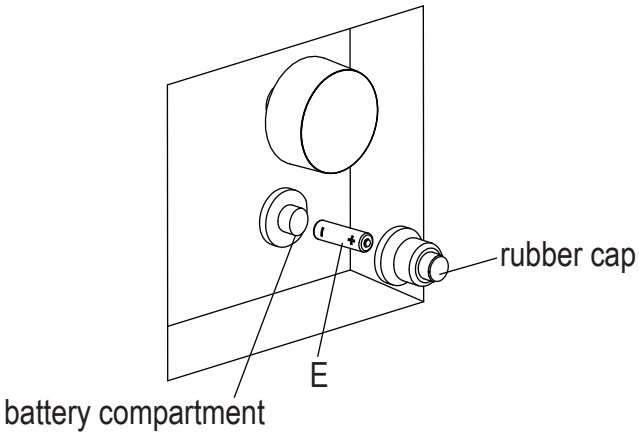

Figure 6

Leak Test

To prevent fire or explosion hazard when testing for a leak:

1. Always perform the leak test as described below before lighting this appliance or each time the cylinder is connected for use.
2. Do not smoke or allow other sources of ignition in the area while conducting a leak test.
3. Conduct the leak test outdoors in a well-ventilated area.
4. Do not use matches, lighters or a flame to check for leaks.
5. Do not use this appliance until any and all leaks are corrected. If you are unable to stop a leak, disconnect the propane supply. Call a gas appliance service shop or your local propane gas supplier.

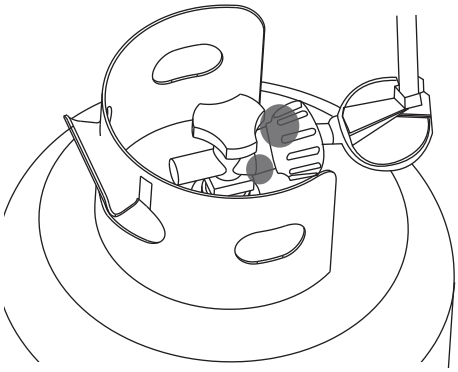

cylinder-regulator connection (Figure 7)

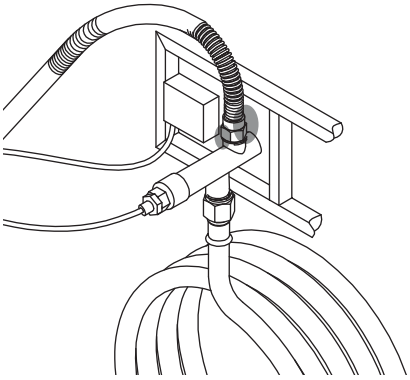

gas valve-bellows connection (Figure 8)

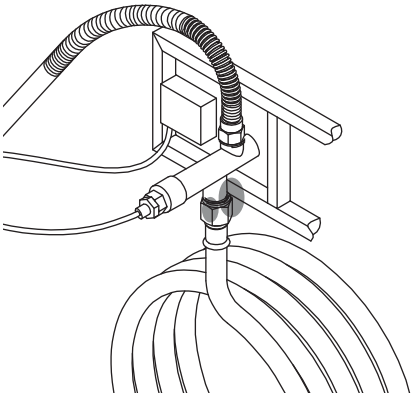

gas valve-hose connection (Figure 9)

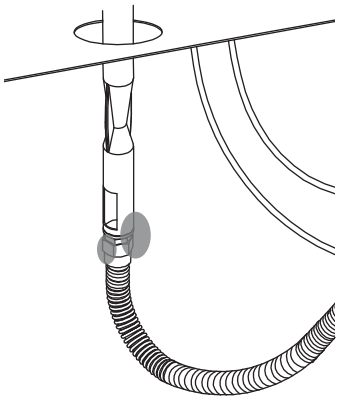

inlet tube-bellows connection (Figure 10)

To perform a leak test:

1. Make 2~3 oz. of leak solution by mixing one part liquid dishwashing detergent and three parts water. Noted: make sure control knob is “OFF”.
2. Apply several drops of solution where the cylinder attaches to regulator (See Figure 7), inspect the solution at the connection looking for bubbles. If NO bubbles appear, the connection is secure. If bubbles appear, the connection has the leak, disconnect the regulator, reconnect, perform another leak check. If you continue to see bubbles after several attempts, cylinder valve is defective and should be returned to cylinder’s supplier.
3. Apply several drops of solution where gas valve attaches to bellows (See Figure 8), where gas valve attaches to hose (See Figure 9), and where inlet tube attaches to bellows (See Figure 10). If NO bubbles appear, the connections are secure. If bubbles appear, the connection has the leak, disconnect, reconnect,perform another leak check. If you continue to see bubbles after several attempts, the part is defective and should replace the part.

LIGHTING INSTRUCTIONS

1. Push in gas control knob slightly and turn to “OFF”.
2. Turn gas control knob the “ON/MIN”.
3. Push in gas control knob all the way and hold. ontinue to press the ignition button for 15 seconds.
4. If the burner does not light in 15 seconds, release the knob and it will pop back out. Wait 5 minutes before attempting to light the burner again, repeat step 1 to 3.

TO TURN OFF GAS

1. Push in gas control knob slightly and turn to “OFF”.

WARNING: For your safety, read and follow the Lighting Instructions in this manual and in the Rating Plate on the appliance. IMPROPER LIGHTING PROCEDURES COULD RESULT IN A FIRE HAZARD OR EXPLOSION HAZARD OR PROPERTY DAMAGE, INJURY OR LOSS OF LIFE.

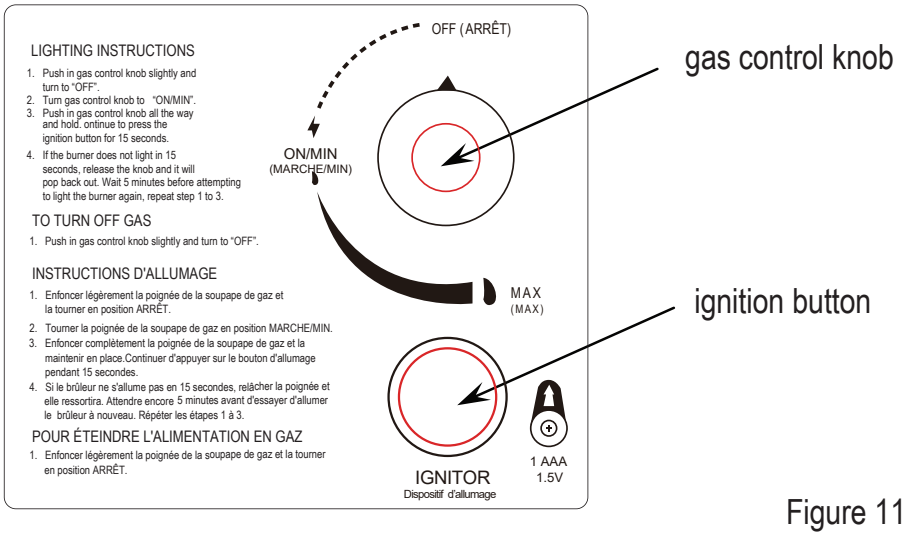

Figure 11

Observe Flame Height When Lit: The burner will display blue and yellow flames. These flames should be a yellow and blue color between 5cm (2 in.) to 25cm (10 in.) in height (See Figure 12).

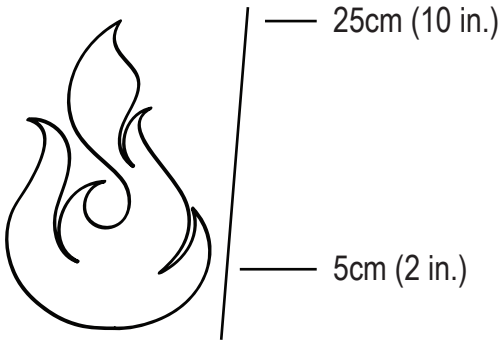

Figure 12

CARE AND MAINTENANCE

To enjoy the outstanding performance from your fire pit, make sure you perform the following activities on a regular basis:

1. Before each use of this product, inspect the hose for any visible cut wounds, cracks, abrasions, or signs of aging, or signs of rodent chewing. If the hose is defective, DO NOT use it. It must be replaced.
2. Use warm soapy water for cleaning. Never use flammable or corrosive cleaning agents.
3. Remove dirt, spills or stains on the product quickly.
4. Dry the product with a soft cloth or paper towel.
5. Do not use sharp tools to scratch the product.
6. While cleaning the fire pit, make sure to keep the area around the burner dry at all times. DO NOT submerge the control valve assembly. If the gas control is submerge in water, DO NOT use it. It must be replaced.
7. Air flow must be unobstructed. Keep controls, burner, and circulating air passageways clean. Signs of possible blockage include:
   (1). Gas odor with extreme yellow tipping of flame.
   (2). Fire pit does NOT reach the desired temperature.
   (3). Fire pit flame is excessively uneven.
   (4). Fire pit makes popping noises.
   (5). Spiders and insects can nest in burner or orifice. This dangerous condition can damage fire pit and render it unsafe for use. Clean burner holes by using a heavy-duty pipe clearer. Compressed air may help clear away small particles.
8. Carbon deposits may create a fire hazard. Clean burner with warm soapy water if any carbon deposits develop.
9. Cover your fire pit with an outdoor weather cover when not in use to protect it from the elements.
   NOTE: Always allow fire pit to cool COMPLETELY before you cover the fire pit with an outdoor weather cover or you attempt the service or maintenance.
10. NOTE: Always dry the product completely before it is covered or stored into the garage.

REPLACEMENT PARTS LIST

NO	PART#	DESCRIPTION
1	A	Fire table
2	B	Weather cover
3	C	Firepit lava rock (red), 4.18 lbs
4	D	Firepit thermocouple, 350 mm/14"
5	E	Firepit pulse ignition
6	G	Firepit regulator 90 degree hose 3048 mm/120"
7	I	Firepit electrode 1.75" tip, wire 300 mm for 30000 BTU

WARRANTY

Firepits
Burner, steel fire pit bowl, all mechanical parts and fittings to control panel and burner assembly, and all fire pit tops that are not cast aluminum are warranted for a period of one (1) year from original date of purchase, against defects in material and or workmanship. Rust is not covered.

Frames
Frames are warranted to be free from defects in materials and workmanship for a period of one (1) year. Damage to frames or welds due to improper assembly or exposure to water and sub-freezing temperatures, is not covered. Breakage that is a result of product being dropped, acts of God, acts of war, etc. are not covered.

Finish
The finish is warranted against peeling, cracking, or blistering for a period of one (1) year provided the product has not been scratched or abraded. Scratches and chips resulting from normal wear and tear are not covered. Fading resulting from exposure to elements is not covered. Stains as a result of chemical spills and certain food items are not covered.

Table Tops
All table tops are warranted for a period of one (1) year from original date of purchase, against defects in material and or workmanship. Breakage, discoloration, staining, and or any other weather related issues are not covered.

Warranty Exclusions
Failure caused by unreasonable or abusive use. Firepits that were clearance items, display models or items purchased in an "as is" condition, freight damage, firepit damaged by acts of nature, vandalism, fire, abuse, lack of proper care and maintenance, or improper assembly; straps and normal fading or discoloration from exposure to elements, oils, spills, fluids or chemicals; Table top against breakage; hardware against corrosion or rusting; buckling or splitting of tubing resulting from exposure to water and freezing temperatures; glass table tops, purchased or replacement parts; plastics. Also excluded: loss of use of time and or inconvenience, money, travel, packaging or any other consequential or incidental damages. In no event shall our side responsibility exceed the value of the replacement product. Warranty is to the original purchaser when items are purchased from one of our authorized retailers and is not transferable. All warranty claims must be submitted with a dated register receipt within the warranty period. Should replacement of the warranted item be unavailable, our side reserves the right to substitute items of our choice similar in style, color and quality. For quality control purposes and verification, we reserve the right to request photographs of the damage item(s). The terms of this warranty are subject to change without notice.