ASSEMBLY INSTRUCTION

Thank you for purchasing this quality product. Be sure to check all packing material carefully for small parts which may have come loose inside the carton during shipment. Separate, identify anh count all parts and metal hardware. Compare with parts list to be sure all parts are present. If any part(s) are missing or damaged, please contact your local furniture dealer. For efficient and speedy service, please indicate the model number and code letter of part(s) needed.

***** Do not fully tighten screws until fully assembled *****

No.	COMPONENT LIST		Q'ty
A		Console Table Frame	1pc
B	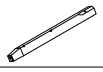	Legs	4pcs
C	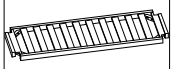	Upper Shelf	1pc
D	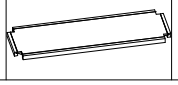	Bottom Shelf	1pc

No.	HARDWARE LIST		Q'ty
1		Bolts 5/16x50mm	12pcs
2		Lock Washer 5/16	12pcs
3		Flat Washer 5/16	12pcs
4		Allen key K4	1pcs

Step 1 : Use your hand to pull the drawer out.

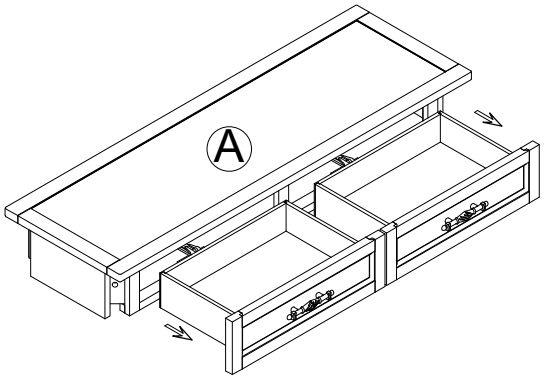

Step 2 :Align and place Legs (B) into Console table frame (A). Use Bolt (1), lock washer(2), flat washer(3) then do not fully tighten bolt places.

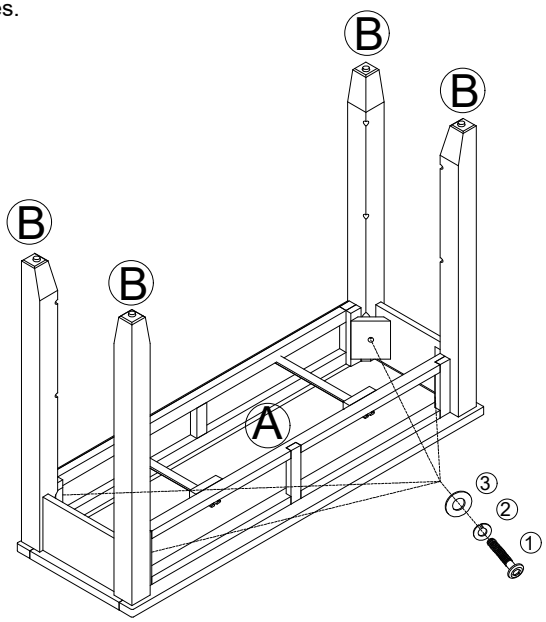

Step 3 :Align and place Upper Shelf (C) into 4 Legs(B). Use Bolt (1), lock washer(2), flat washer(3) then do not fully tighten bolt places.

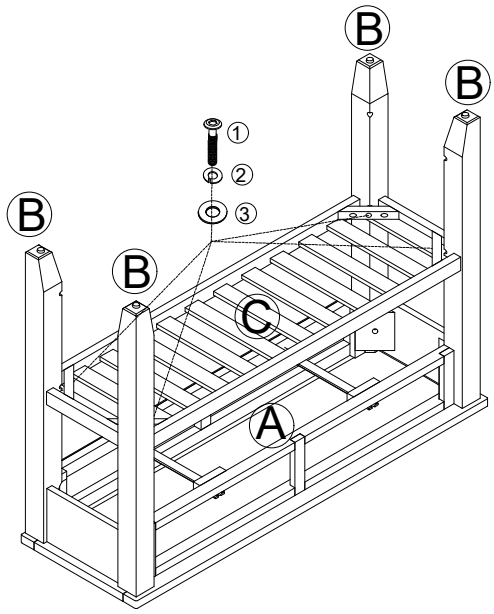

ASSEMBLY INSTRUCTION

Step 4 : Align and place Bottom Shelf (D) into legs (B). Use Bolt (1), lock washer(2), flat washer(3).Then use Allen key (4) fully tighten bolt places.

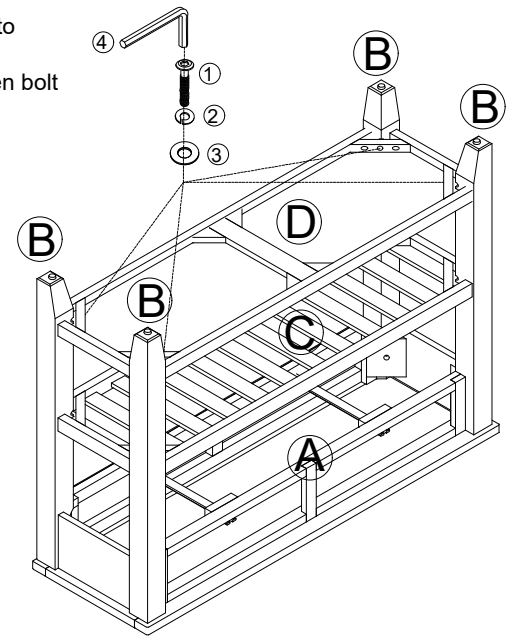

Step 5 : Use your hand to push the drawer into the Console table.

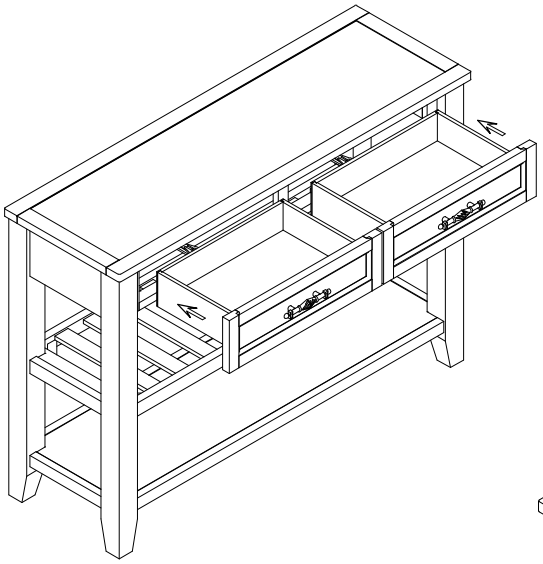

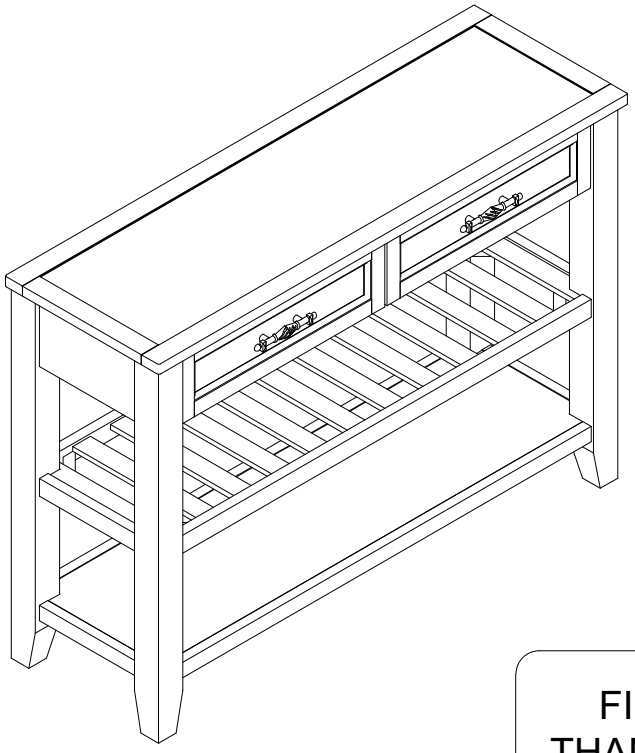

FINISH .
THANK YOU !