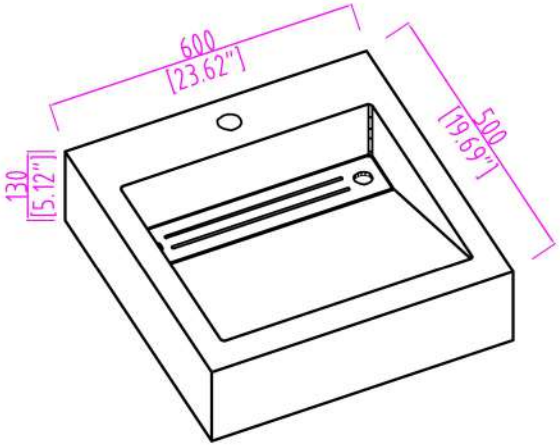
600
[23.62"]
500
[19.69"]
130
[5.12"]

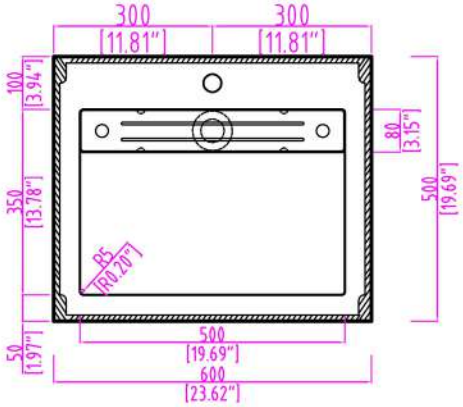
300
[11.81"]
300
[11.81"]
100
[3.94"]
350
[13.78"]
50
[1.97"]
80
[3.15"]
500
[19.69"]
R5
[R0.20"]
500
[19.69"]
600
[23.62"]

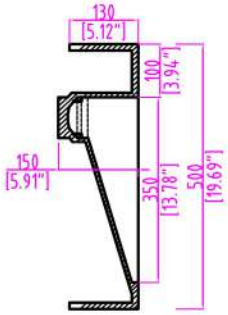
130
[5.12"]
100
[3.94"]
150
[5.91"]
350
[13.78"]
500
[19.69"]

FELIX-1624