WOODBRIDGE®

DIMENSIONS/TECHNICAL DATA

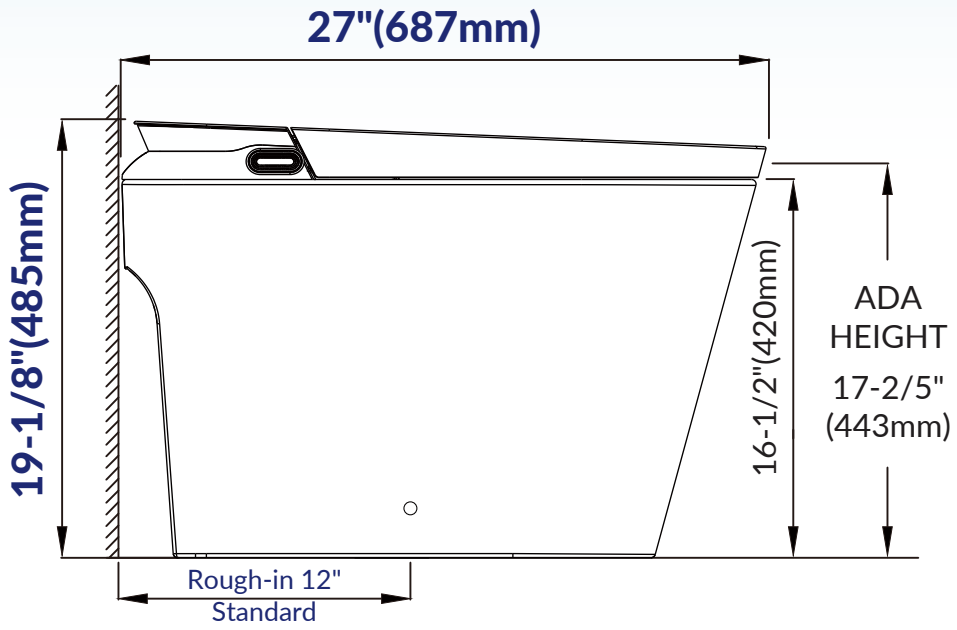

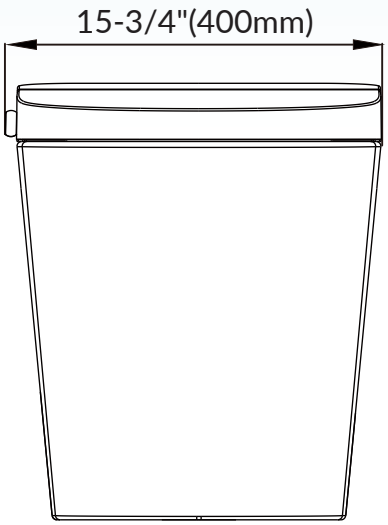

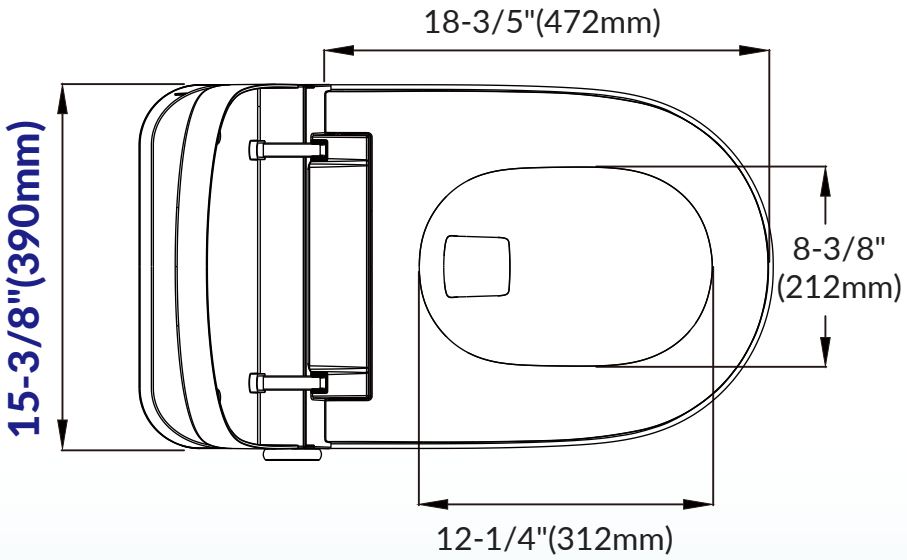

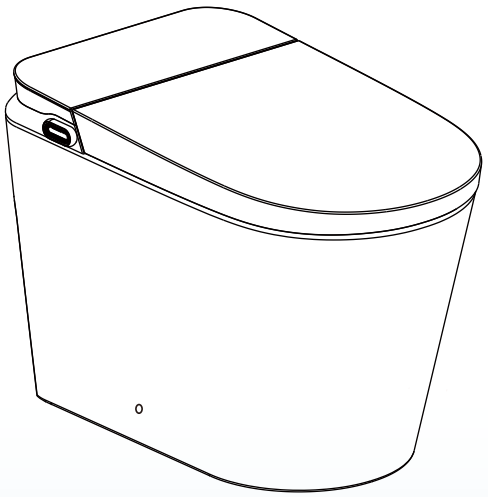

ATTENTION! Dimensions may vary by up to 3/8". It is highly recommended to pull all dimensions of actual model for installation and measuring purposes.

WOODBRIDGE®

DIMENSIONS/TECHNICAL DATA





ATTENTION! Dimensions may vary by up to 3/8". lt is highly recommended to pull all dimensions of actual model for installation and measuring purposes.

Installation Diagram:

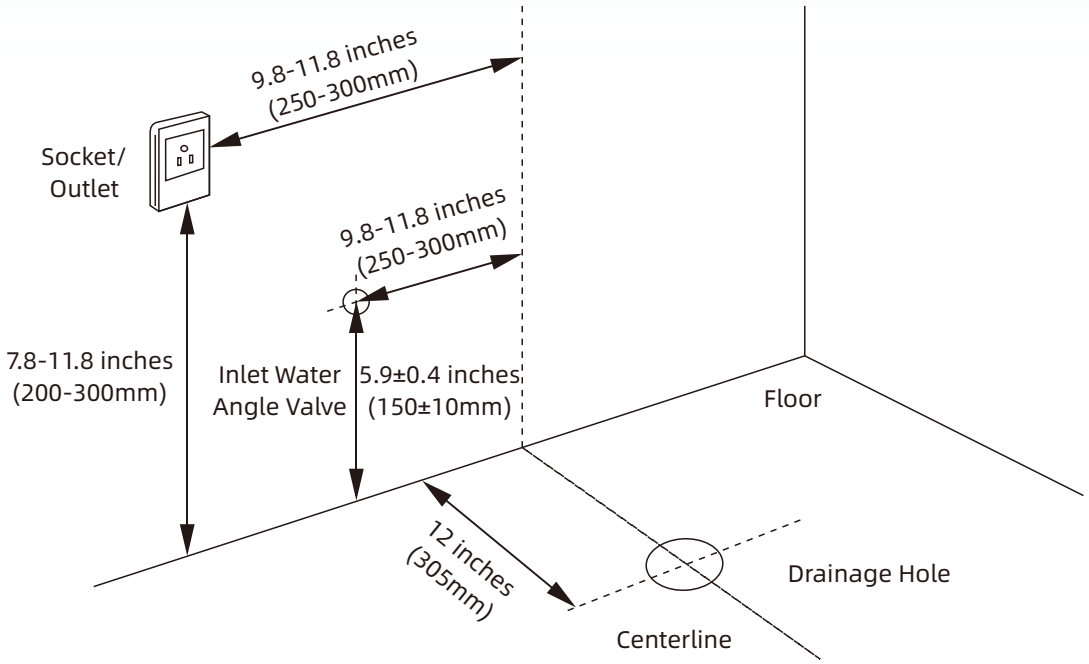

WARNING

Power Outlet Installation Instructions:

- Ensure that the power outlet is properly grounded in accordance with applicable electrical codes.
- The power cord should have a length of 1.5 meters. The location of the power outlet should be in close proximity to facilitate the installation and disassembly of this product, while also maintaining a safe distance from the bathtub area.
- It is strongly recommended to use a waterproof-type outlet. Do not use extension cords to connect this product. Failure to follow these instructions could result in fire or electrical shock.