artos®

F801-5 INSTALLATION GUIDE

kascade 8” lav faucet

BRUSHED NICKEL(BN)



CHROME(CH)

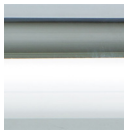



©2018 ed. All technical and pricing information is subject to change without prior notice. To confirm accuracy check with Artos customer service.

artos®

F801-5 OPERATING SPECIFICATIONS

kascade 8” lav faucet



FEATURES
Valve bodies included
Waterfall Flow

OPERATING PRESSURE
Minimum: 15 psi
Maximum: 75 psi
Above 90psi it may be necessary to install a pressure reducer

OPERATING TEMPERATURE
Maximum: 176°

FLOW RATE
1.2 USGPM

APPROVALS

©2018 ed. All technical and pricing information is subject to change without prior notice. To confirm accuracy check with Artos customer service.

artos®

F801-5 PRODUCT DIMENSIONS

kascade 8" lav faucet

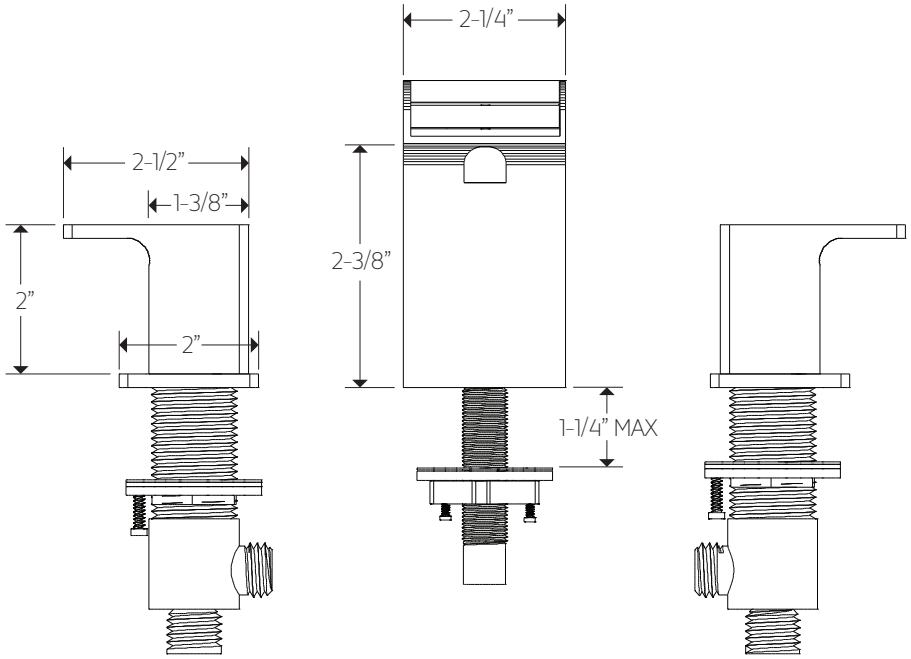

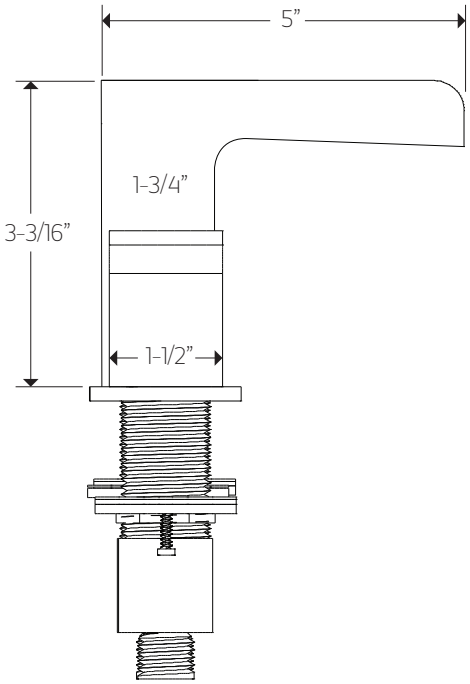

©2018 ed. All technical and pricing information is subject to change without prior notice. To confirm accuracy check with Artos customer service.

artos®

F801-5

kascade 8” lav faucet

STEP 1

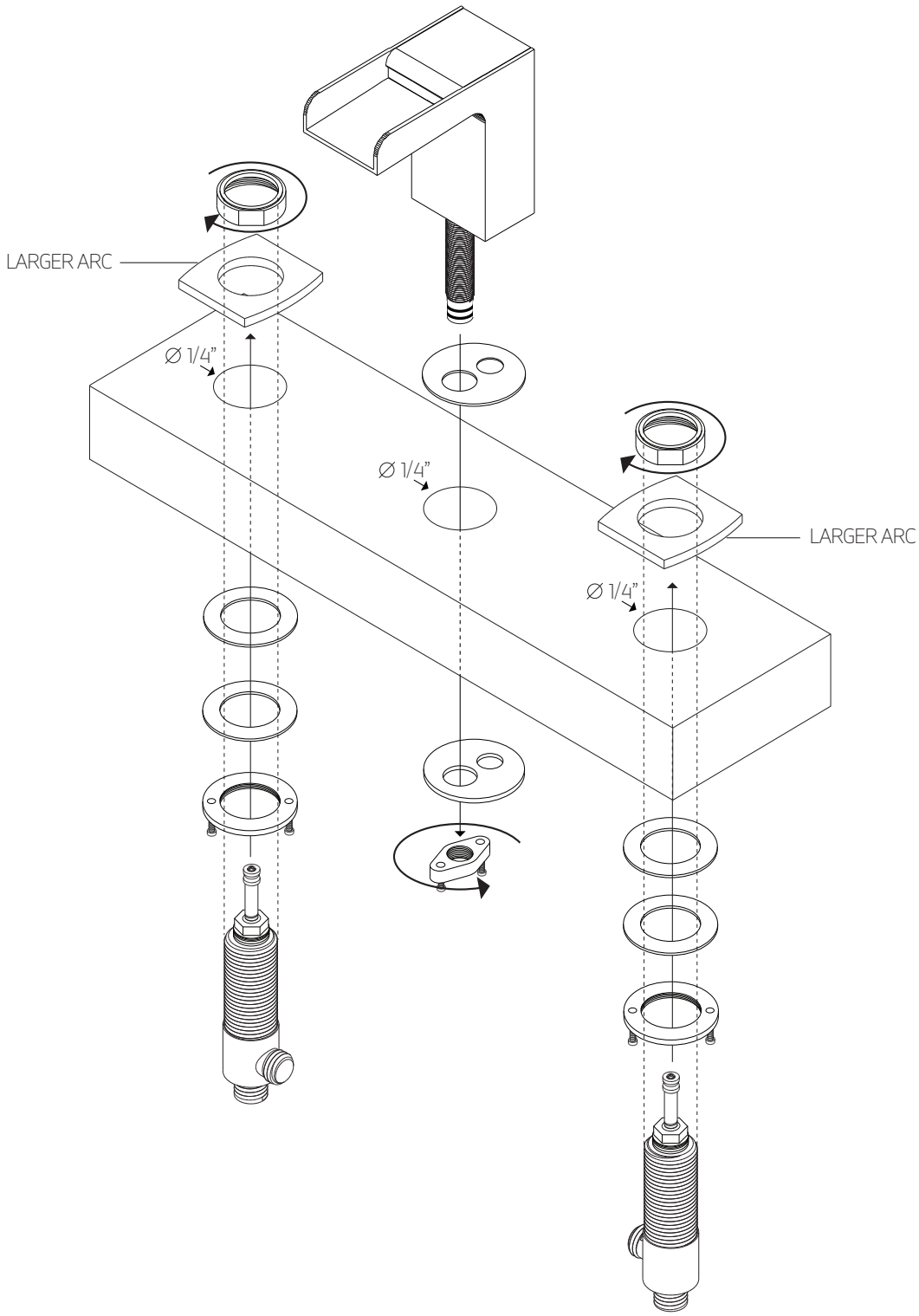

WESTOVER, INC **13305 B STREET OMAHA, NEBRASKA 68144** **WWW.ARTOS.US.COM** **T:877.927.8679**

©2018 ed. All technical and pricing information is subject to change without prior notice. To confirm accuracy check with Artos customer service.

STEP 2

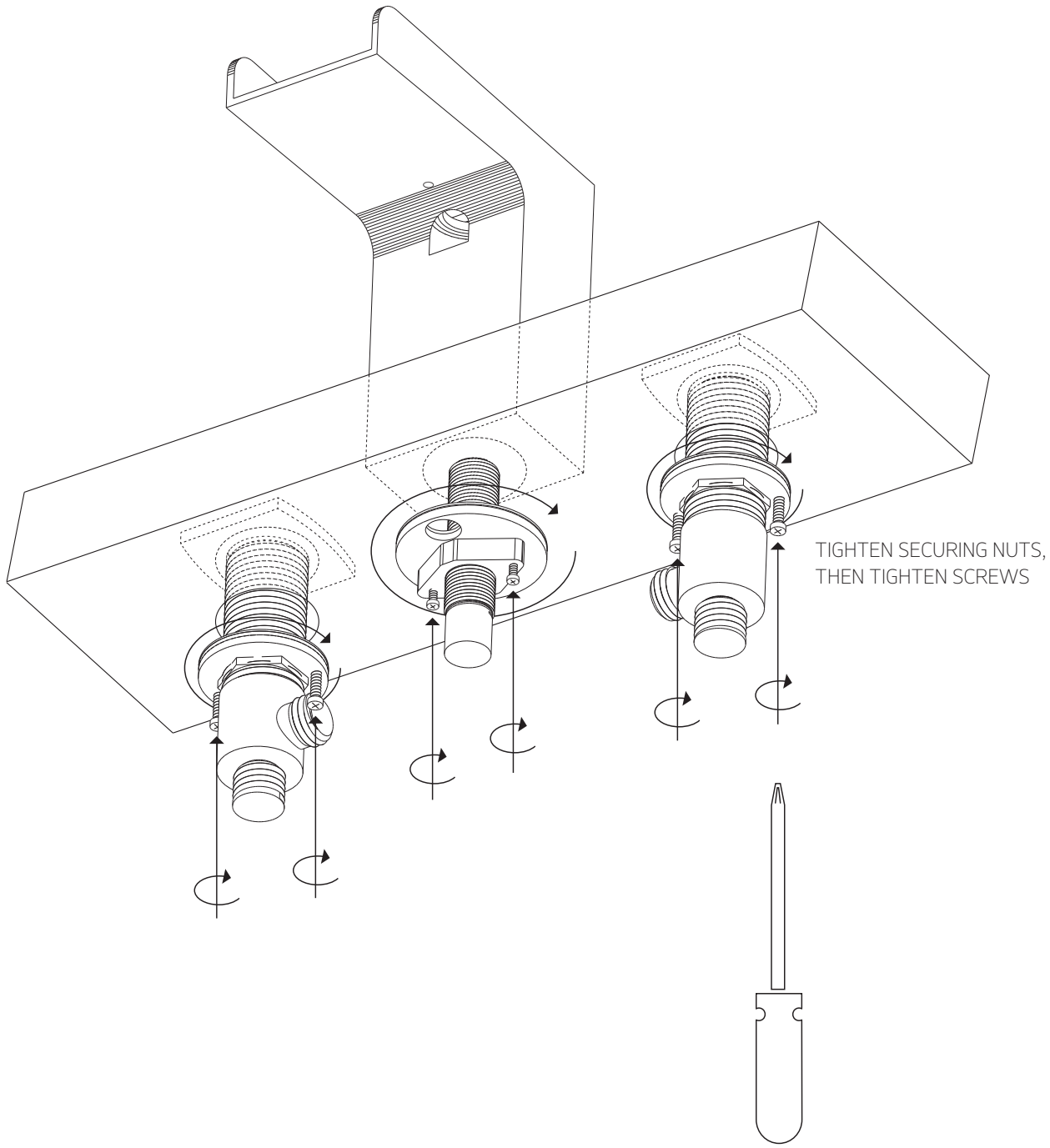

©2018 ed. All technical and pricing information is subject to change without prior notice. To confirm accuracy check with Artos customer service.

artos®

F801-5

kascade 8” lav faucet

STEP 3

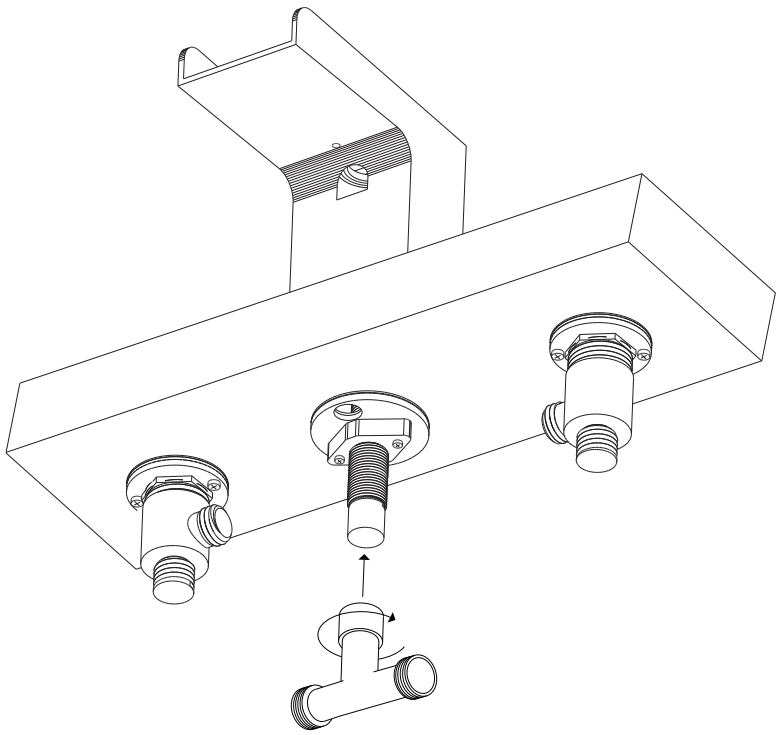

STEP 4

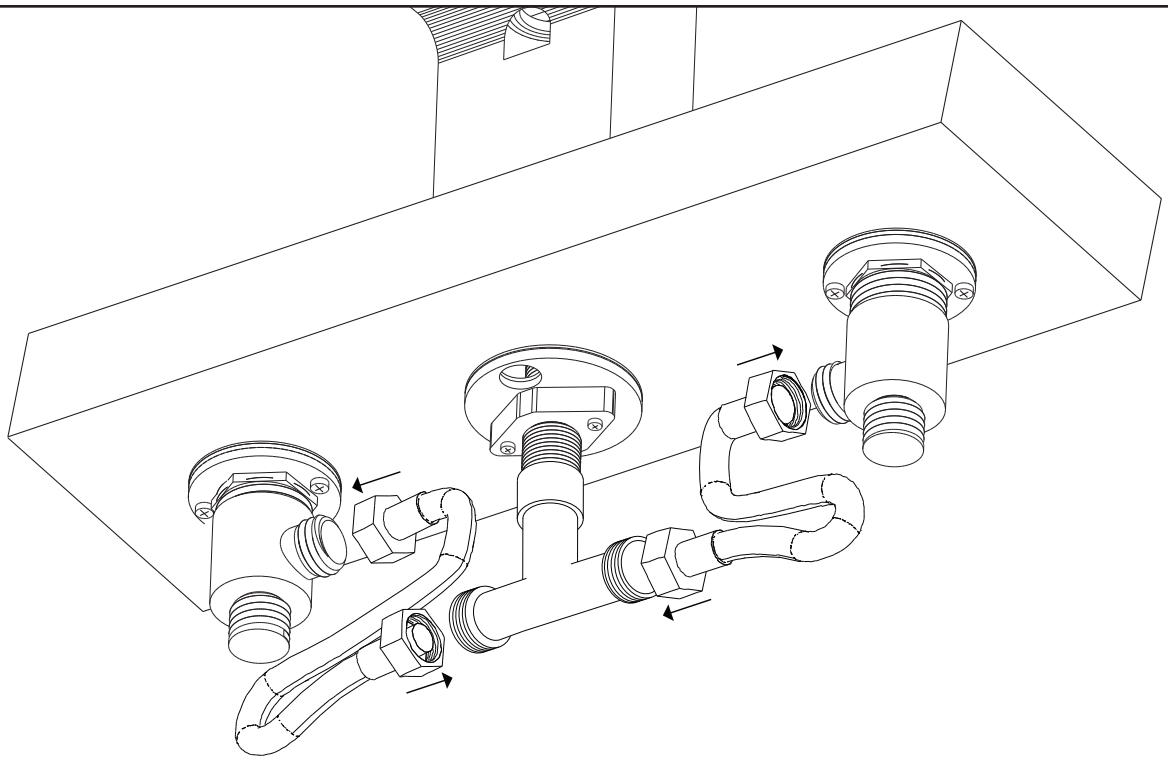

©2018 ed. All technical and pricing information is subject to change without prior notice. To confirm accuracy check with Artos customer service.

STEP 5

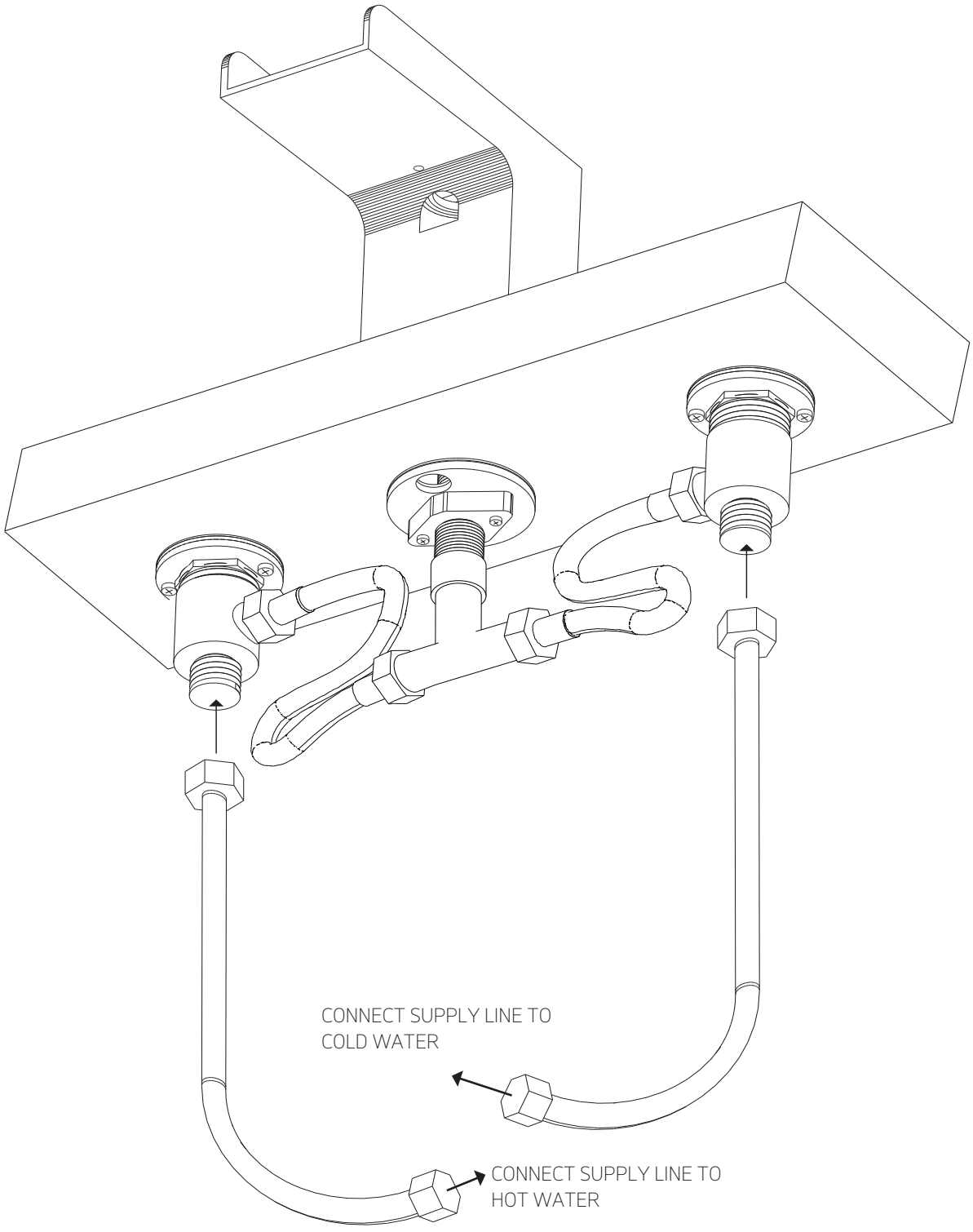

©2018 ed. All technical and pricing information is subject to change without prior notice. To confirm accuracy check with Artos customer service.

artos®

F801-5

kascade 8” lav faucet

STEP 6

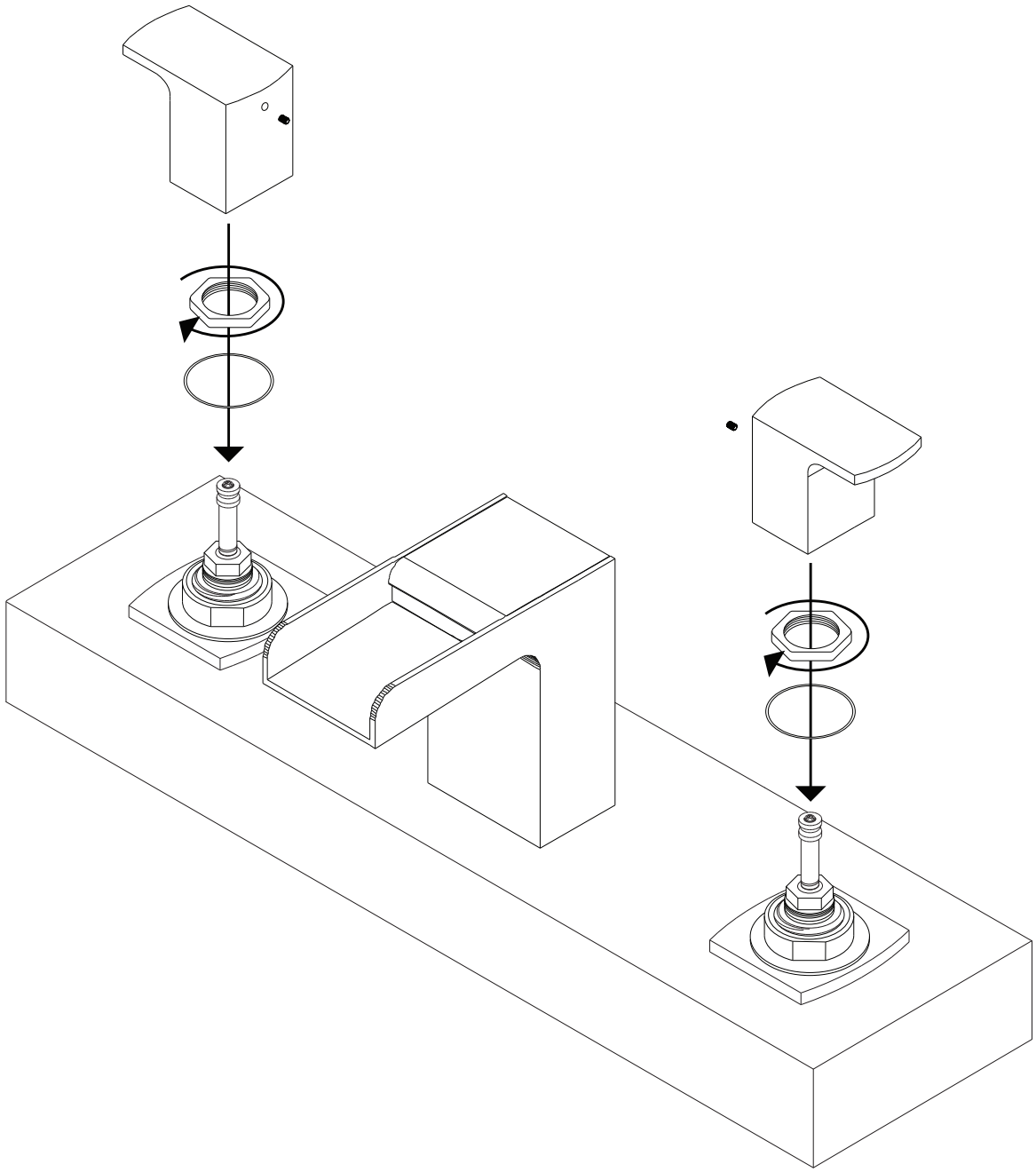

WESTOVER, INC **13305 B STREET OMAHA, NEBRASKA 68144** **WWW.ARTOS.US.COM** **T:877.927.8679**

©2018 ed. All technical and pricing information is subject to change without prior notice. To confirm accuracy check with Artos customer service.

STEP 7

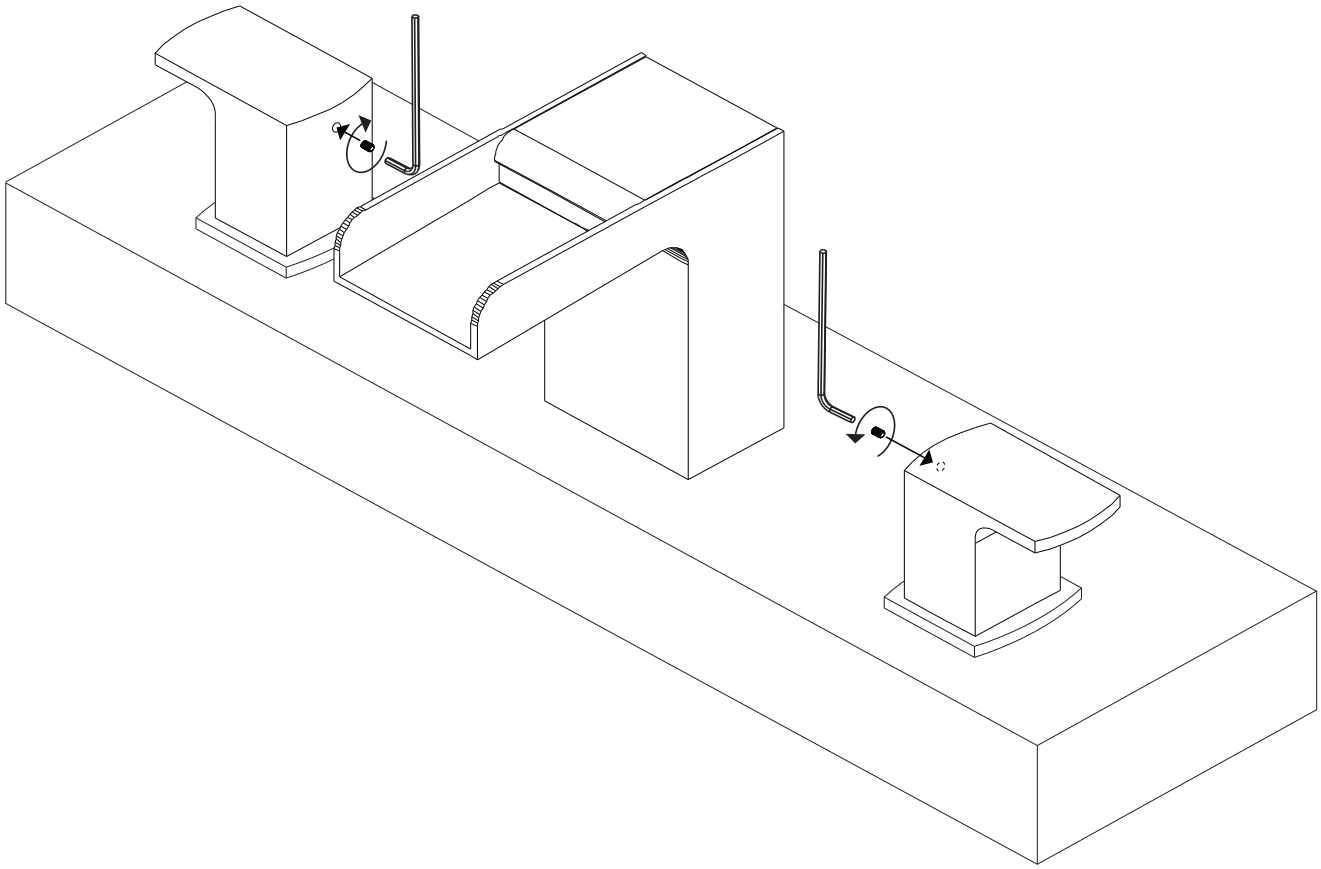

©2018 ed. All technical and pricing information is subject to change without prior notice. To confirm accuracy check with Artos customer service.

artos®

F801-5 PARTS BREAKDOWN

kascade 8" lav faucet

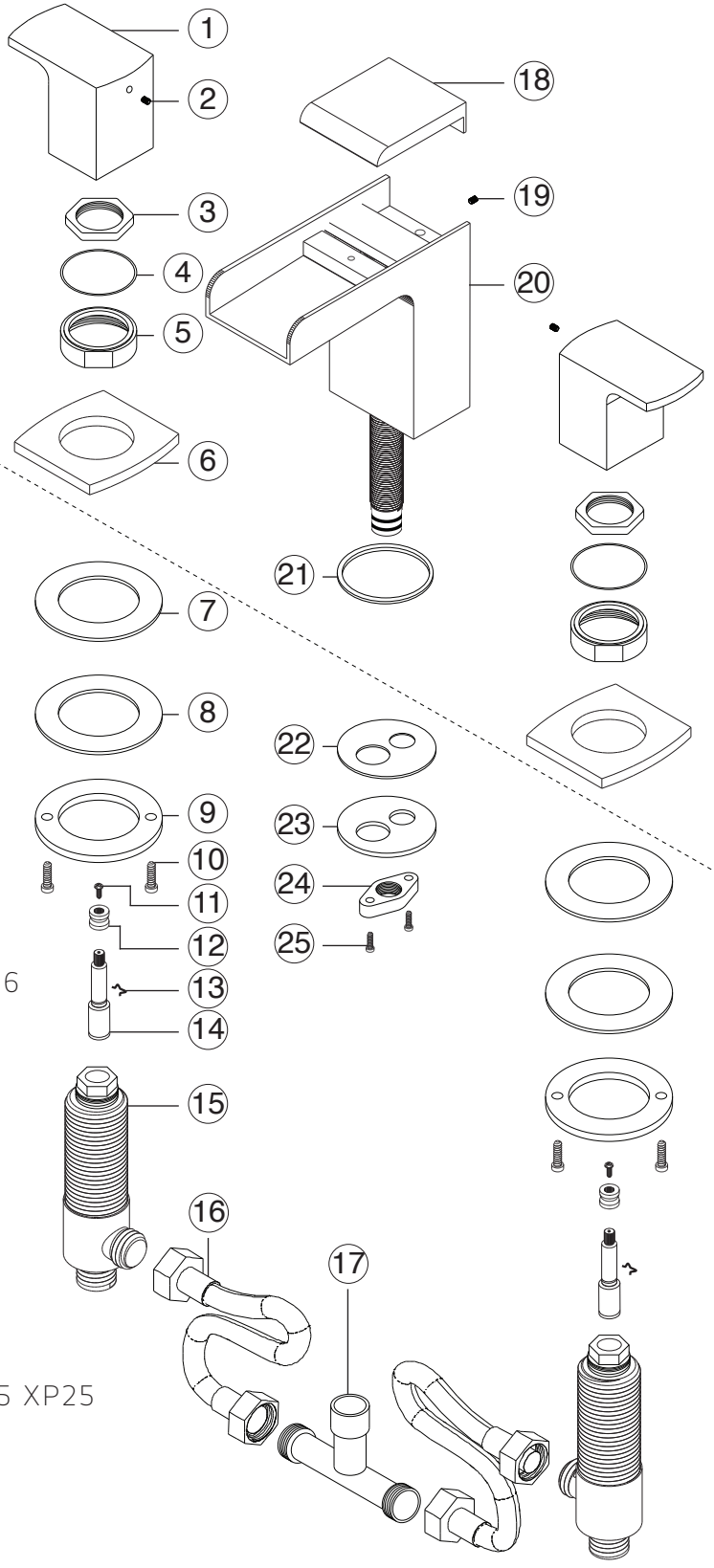

1. **FAUCET HANDLE (2)** F801-5 XP1
2. **HANDLE SET SCREW (2)** F801-5 XP2
3. **CLAMP RING t(2)** F801-5 XP3
4. **HANDLE ANTI-SCOLD RING (2)** F801-5 XP4
5. **ESCUTCHEON SECURING NUT (2)** F801-5 XP5
6. **HANDLE ESCUTCHEON (2)** F801-5 XP6
7. **VALVE RUBBER WASHER (2)** F801-5 XP7
8. **VALVE METAL WASHER (2)** F801-5 XP8
9. **VALVE SECURING NUT (2)** F801-5 XP9
10. **VALVE SECURING NUT SCREWS (4)** F801-5 XP10
11. **CONNECTION BRACKET SCREW (2)** F801-5 XP11
12. **HANDLE CONNECTION BRACKET (2)** F801-5 XP12
13. **VALVE STEM CLIP (2)** F801-5 XP13
14. **VALVE STEM (2)** F801-5 XP14
15. **VALVE BODY (2)** F801-5 XP15
16. **VALVE TO FAUCET SUPPLY HOSE (2)** F801-5 XP16
17. **FAUCET BODY CONNECTION TEE** F801-5 XP17
18. **FAUCET BODY COVER** F801-5 XP18
19. **FAUCET BODY TOP SET SCREW** F801-5 XP19
20. **FAUCET BODY** F801-5 XP20
21. **FAUCET BODY DECK GASKET** F801-5 XP21
22. **FAUCET BODY RUBBER WASHER** F801-5 XP22
23. **FAUCET BODY METAL WASHER** F801-5 XP23
24. **DOUBLE WEDGE NUT** F801-5 XP24
25. **FAUCET BODY SECURING NUT SCREWS (2)** F801-5 XP25

WESTOVER, INC **13305 B STREET OMAHA, NEBRASKA 68144** **WWW.ARTOS.US.COM** **T:877.927.8679**

©2018 ed. All technical and pricing information is subject to change without prior notice. To confirm accuracy check with Artos customer service.

artos®

F801-5

kascade 8" lav faucet

CARE & MAINTENANCE

For best results, keep the following in mind to retain the high quality finish of your artos® faucets:

- Use a soft, dampened sponge or cloth. On no account should you use an abrasive material such as a brush, scouring pad or steel wool to clean surfaces.
- Test your cleaning agent solution on an inconspicuous area before applying to the entire faucet.
- Wipe surfaces clean and rinse completely with water immediately after applying cleaning agent.
- An ideal cleaning technique is to rinse faucet thoroughly and blot dry any water from the surface after each use.

LIMITED LIFETIME WARRANTY

Artos® Limited Lifetime Warranty

Artos® faucets have been manufactured under the highest quality and manufacturing standards. Artos® faucets are guaranteed for life against leaks and manufacturing defects for as long as the original consumer purchaser owns it. This warranty applies to installations in the US, Canada and Mexico (North America). Commercial, Industrial or business uses are warranted for a period of one year from the original date of purchase.

This warranty is non-transferable and applies exclusively to the original owner or end-user. If a defect is found during normal use, Artos® will, at its election, repair, replace or make an appropriate adjustment. Damage caused by accident, misuse, abuse, improper installation or alteration will void the warranty. This warranty does not cover replacement parts where damage is caused by normal wear and tear. Labor charges, installation or other incidental or consequential costs will not be covered.

Replacement parts that qualify for warranty repair can be obtained by contacting Artos® at 1-877-9ARTOS9 or by e-mail at info@artos.us.com. Proof of purchase (original sales receipt) from the original consumer purchaser must accompany all warranty claims. When submitting your claim in writing, please provide your name, address and telephone number.

Please register this product online at WWW.ARTOS.US.COM

Item No: **F801-5**
Serial No:

©2018 ed. All technical and pricing information is subject to change without prior notice. To confirm accuracy check with Artos customer service.