Model number:
**NT-354-600-RH**

# DIMENSIONS

Streamline

## Rough-In Dimensions

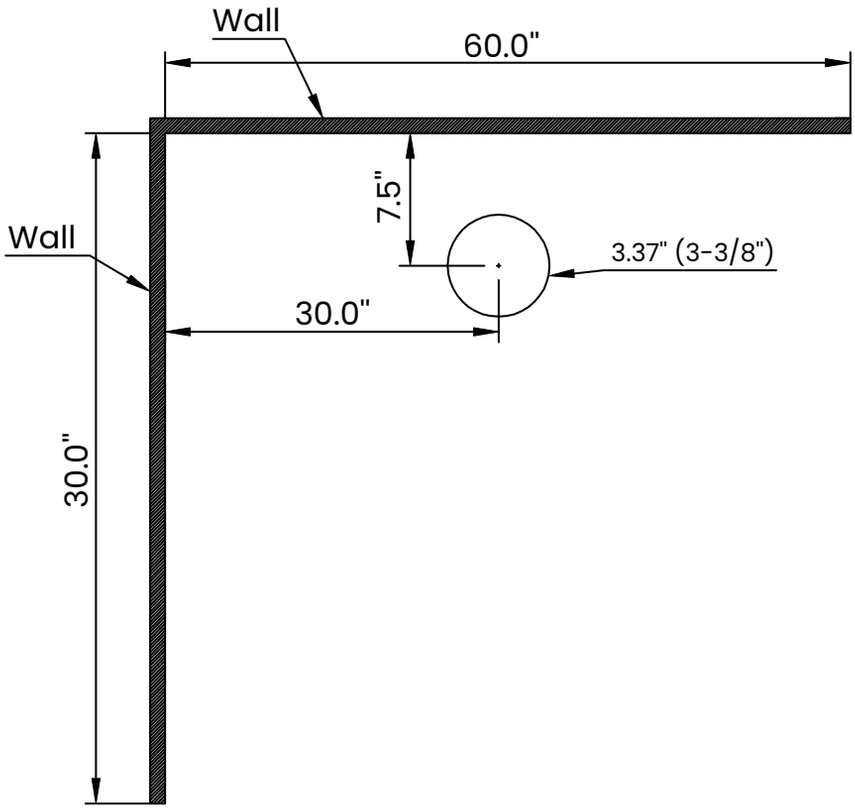


## Product Dimensions

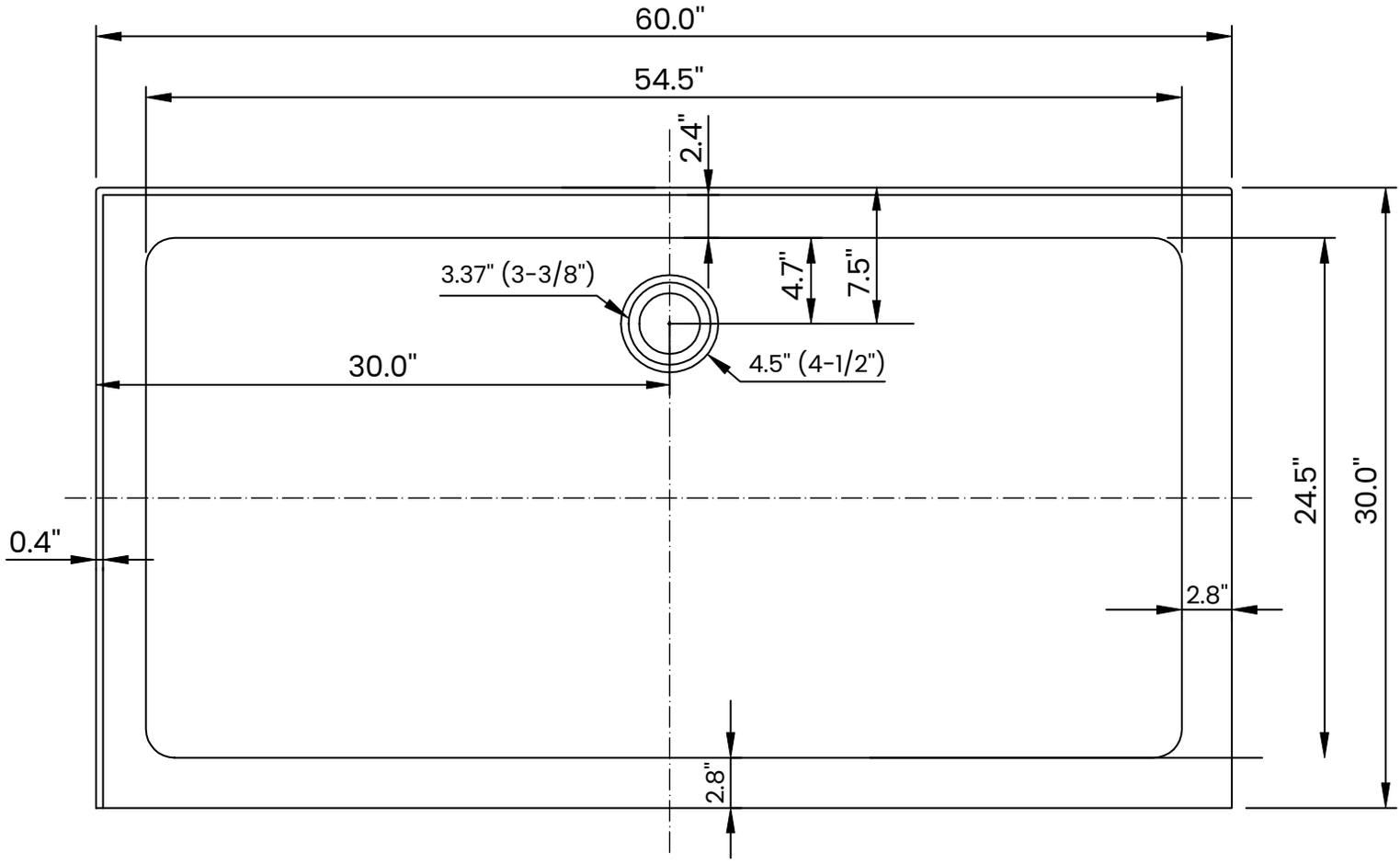

Model number:
**NT-354-600-RH**

# DIMENSIONS

Streamline

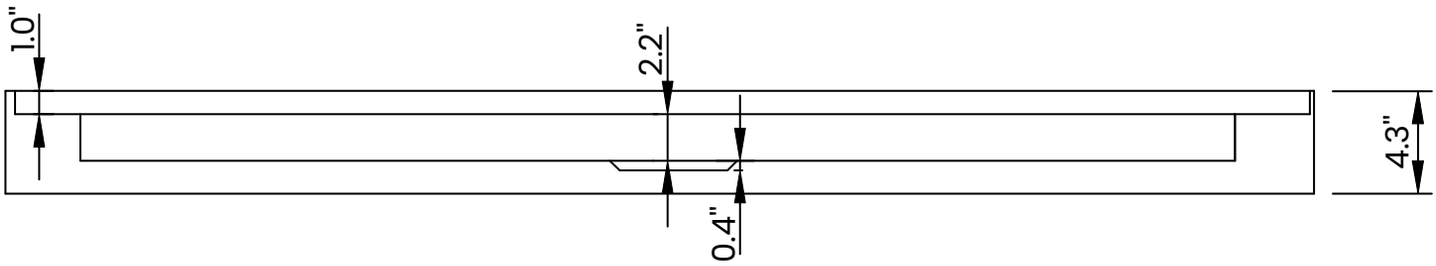


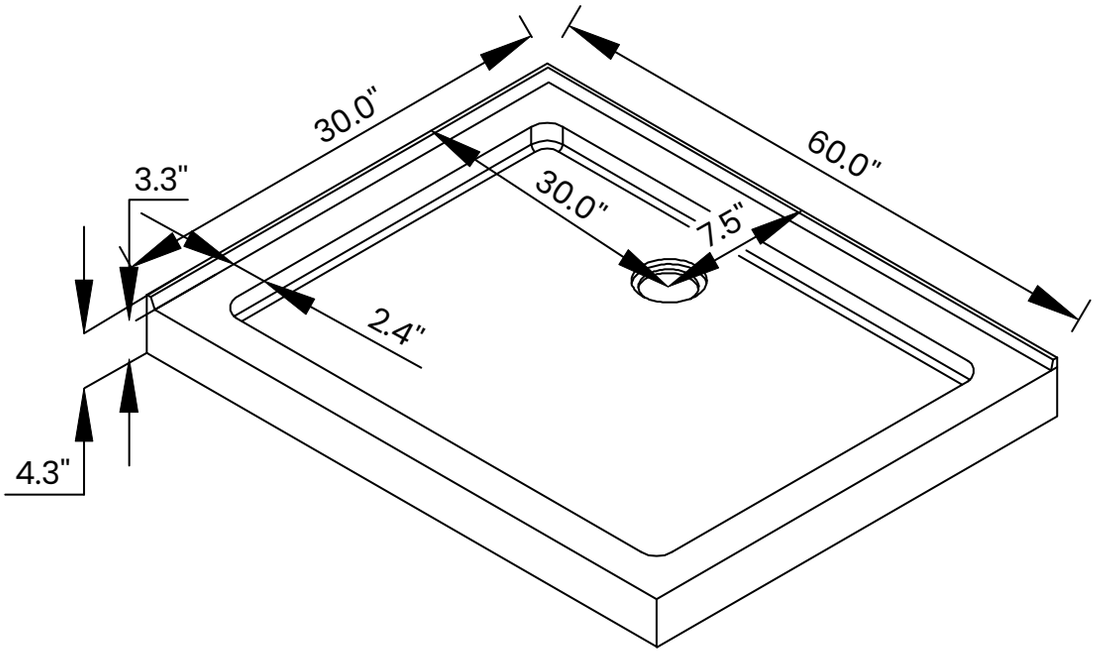

Model number:
**P-120-CH**

# DIMENSIONS
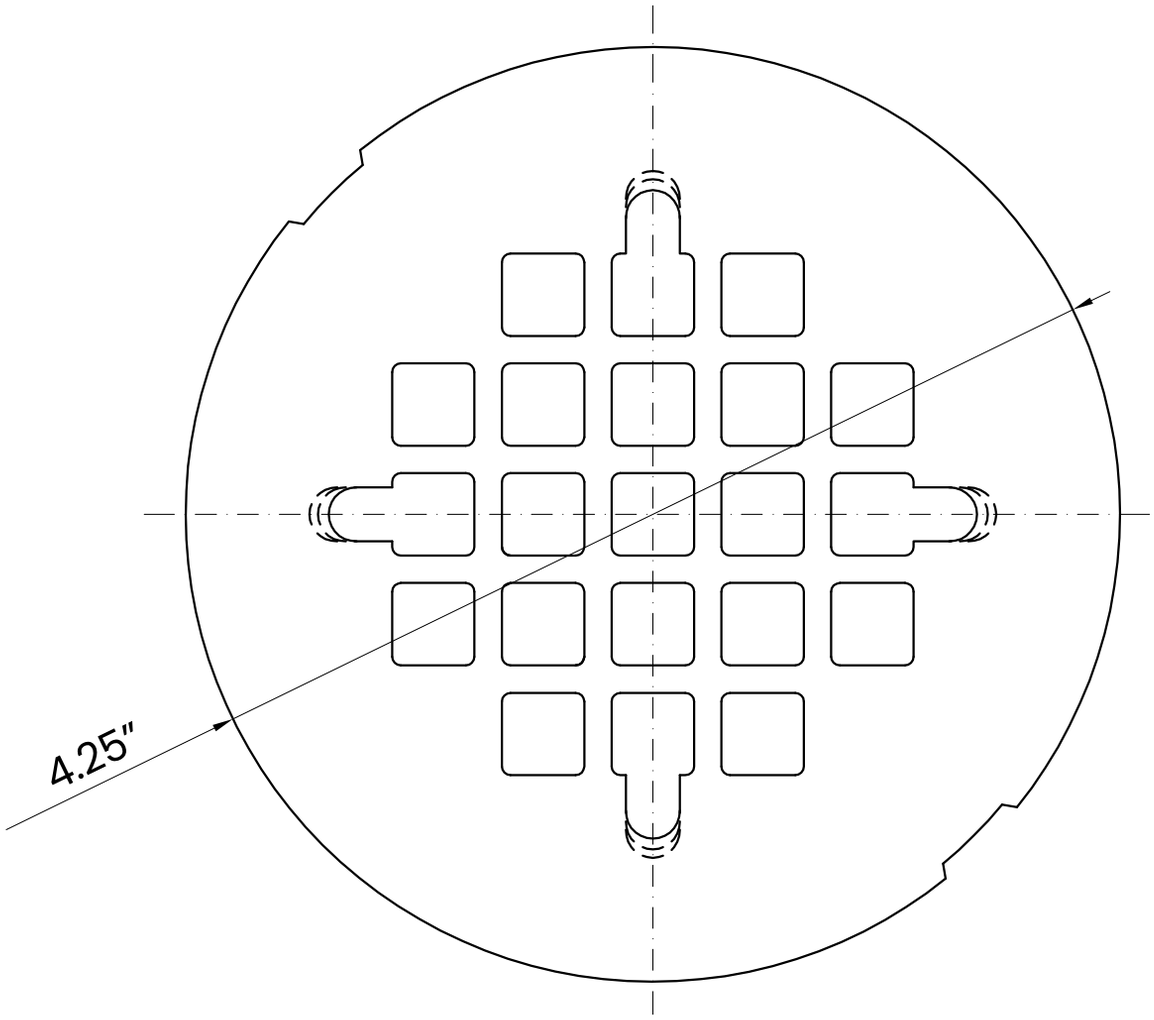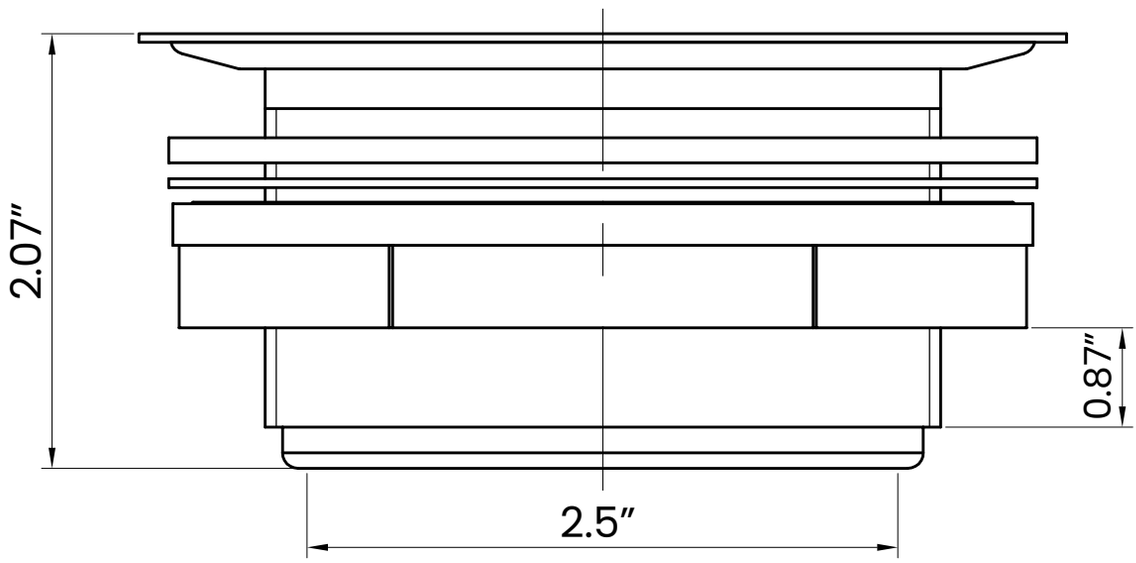
Streamline