INSTALLATION
Product Manual

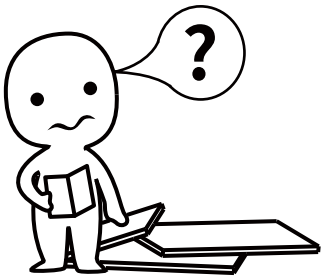

IMPORTANT INFORMATION!

Please read the entire manual before starting to assemble and/or using this product. Follow the manual thoroughly and keep it for further reference.

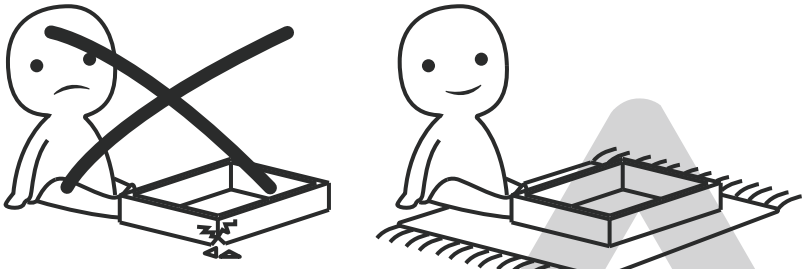

AVOID SCRATCHES!

In order to avoid scratching this furnuture should be assembled on a soft layer-could be a rug.

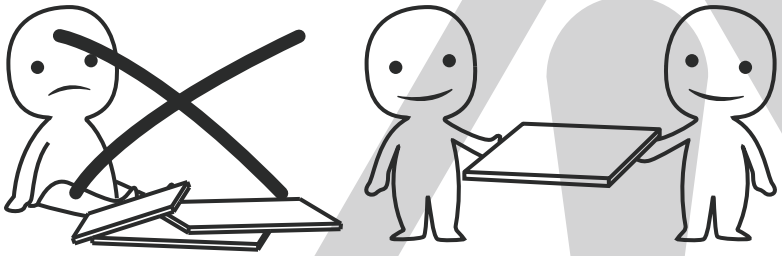

IMPROVE EFFICIENCY !

Try to find a partner to install with you, which can speed up the installation efficiency and shorten the time.

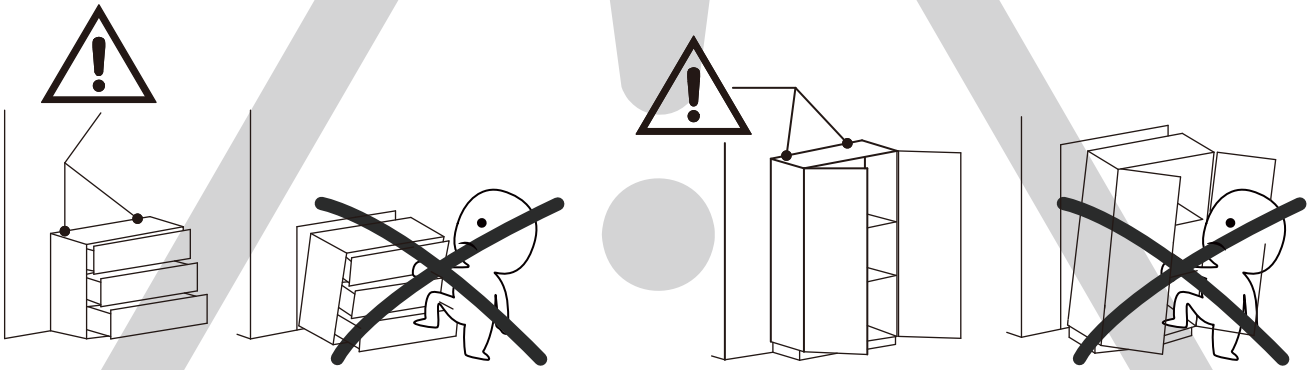

ANTI-TOPPLE WARNING !

Overturned furniture can cause serious or fatal crush injuries. To prevent tipping over, be sure to use the wall attachment, if not included with this product. Please purchase the wall attachment that fit your wall. If unsure, seek professional advice. Please read and follow each step of the instructions carefully.

IMPORTANT !

It is important that any product which is assembled using any kind of screw is re-tightened 2 weeks after assembly,and once every 3 months - in order to assure stability through-out the lifespan of the product.

For regular maintenance and cleaning of the product, for the frame, please use a rag dipped in neutral detergent to fully wipe it, and then dry it with a clean rag.For glass materials, wipe with a rag dampened with water glass cleaner, and then dry with a dry rag.

Do not use an electric screwdriver, and do not use too much force when installing, because the board is easy to break.

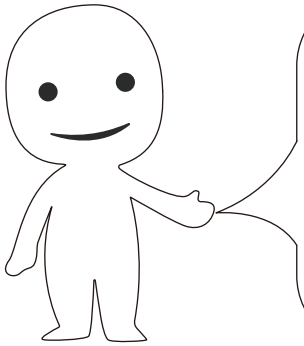

Please prepare the following tools

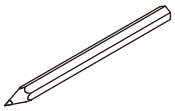
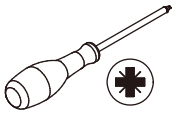
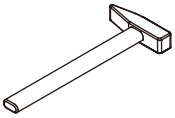





When installing, please carefully confirm whether each screw corresponds to the manual, accessories with similar shapes can be distinguished by size

A x 94	B x 94	C x 133	D x 7
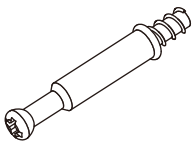			
∅6 x 35 mm	∅15 x 9.6 mm	∅7.8 x 30 mm	∅7.8 x 20 mm

E x 28	F x 6	G x 3	H x 8
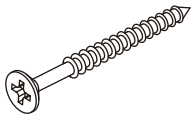	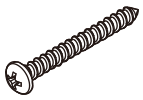		
∅5 x 50 mm	∅4 x 50 mm	∅4 x 40 mm	∅4 x 30 mm

I x 12	J x 2	K x 14	L x 10
			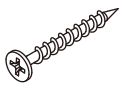
∅4 x 22 mm	∅4 x 14 mm	∅20 x 25 mm	∅3.8 x 35 mm

M x 3	N x 24	O x 2	P x 160
	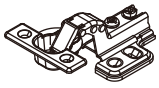	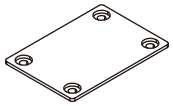	
26 x 17 mm	∅35 mm	40 x 28 mm	∅4 x 14 mm

Q x 3	R x 9	S x 3	T x 2
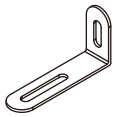	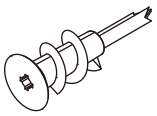		
66 x 15 mm	∅13 x 40 mm	∅4 x 12 mm	20 x 39 mm

U x 24	V x 58	W x 58	X x 4
			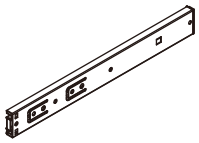
32 x 15 mm	14 x 13 mm	∅3 x 16 mm	300 mm

Y x 24	Z x 24
	
∅3.5 x 12 mm	

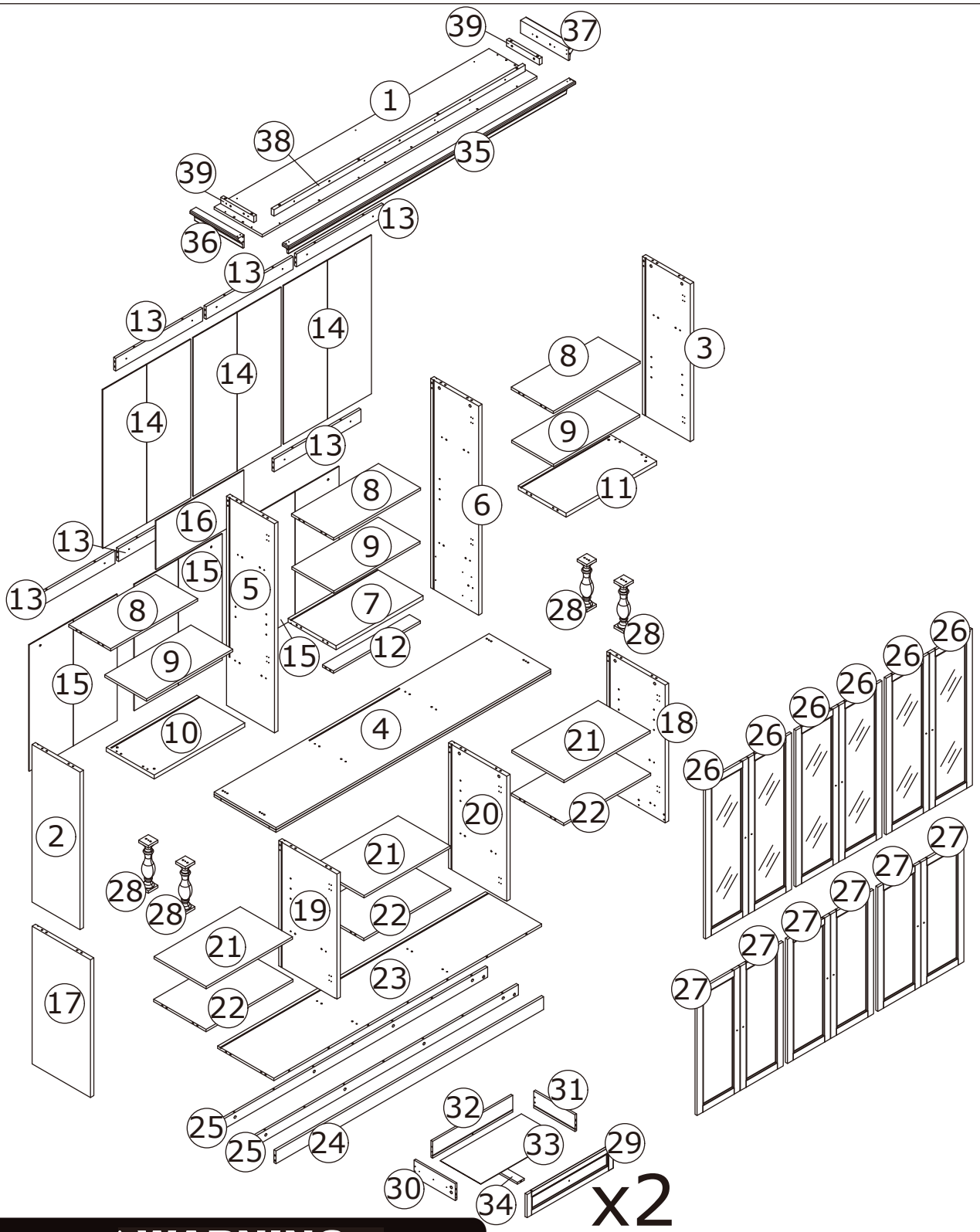

⚠WARNING

Children have died from furniture tipover.To reduce the risk of furniture tipover:

- ALWAYS install Anti-tip device provided.
- NEVER put a TV on this product.
- NEVER allow children to stand,climb or hang on drawers,doors,or shelves.
- NEVER open more than one drawer at a time.
- Place heaviest items in the lowest drawers.

This is a permanent label.
Do not remove!

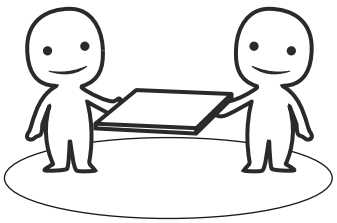

ASSEMBLED BY 2 ADULTS

Sllides Must Be Separated Before Assembly.
After Separated, Set Aside Until Needed for Assembly.

Las diapositivas deben separarse antes del montaje.
Después de la separación, déjelo a un lado hasta que sea necesario.

Les glissières doivent être séparées avant I'assemblage.
Après la séparation, mettez de côté jusqu'au moment de I'assemblage.

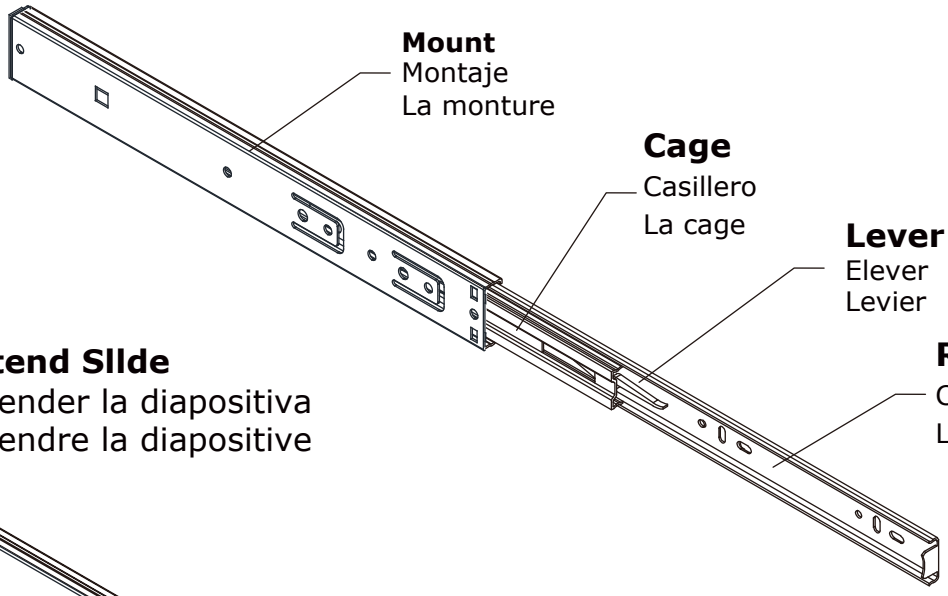

STEP 1: Extend Sllde
Extender la diapositiva
Extendre la diapositive

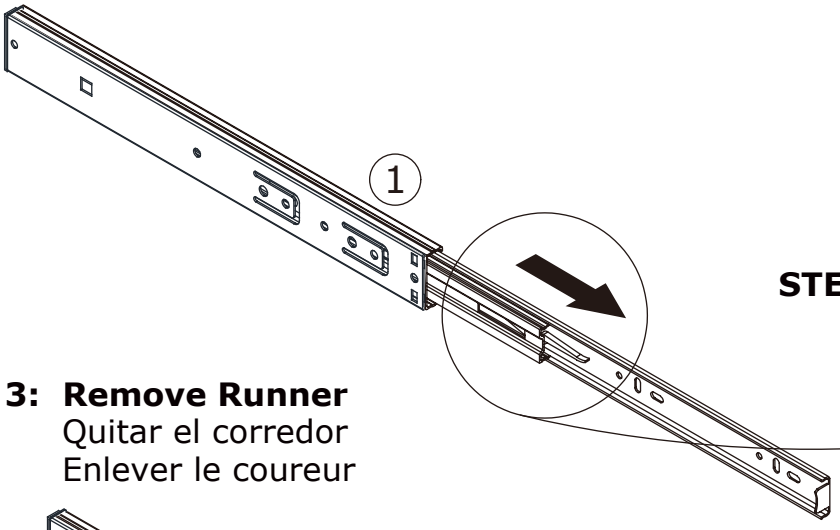

STEP 2: Push Lever UP
Empujar hacia arriba
Lever le levier

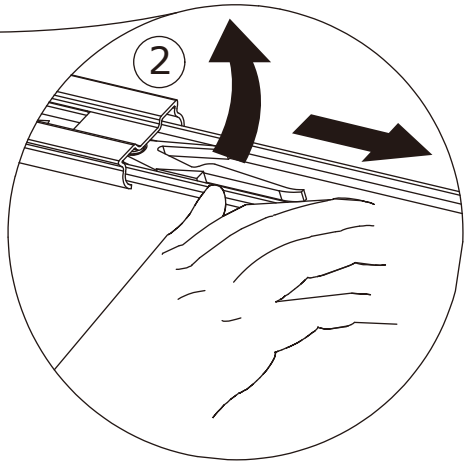

STEP 3: Remove Runner
Quitar el corredor
Enlever le coureur

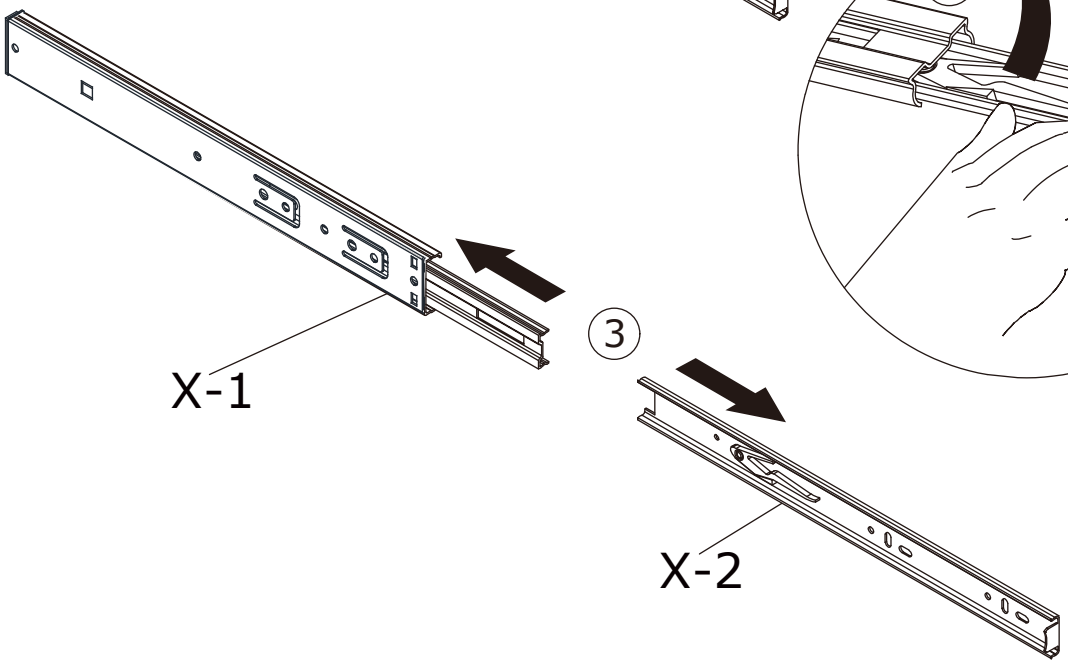

1

A x 12

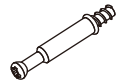

∅6 x 35 mm

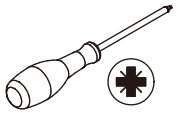

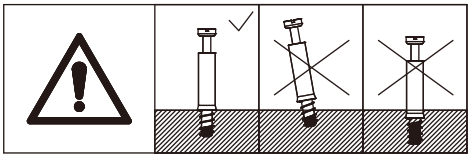

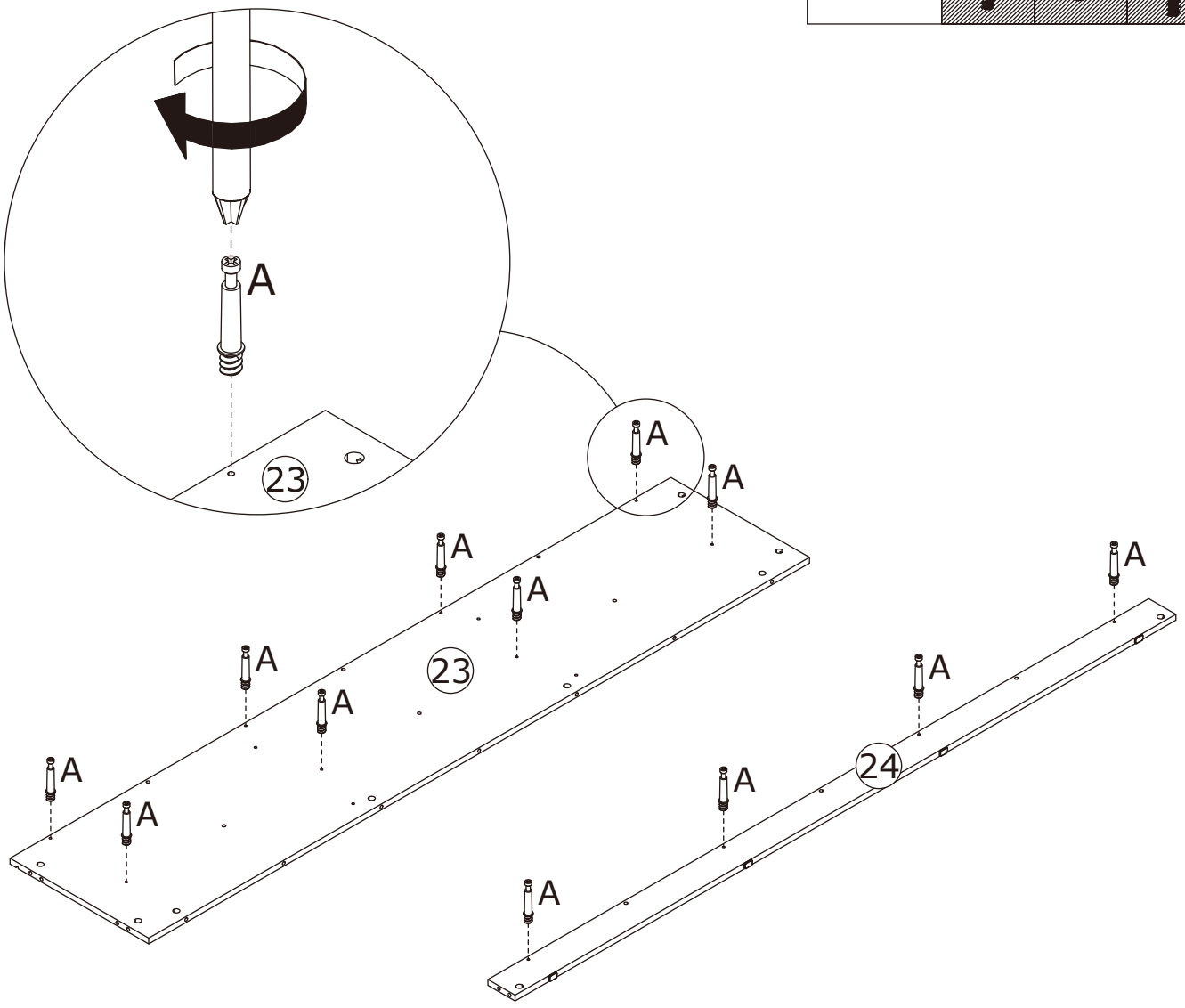

Screw eccentric rod (A) onto Panels 23 and 24.

2

B x 12	C x 9	
		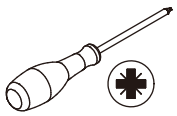
∅15 x 9.6 mm	∅7.8 x 30 mm	

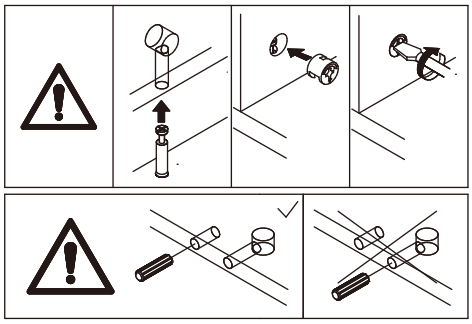

Connect Panels 24 and 25 to Panel 23 using dowel pin (C), then tighten by turning cam lock (B) clockwise.

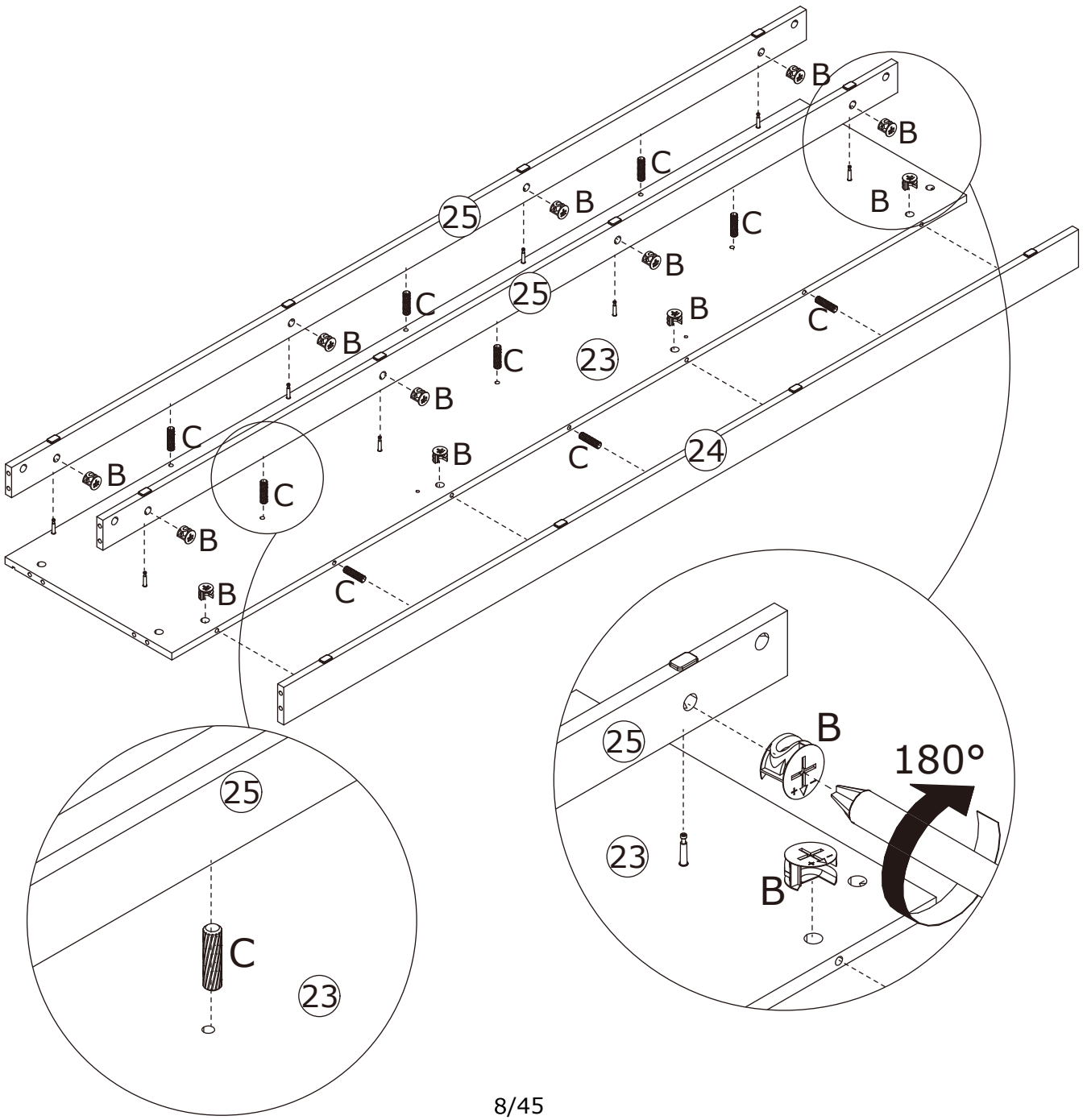

3

A x 6

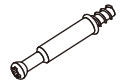

∅6 x 35 mm

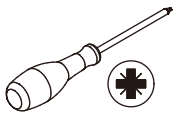

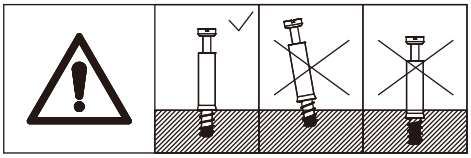

Screw eccentric rod (A) onto Panels 19 and 20.

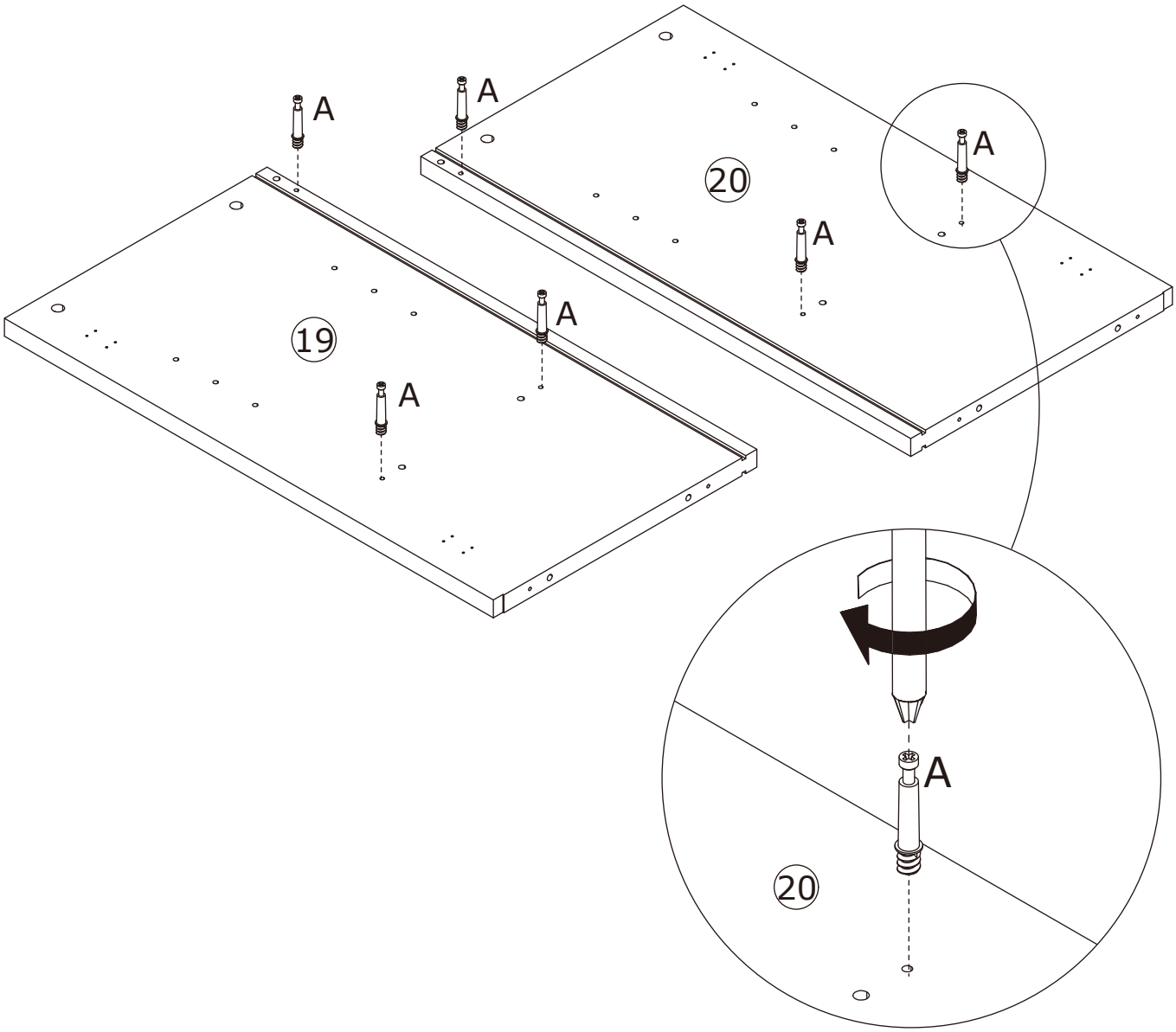

4

B x 6	C x 6	
		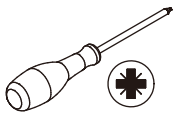
∅15 x 9.6 mm	∅7.8 x 30 mm	

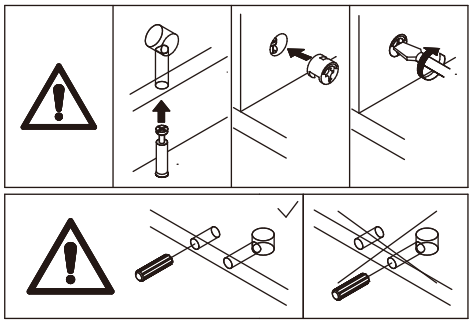

Connect Panels 19 and 20 to Panels 13 and 22 using dowel pin (C), then tighten by turning cam lock (B) clockwise.

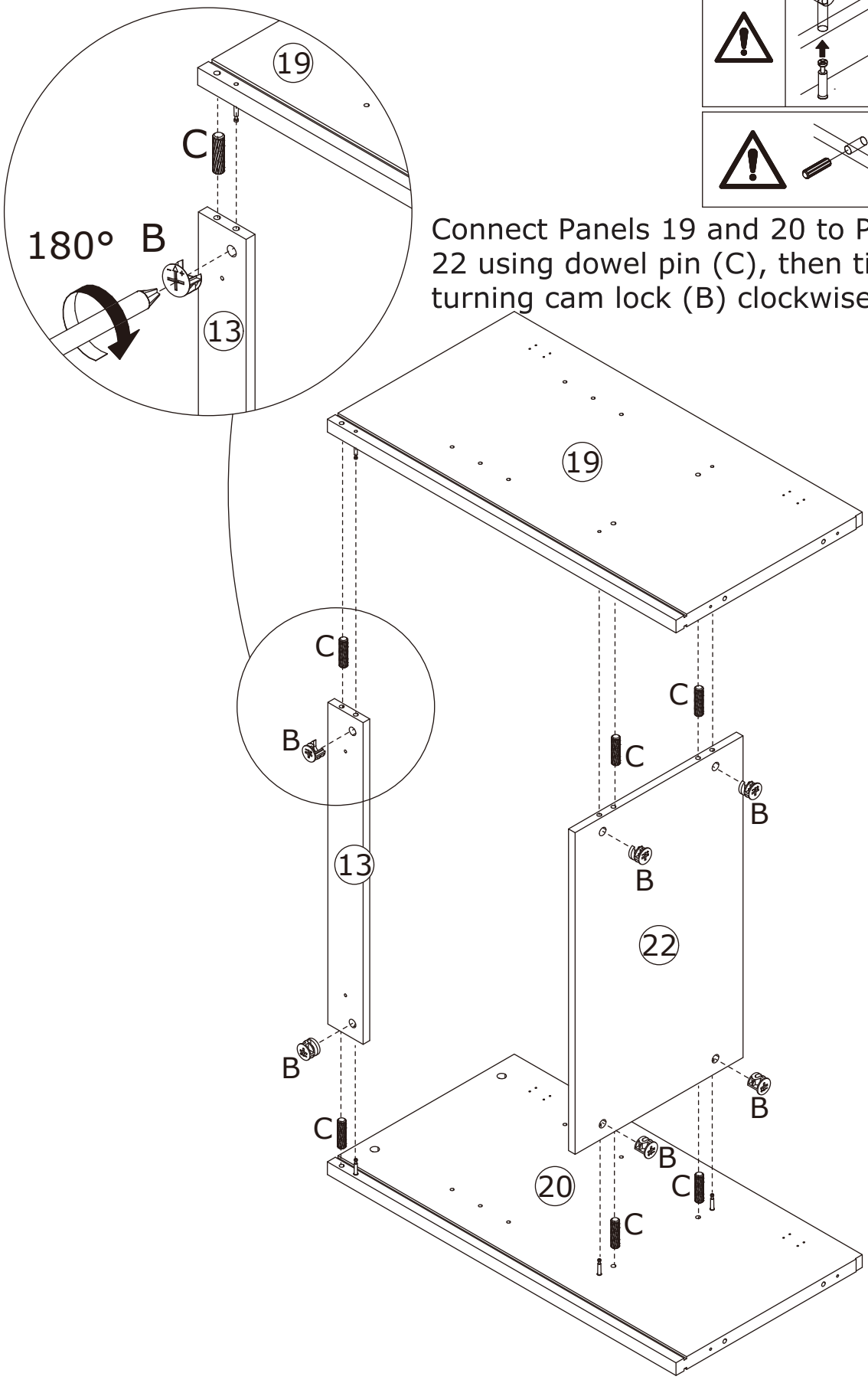

5

A x 6	C x 4	E x 4	
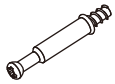		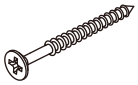	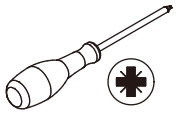
∅6 x 35 mm	∅7.8 x 30 mm	∅5 x 50 mm	

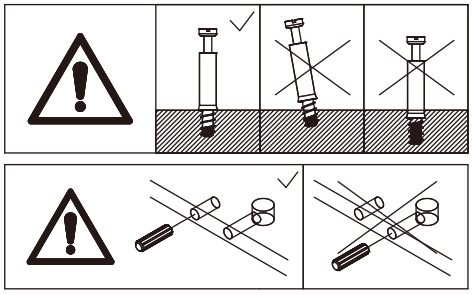

Screw eccentric rod (A) onto Panels 19 and 20.
Connect Panels 19 and 20 to Panel 23 using dowel pin (C), then secure them using screw (E).
Note: Panel 25 is on the top.

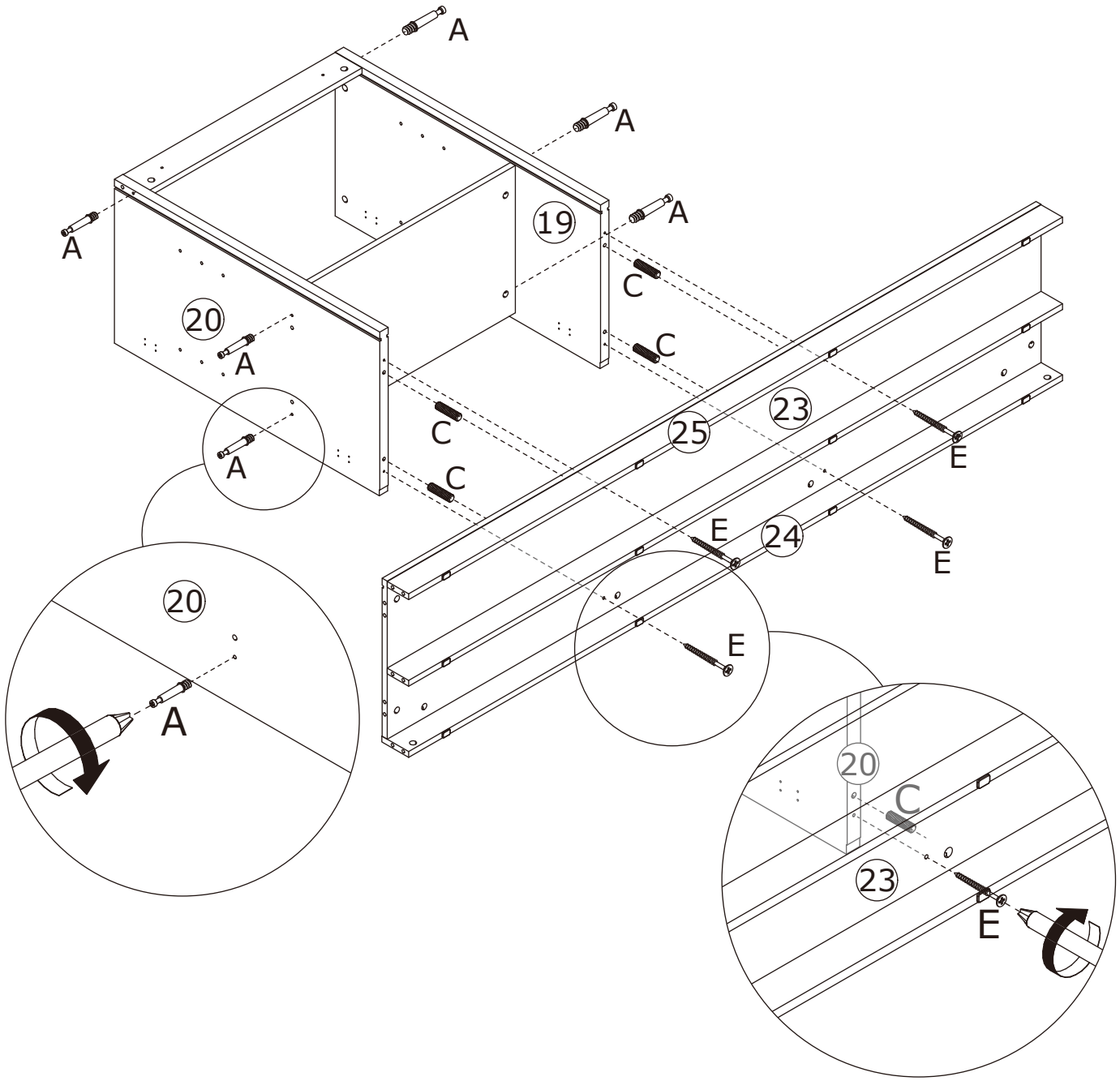

6

B x 4	C x 4	
		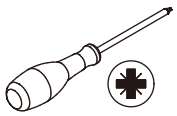
∅15 x 9.6 mm	∅7.8 x 30 mm	

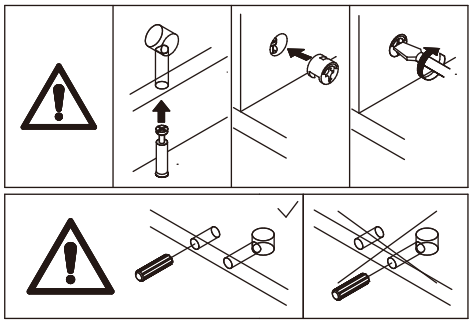

Connect Panel 22 to Panels 19 and 20 using dowel pin (C), then tighten by turning cam lock (B) clockwise.

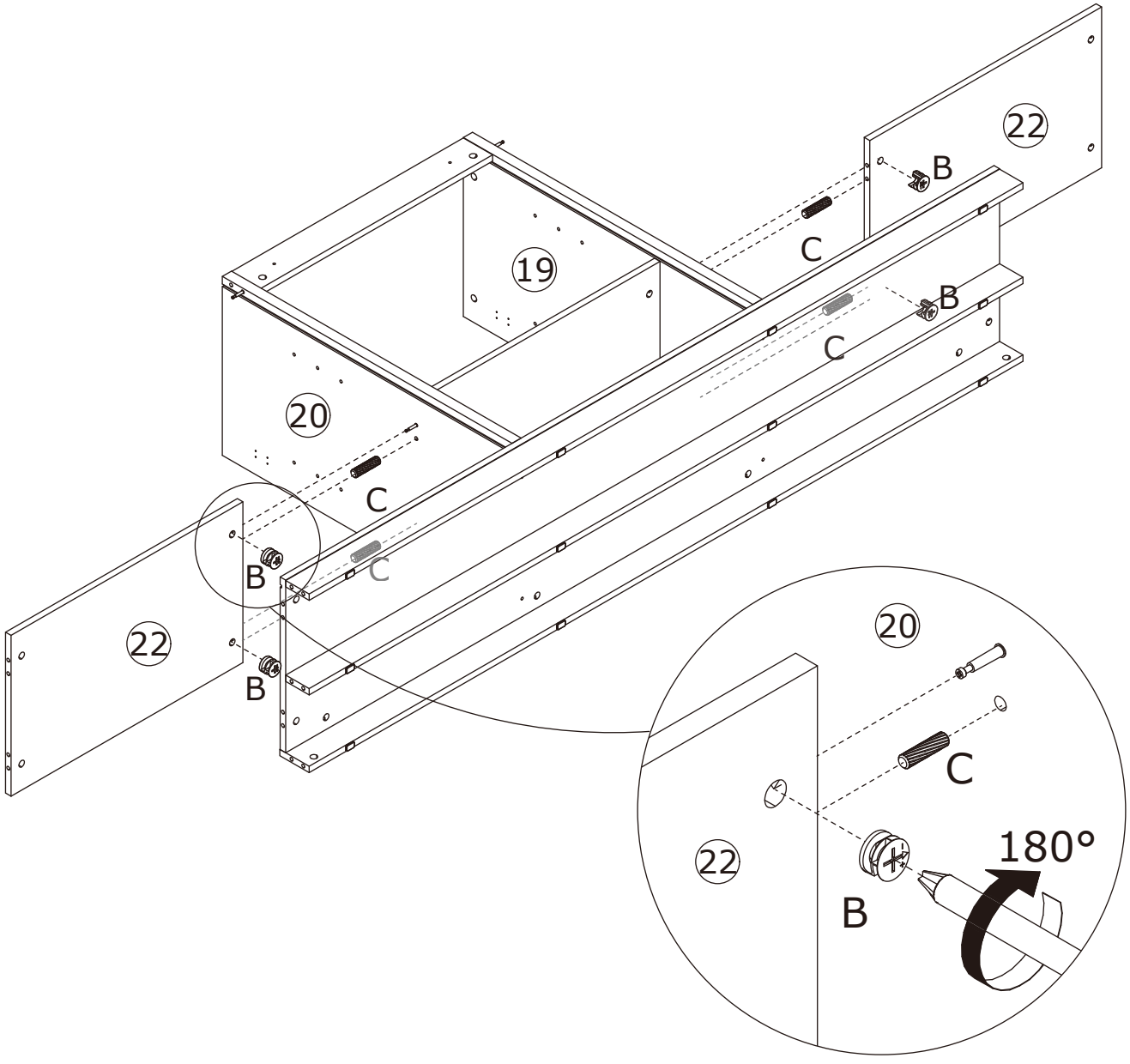

7

A x 16

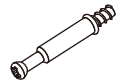

∅6 x 35 mm

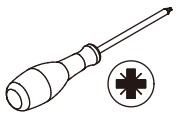

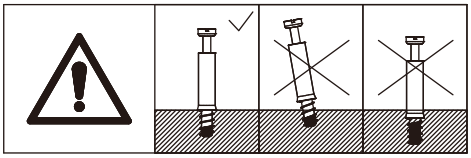

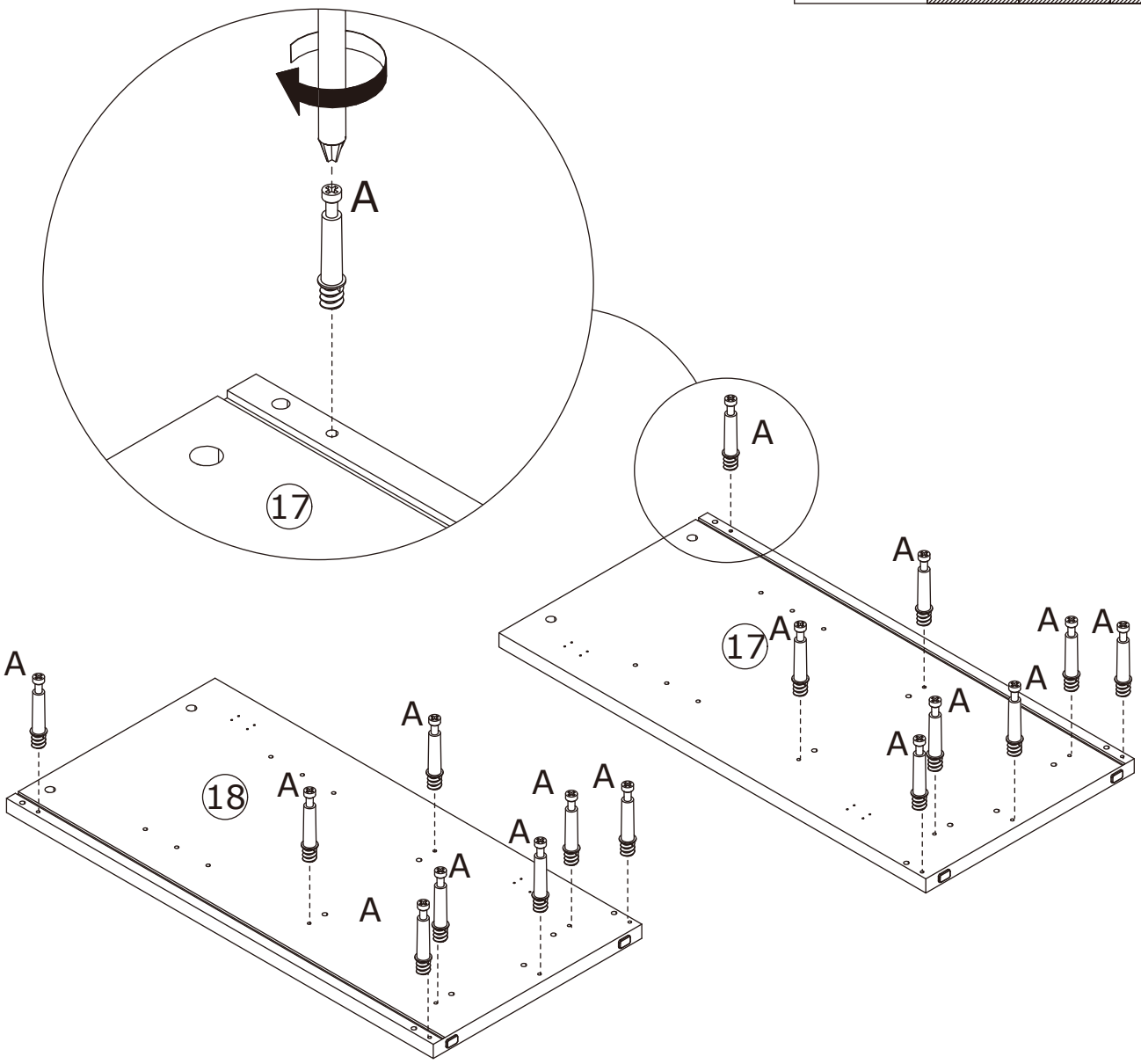

Screw eccentric rod (A) onto Panels 17 and 18.

8

B x 18	C x 18	
		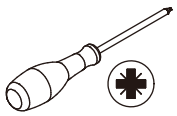
∅15 x 9.6 mm	∅7.8 x 30 mm	

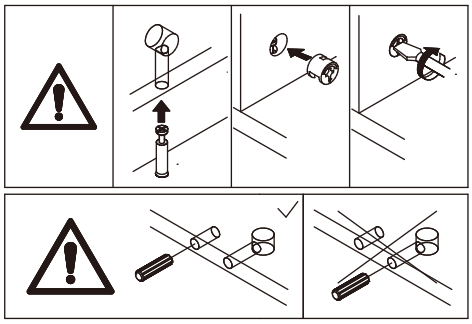

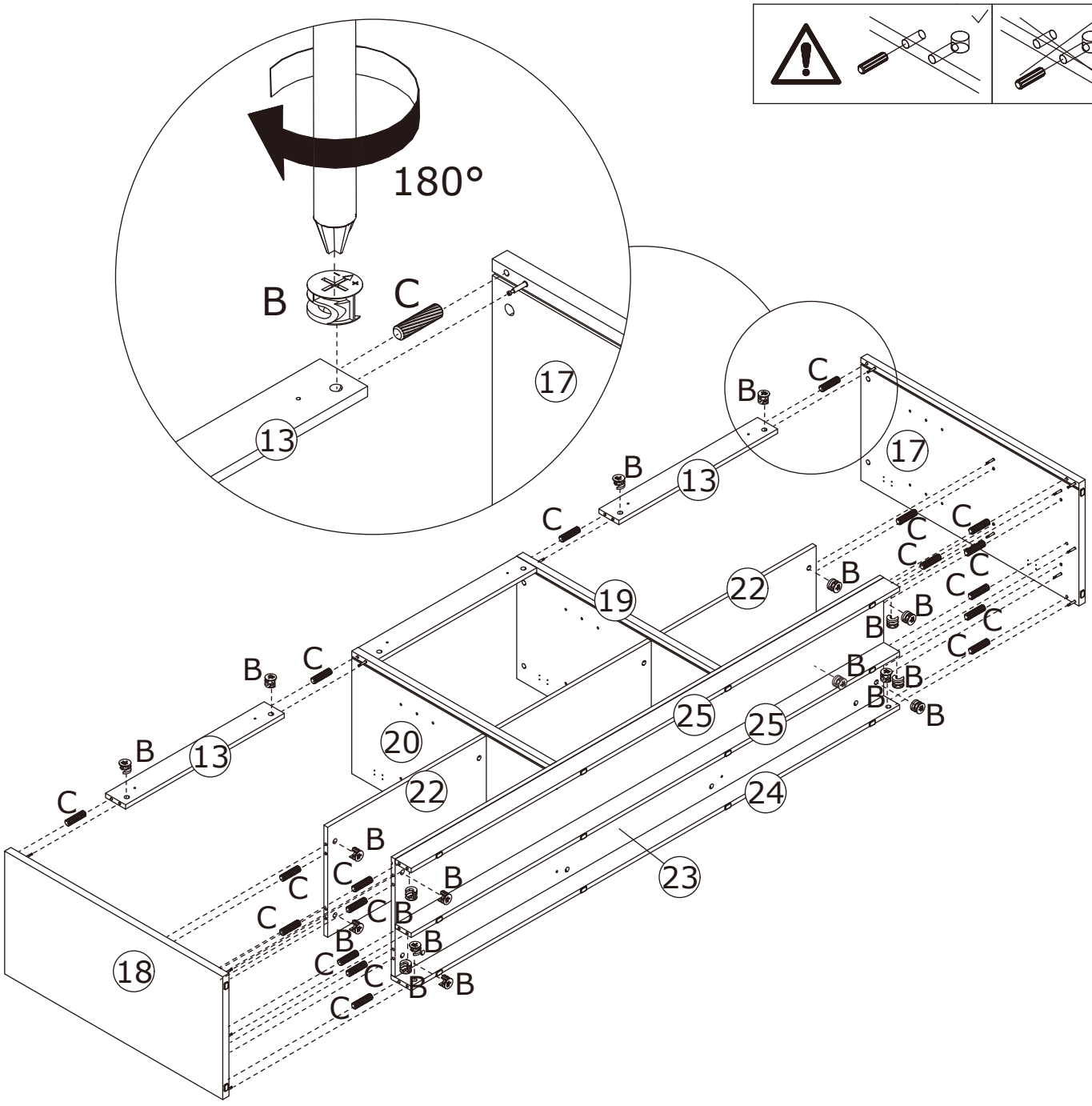

First connect Panel 13 to Panels 19 and 20 using dowel pin (C), then tighten by turning cam lock (B) clockwise.

Note: Someone needs to hold Panel 13.

Then connect Panels 17 and 18 to the combined unit using dowel pin (C), then tighten by turning cam lock (B) clockwise.

9

Insert Panel 15 along the available slots.

***Pay attention to the orientation of the holes.**

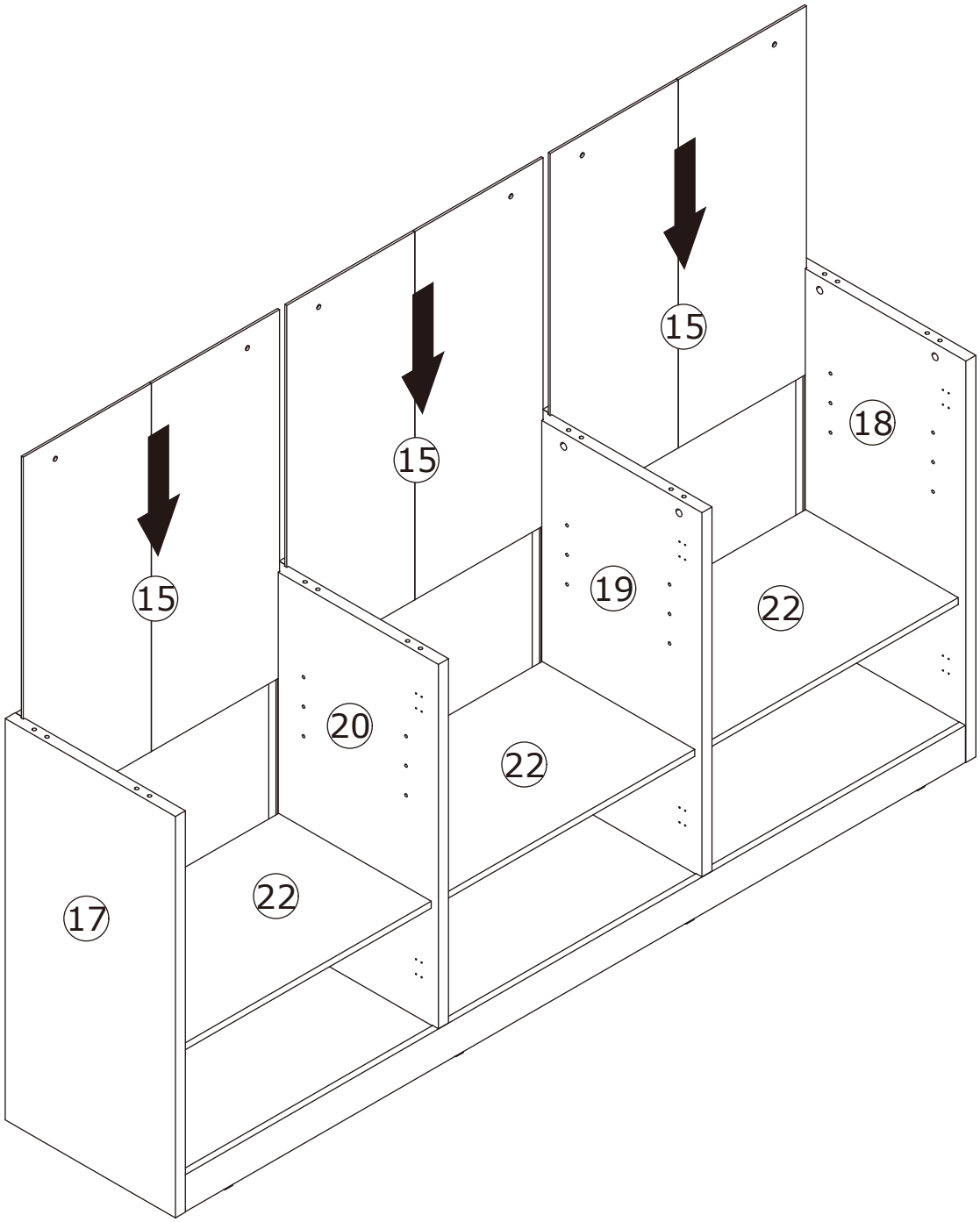

10

A x 12	X x 4	Y x 12	
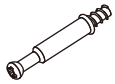			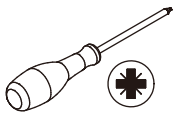
∅6 x 35 mm	300 mm	∅3.5 x 12 mm	

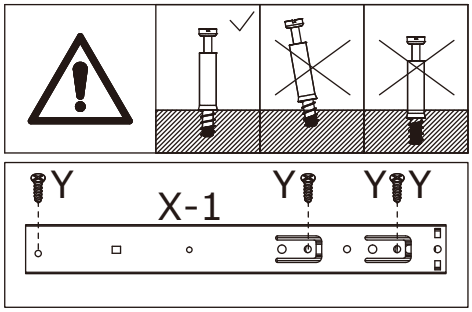

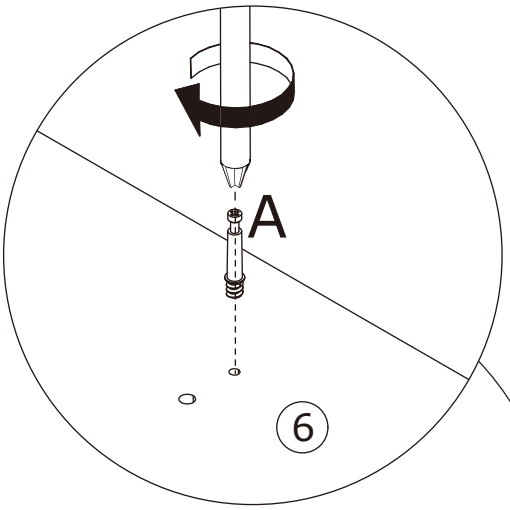

Screw eccentric rod (A) onto Panels 5 and 6.
Secure slide rail (X-1) to Panels 5 and 6 using screw (Y).

Note: After installing slide rails (X-1), retract the rails by pressing the buttons on the rear of the slides as shown in the diagram.

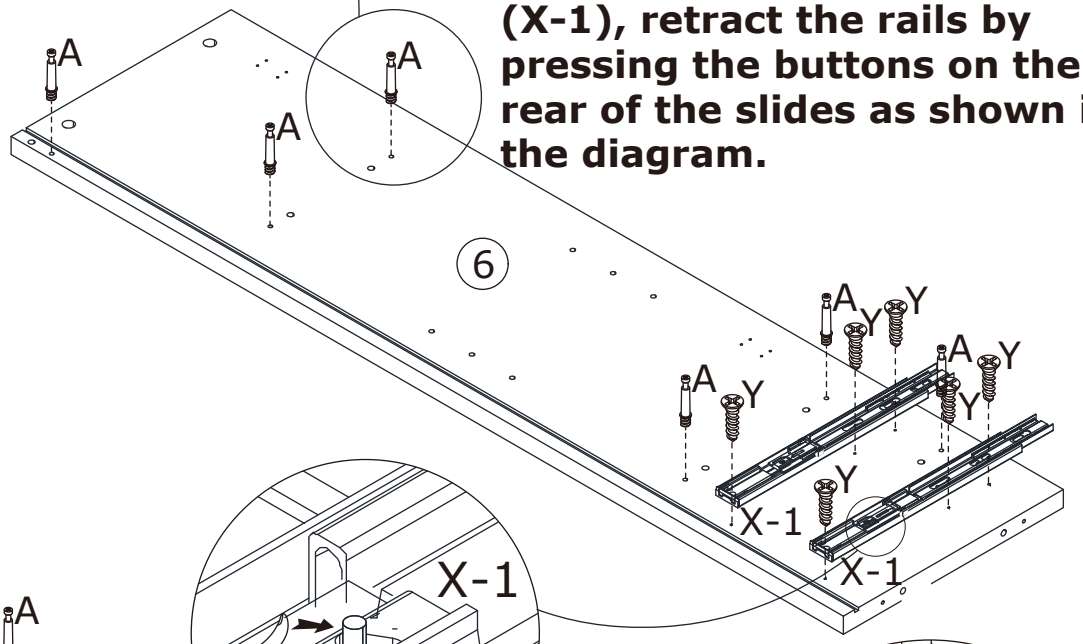

11

B x 6	C x 6	Z x 2	
∅15 x 9.6 mm	∅7.8 x 30 mm		

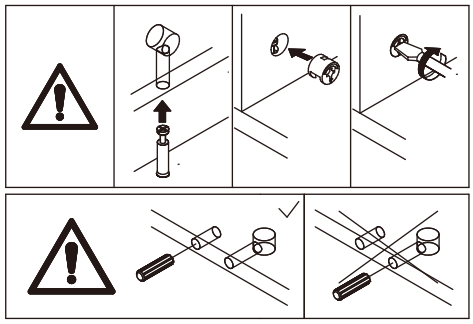

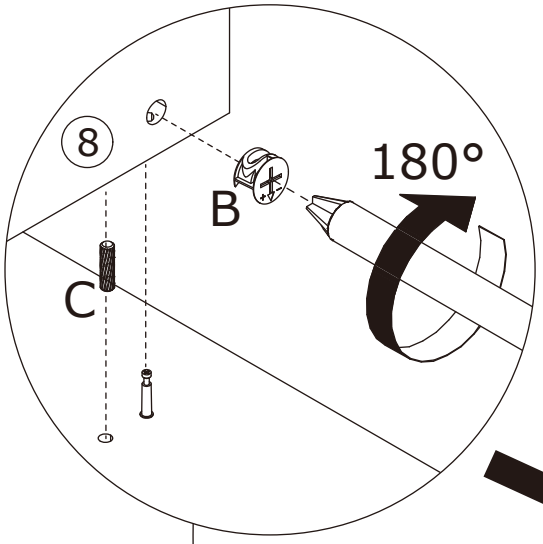

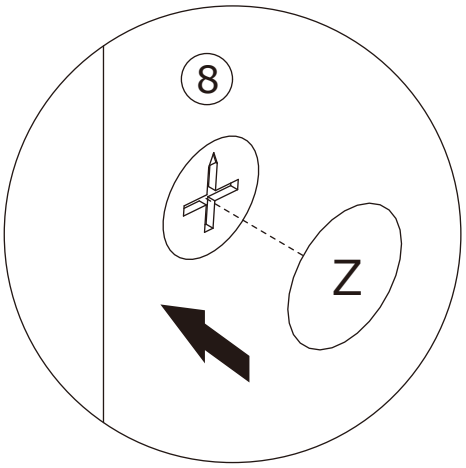

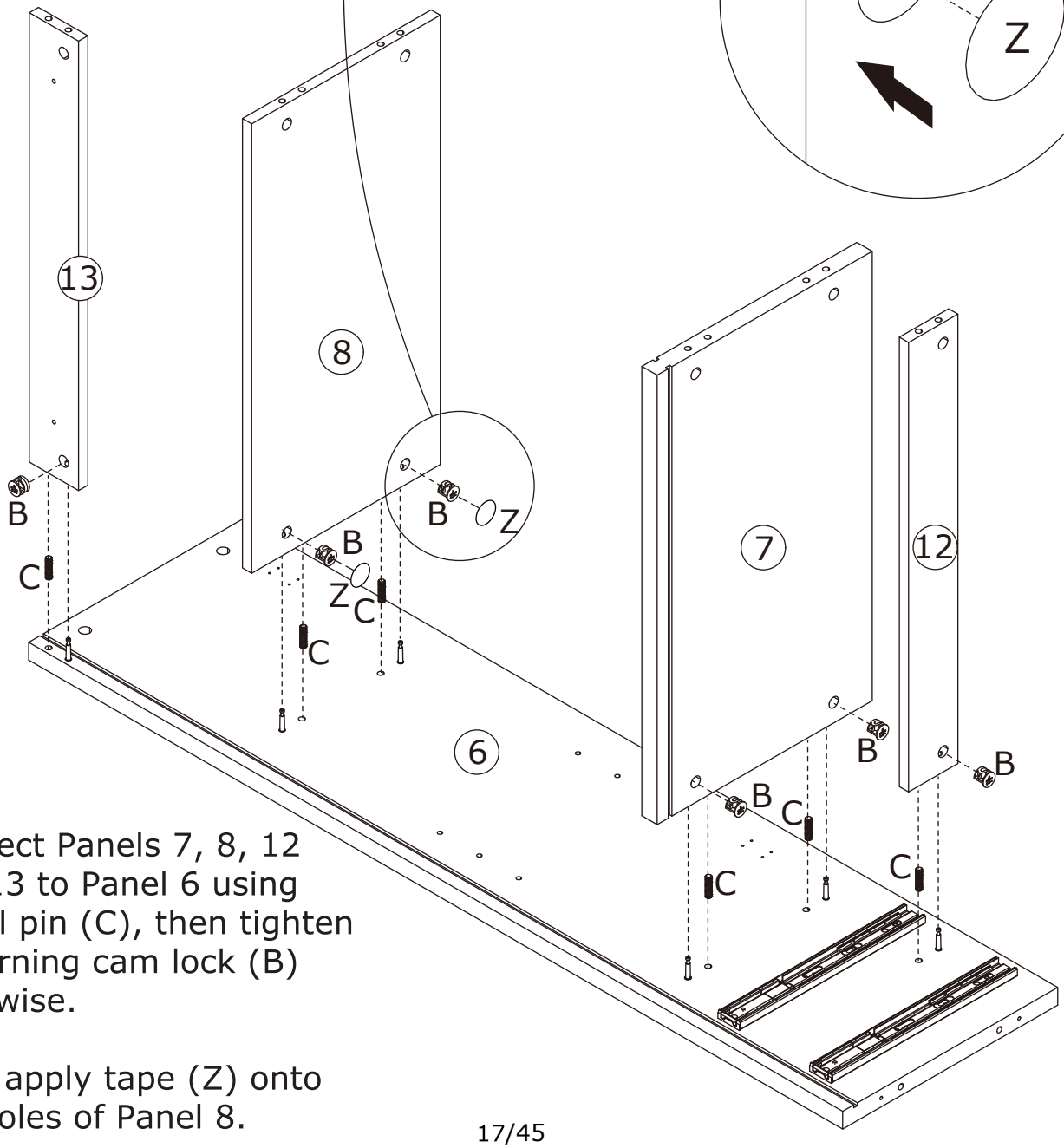

Connect Panels 7, 8, 12 and 13 to Panel 6 using dowel pin (C), then tighten by turning cam lock (B) clockwise.

Then apply tape (Z) onto the holes of Panel 8.

12

B x 6	C x 6	Z x 2	
			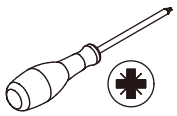
∅15 x 9.6 mm	∅7.8 x 30 mm		

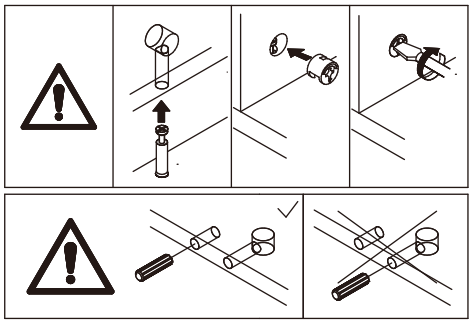

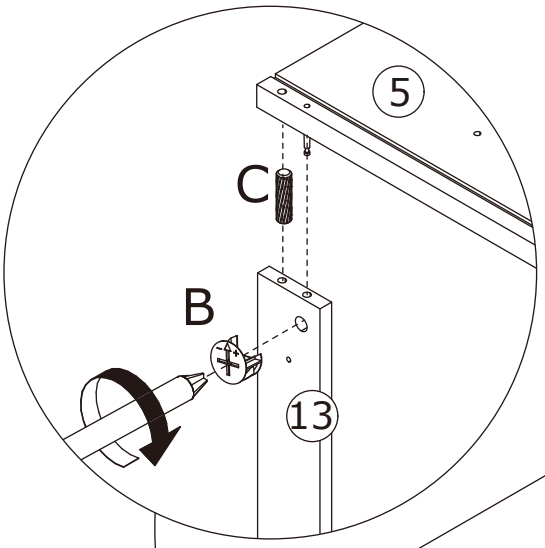

Connect Panels 7, 8, 12 and 13 to Panel 5 using dowel pin (C), then tighten by turning cam lock (B) clockwise.

Then apply tape (Z) onto the holes of Panel 8.

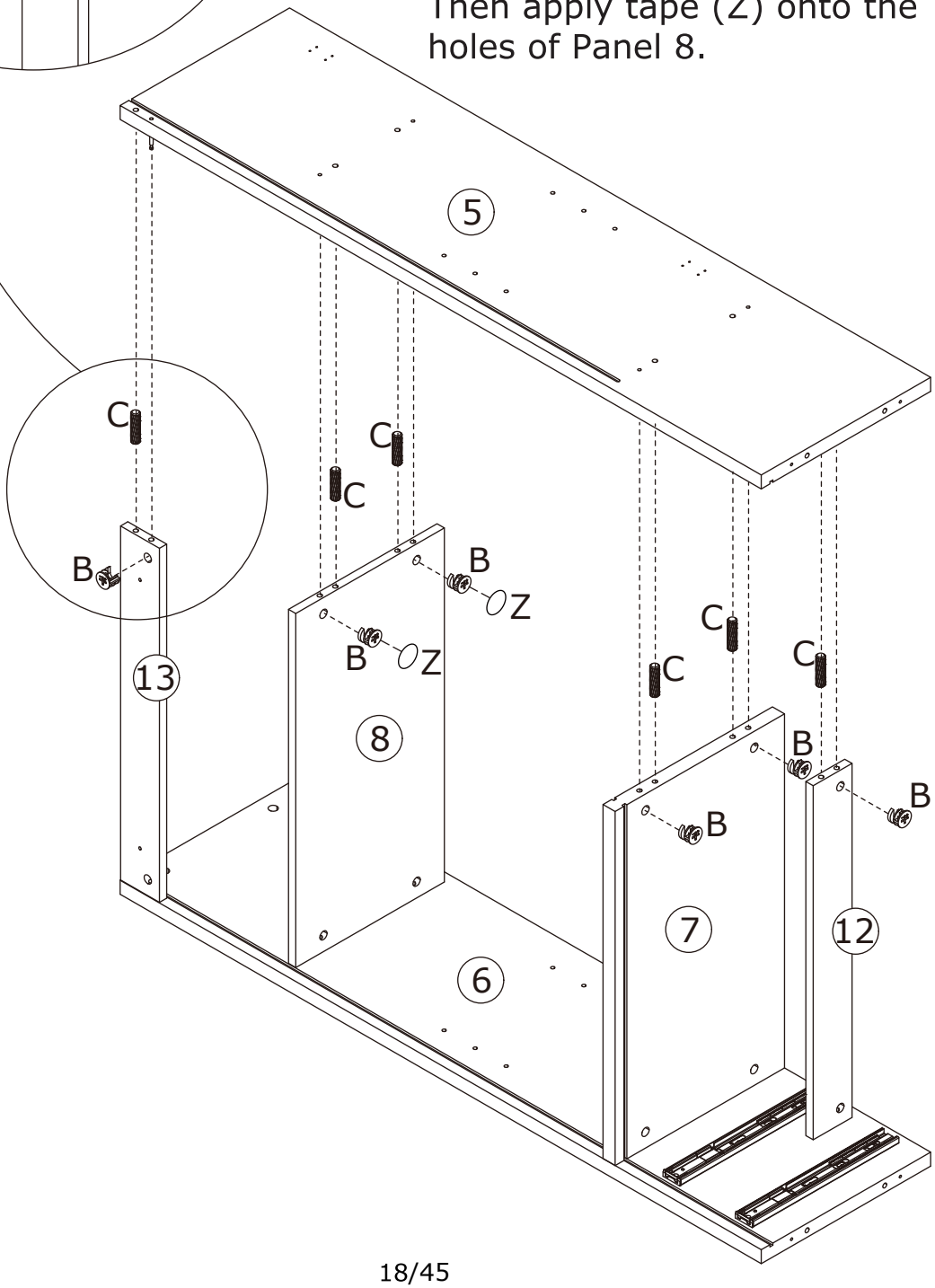

13

A x 10

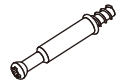

∅6 x 35 mm

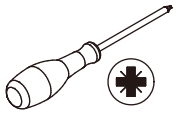

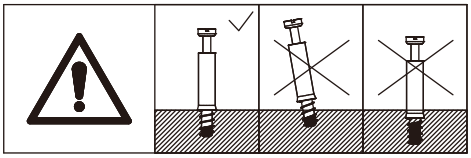

Screw eccentric rod (A) onto Panels 5 and 6.

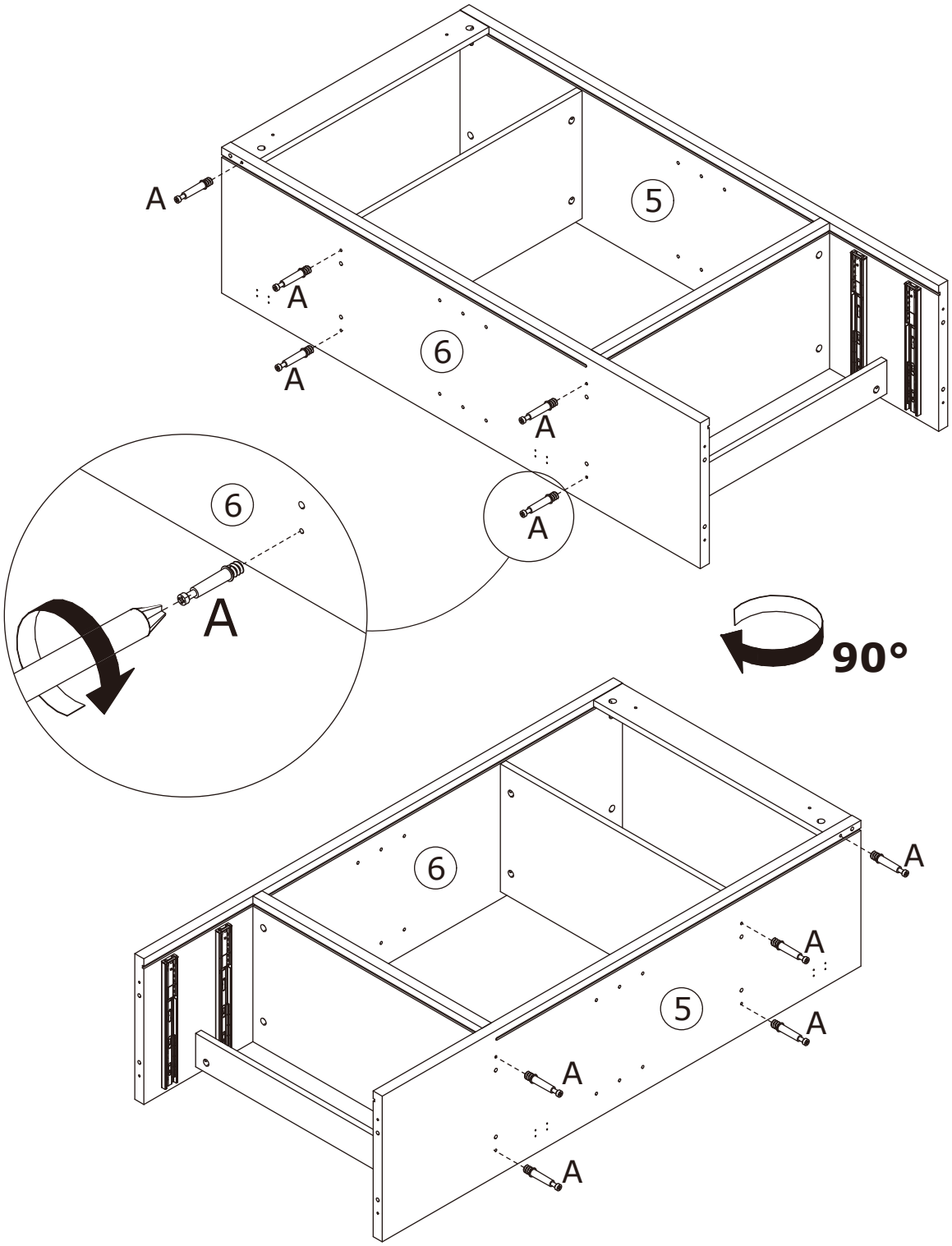

14

B x 4	C x 4	Z x 4	
			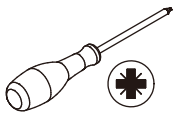
∅15 x 9.6 mm	∅7.8 x 30 mm		

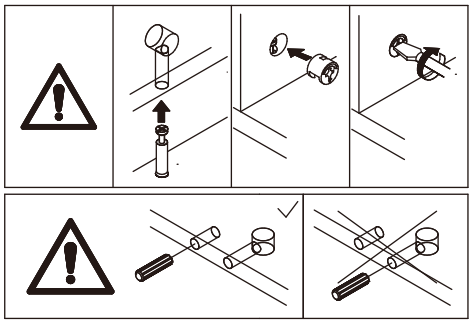

Connect Panel 8 to Panels 5 and 6 using dowel pin (C), then tighten by turning cam lock (B) clockwise.
Then apply tape (Z) onto the holes of Panel 8.

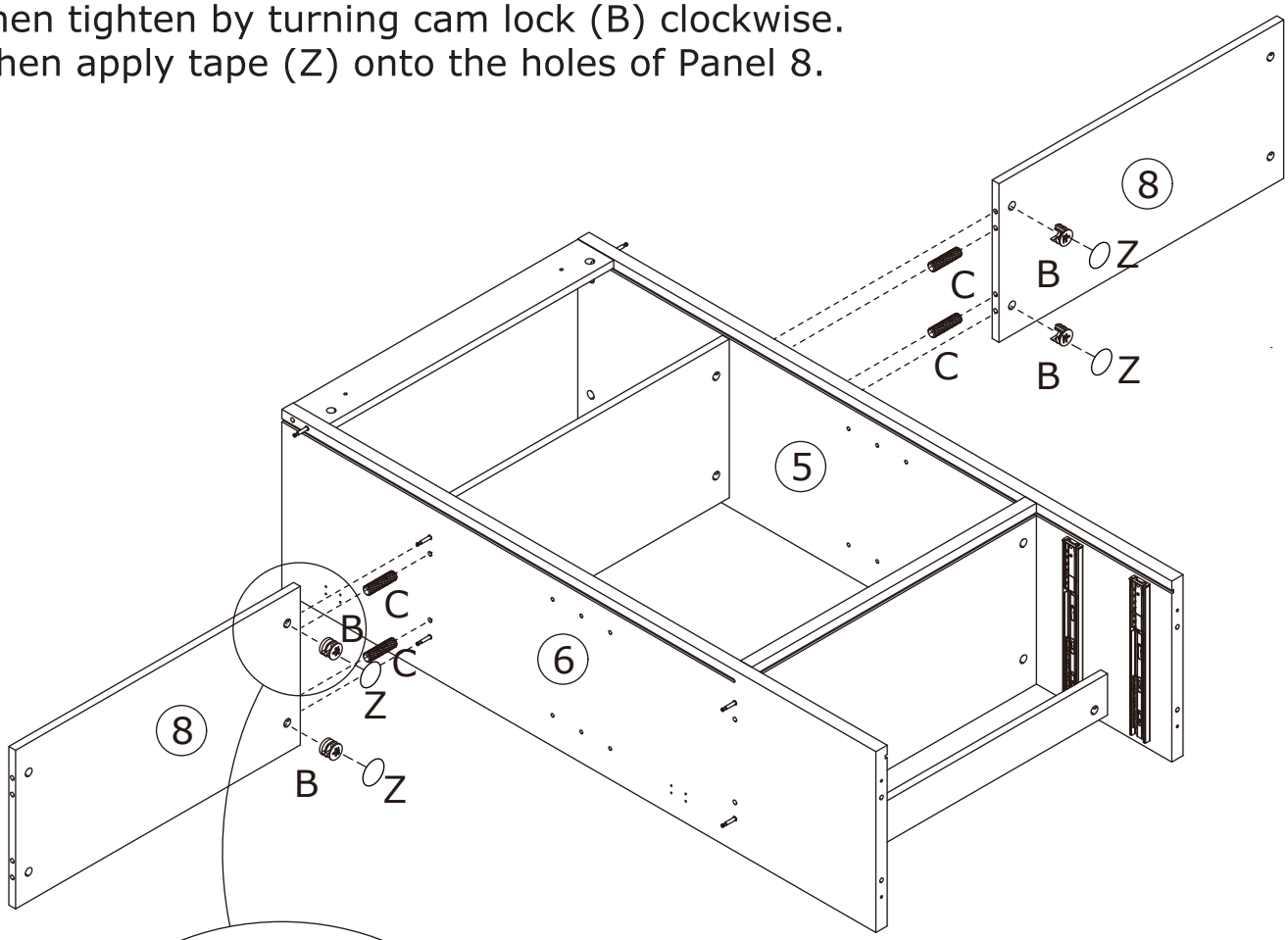

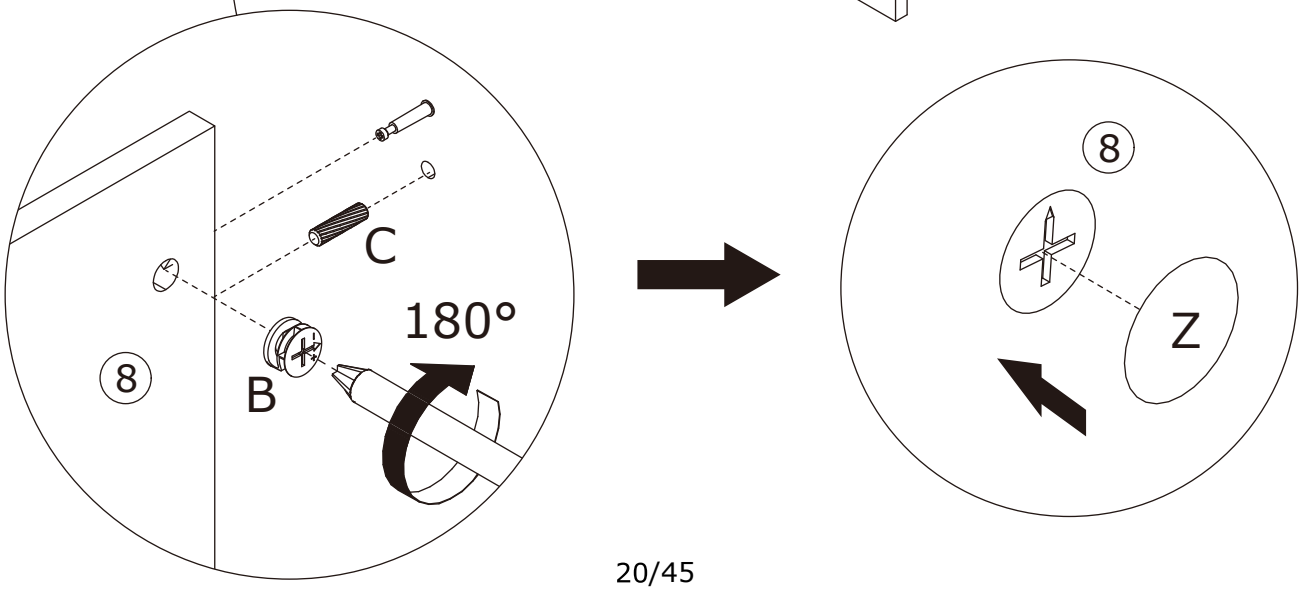

15

A x 6

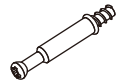

∅6 x 35 mm

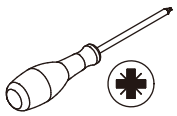

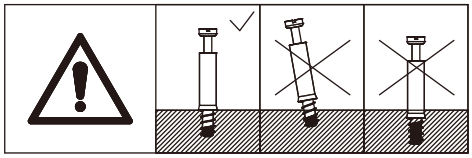

Screw eccentric rod (A) onto Panels 2 and 3.

16

C x 4	E x 4	
	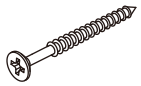	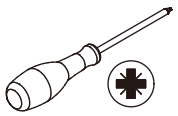
∅7.8 x 30 mm	∅5 x 50 mm	

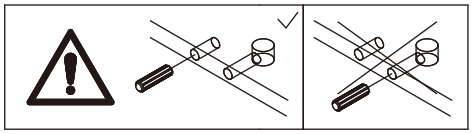

Connect Panels 10 and 11 to Panels 2 and 3 using dowel pin (C), then secure them with screw (E).

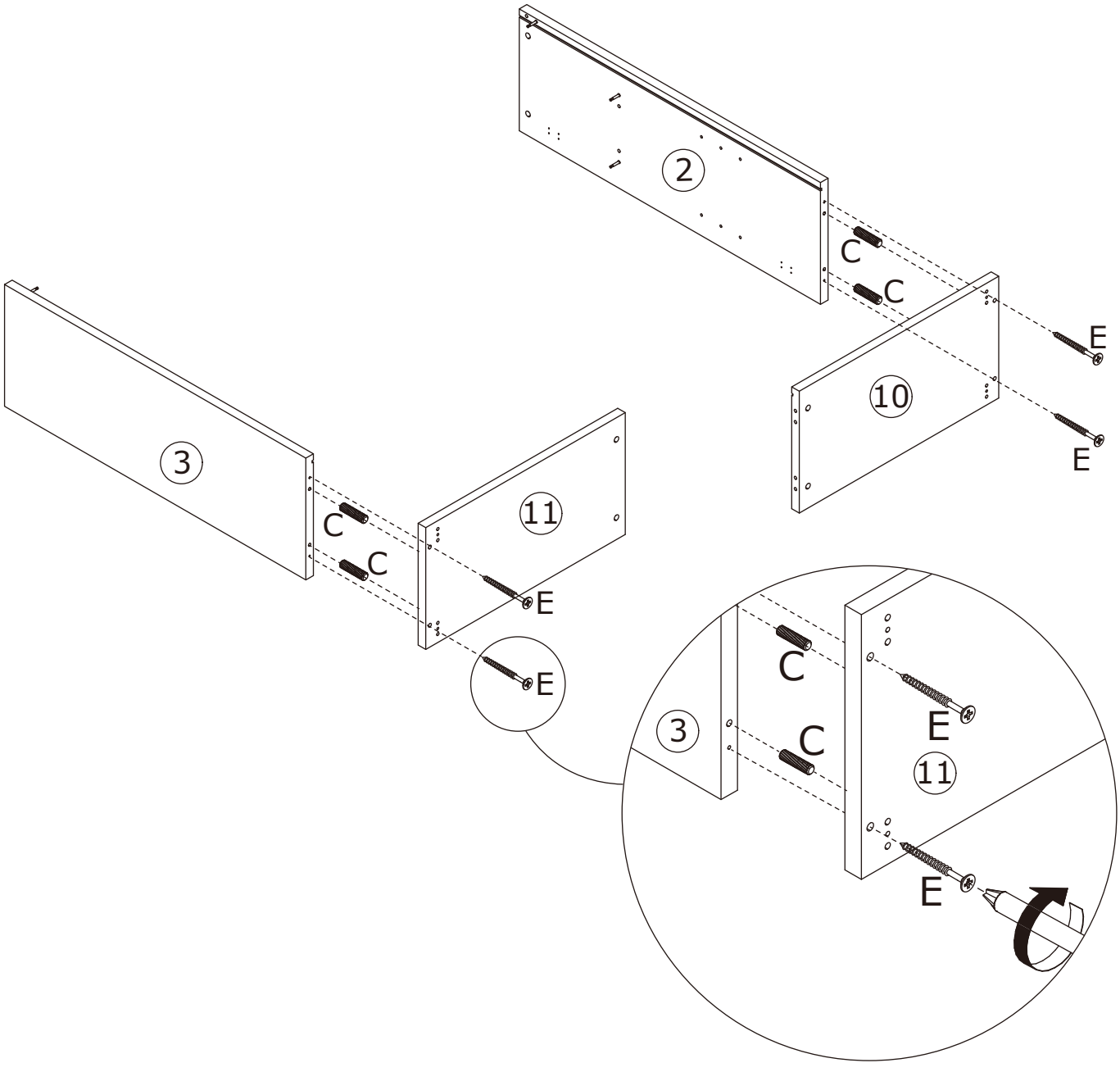

17

B x 12	C x 12	Z x 8	
			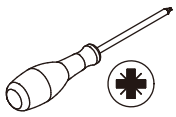
∅15 x 9.6 mm	∅7.8 x 30 mm		

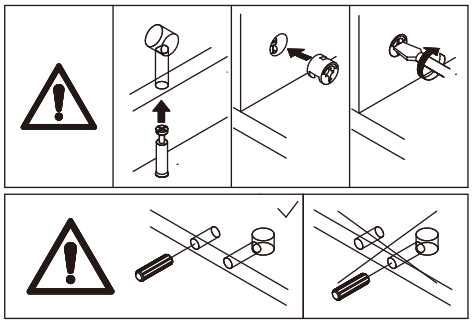

First connect Panel 13 to Panels 5 and 6 using dowel pin (C), then tighten by turning cam lock (B) clockwise.

Note: Someone needs to hold Panel 13.

Then connect Panels 2, 10, 11 and 3 to the combined unit using dowel pin (C), then tighten by turning cam lock (B) clockwise.

Apply tape (Z) onto the holes of Panels 8, 10 and 11.

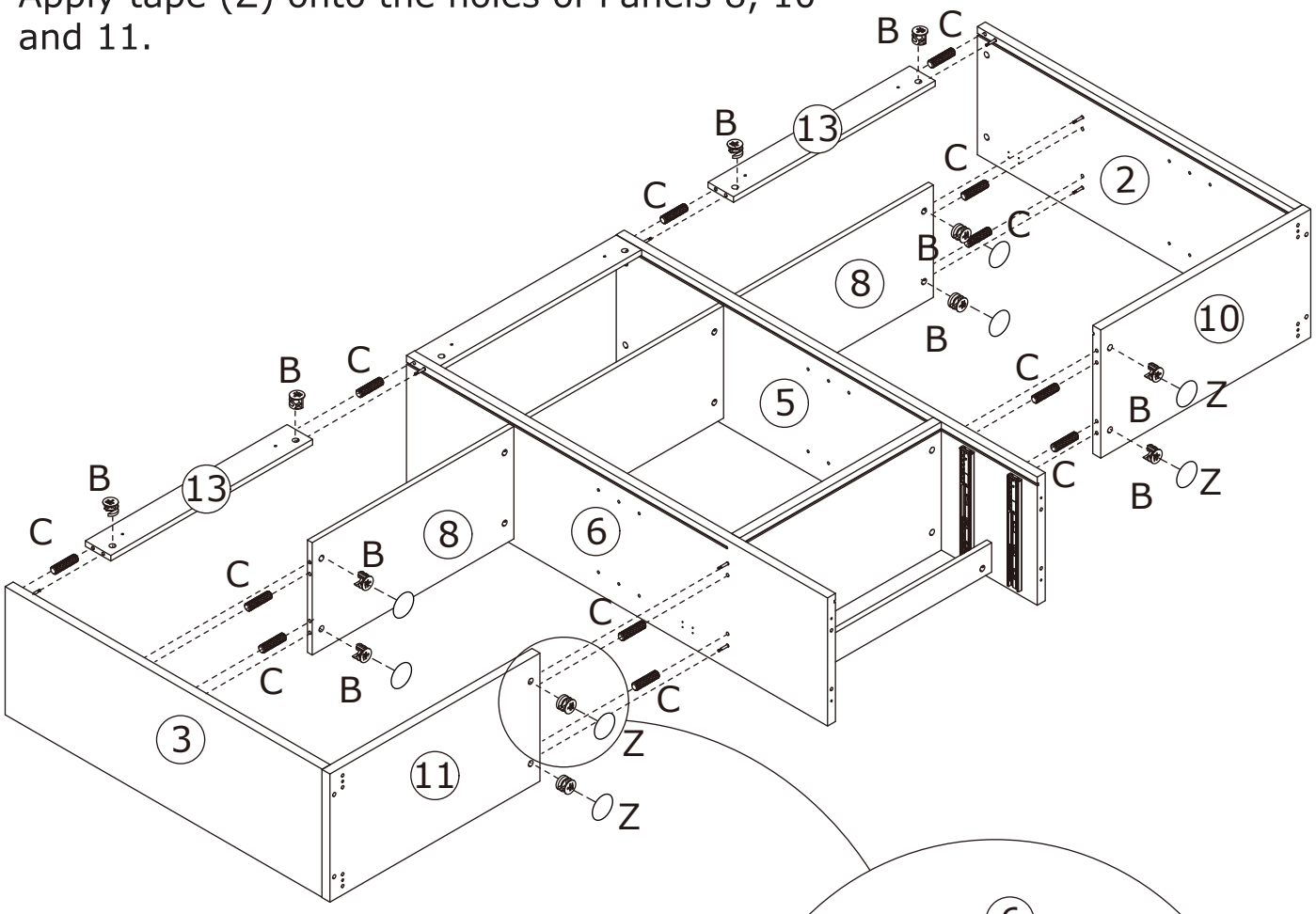

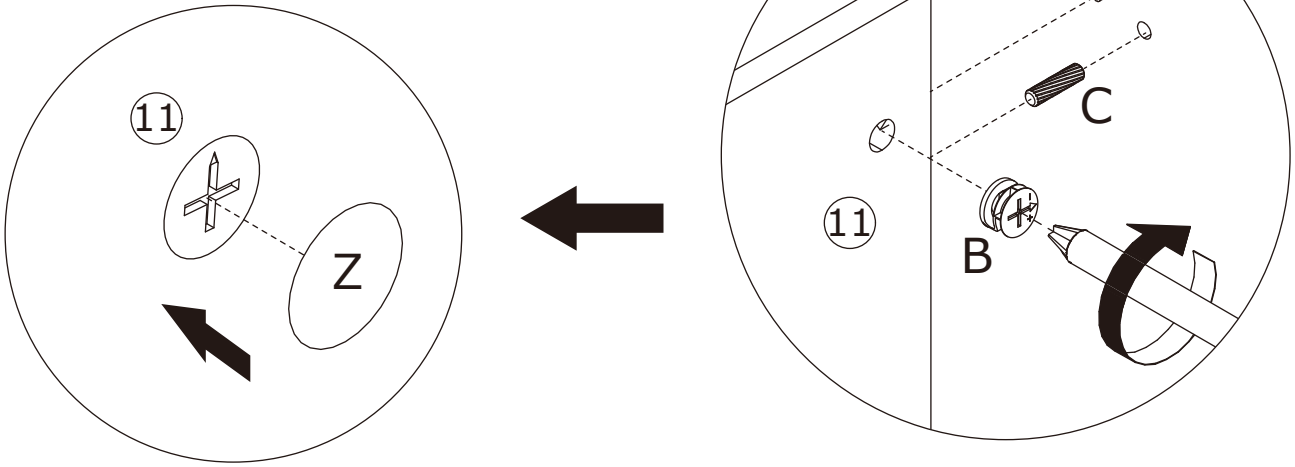

18

C x 8	E x 4	
	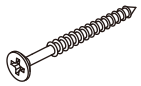	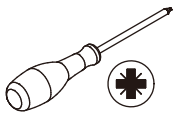
∅7.8 x 30 mm	∅5 x 50 mm	

Connect support post 28 to Panels 10 and 11 using dowel pin (C), then secure them with screw (E).
Insert Panel 16 along the available slots.

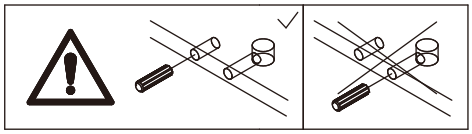

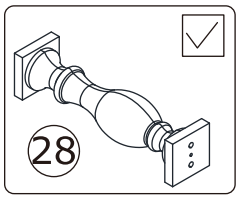

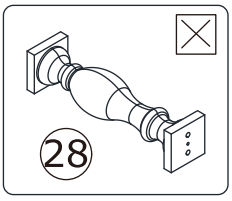

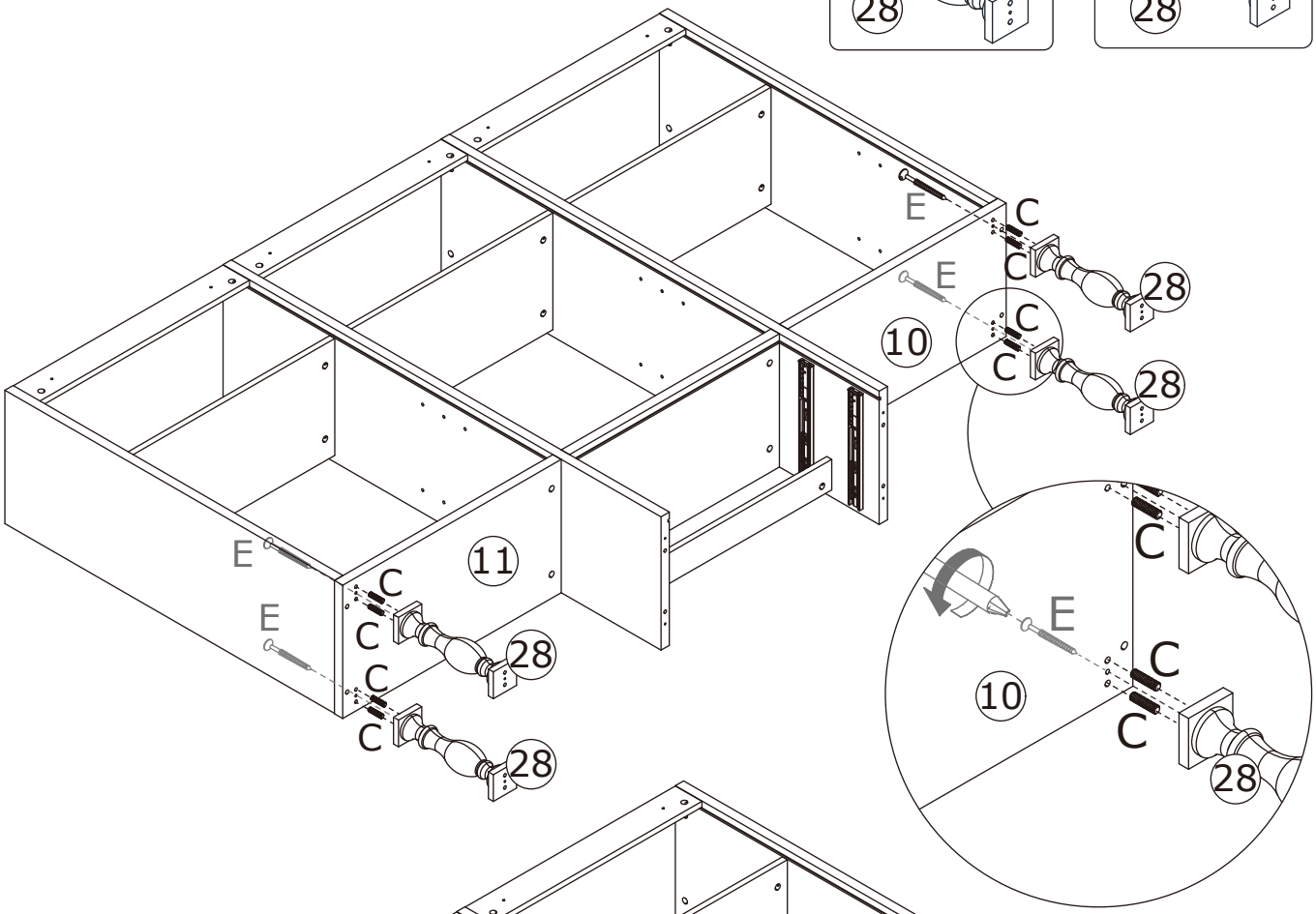

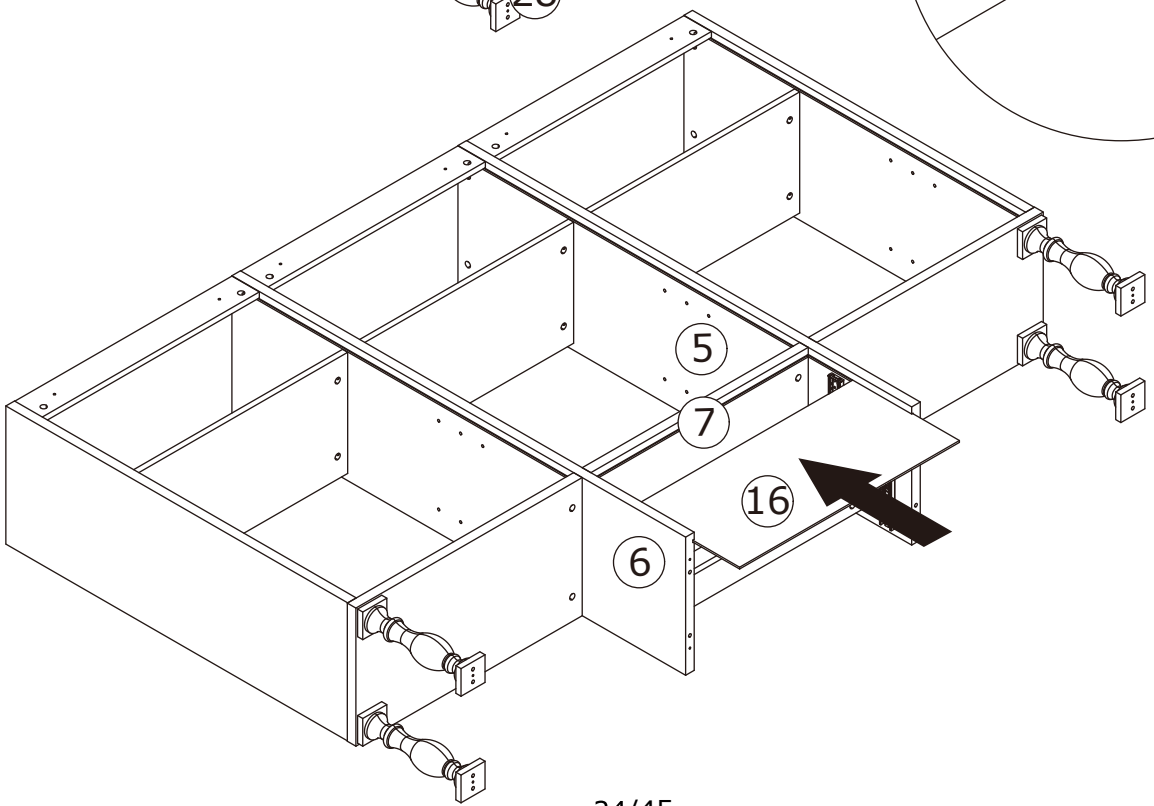

19

C x 12	E x 8	
	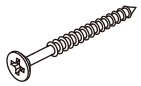	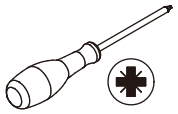
∅7.8 x 30 mm	∅5 x 50 mm	

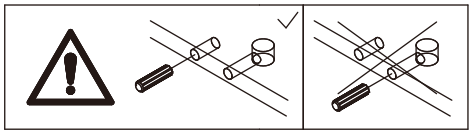

Connect Panel 4 to Panels 5, 6 and the support post 28 using dowel pin (C), then secure them with screw (E).

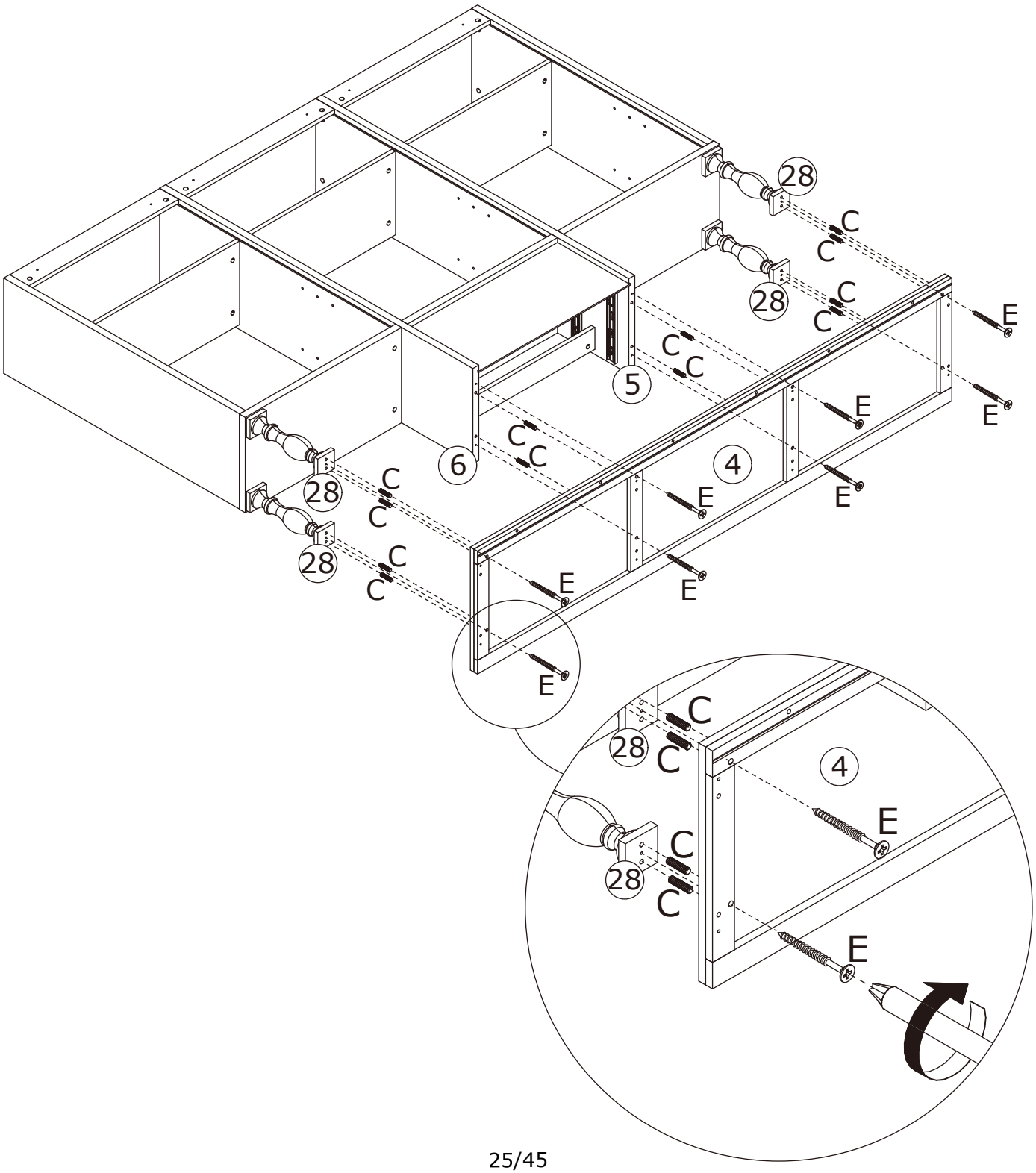

20

Insert Panel 14 along the available slots.

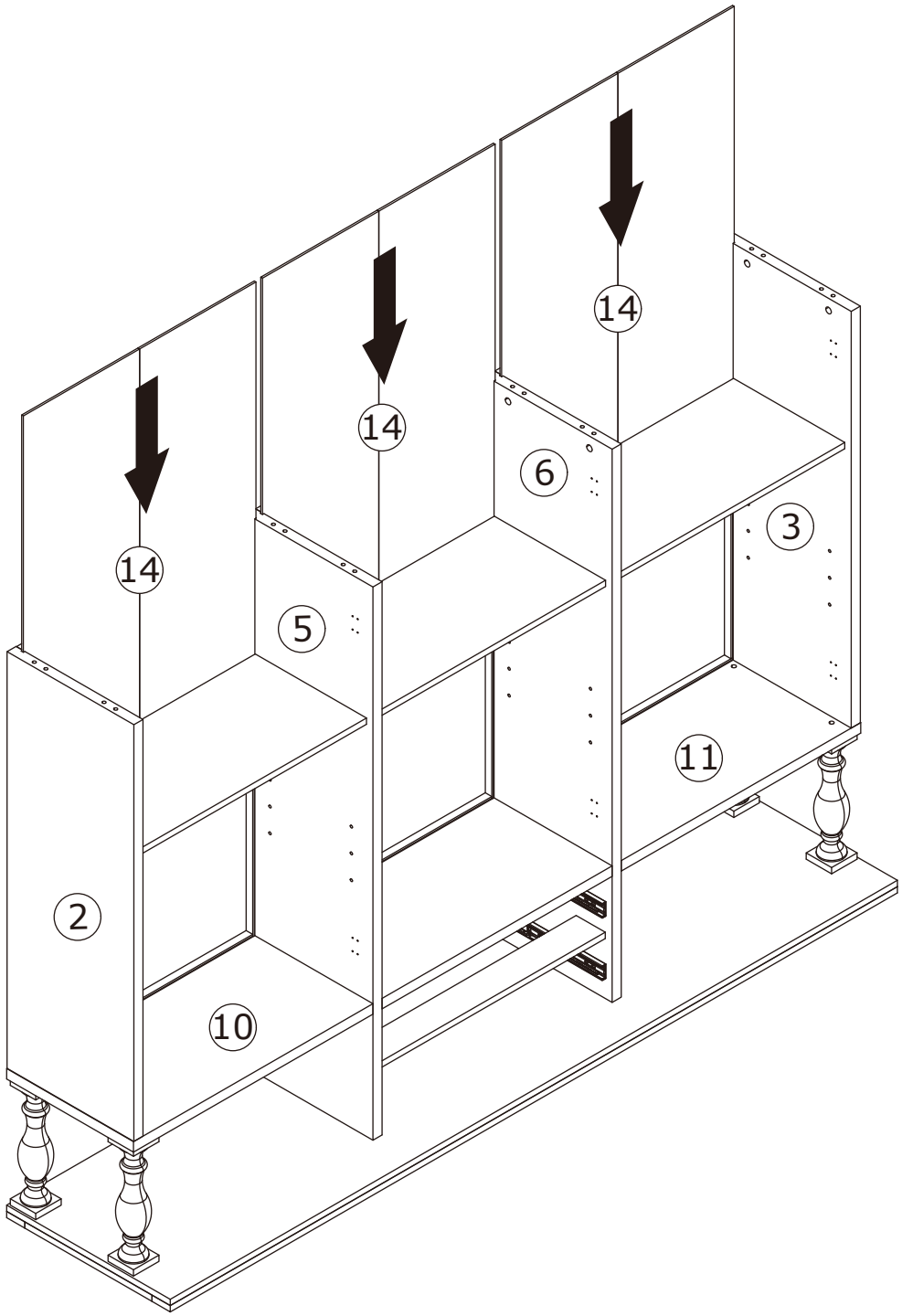

21

D x 3	H x 4	P x 4	T x 2	
				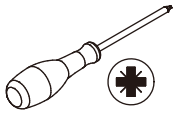
∅7.8 x 20 mm	∅4 x 30 mm	∅4 x 14 mm	∅20 x 39 mm	

Connect Panel 38 to Panel 35 using dowel pin (D), then secure with screw (H).

Note: Pay attention to the direction of the holes on Panel 38.

Secure bracket (T) to Panels 36 and 37 using screw (P).

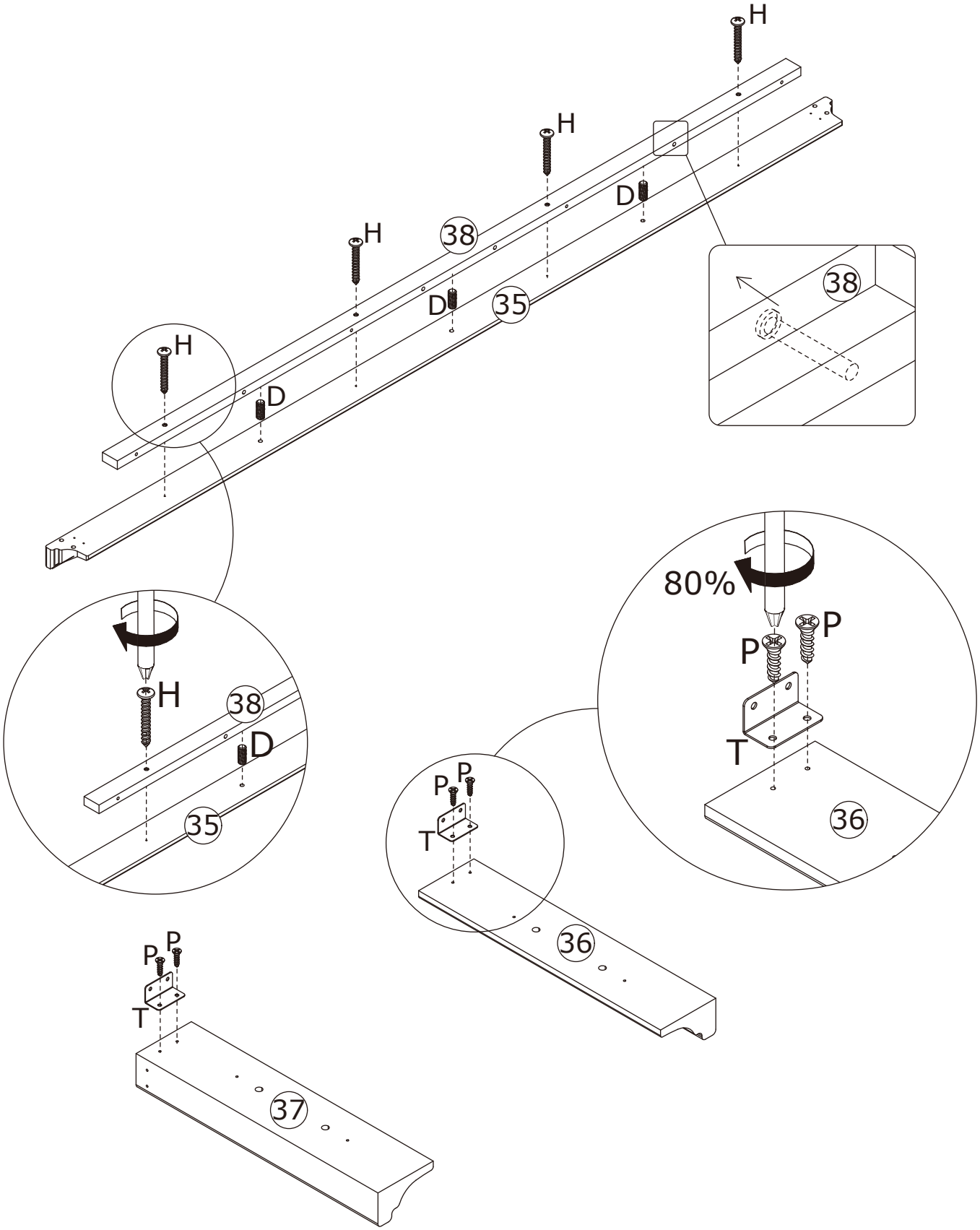

22

C x 4	D x 4	H x 4	P x 4	
				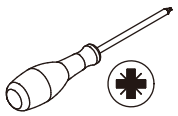
∅7.8 x 30 mm	∅7.8 x 20 mm	∅4 x 30 mm	∅4 x 14 mm	

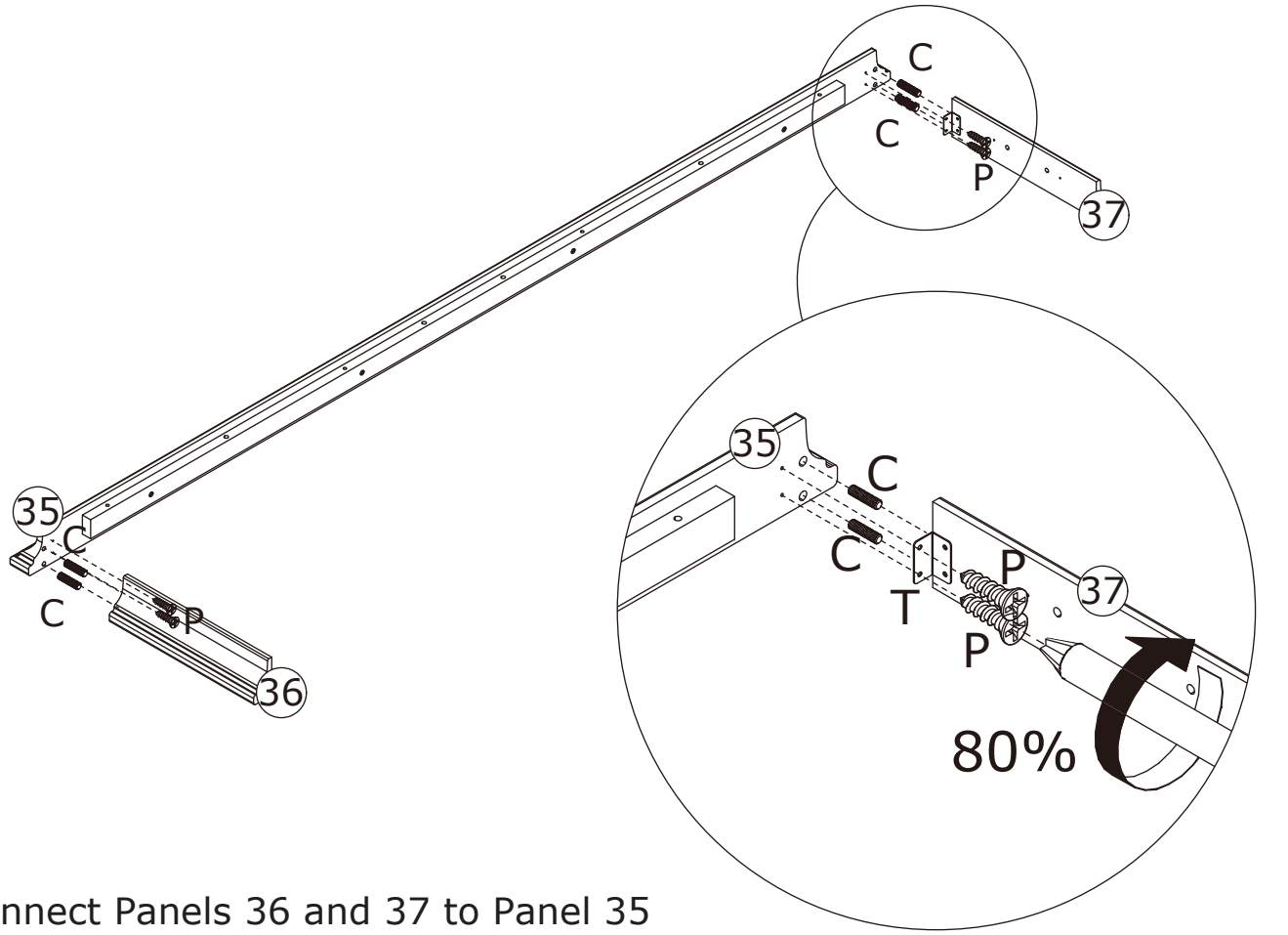

Connect Panels 36 and 37 to Panel 35 using dowel pin (C), then secure them through brackets with screw (P).

Secure Panel 39 to Panels 36 and 37 respectively using dowel pin (D), then secure with screw (H).

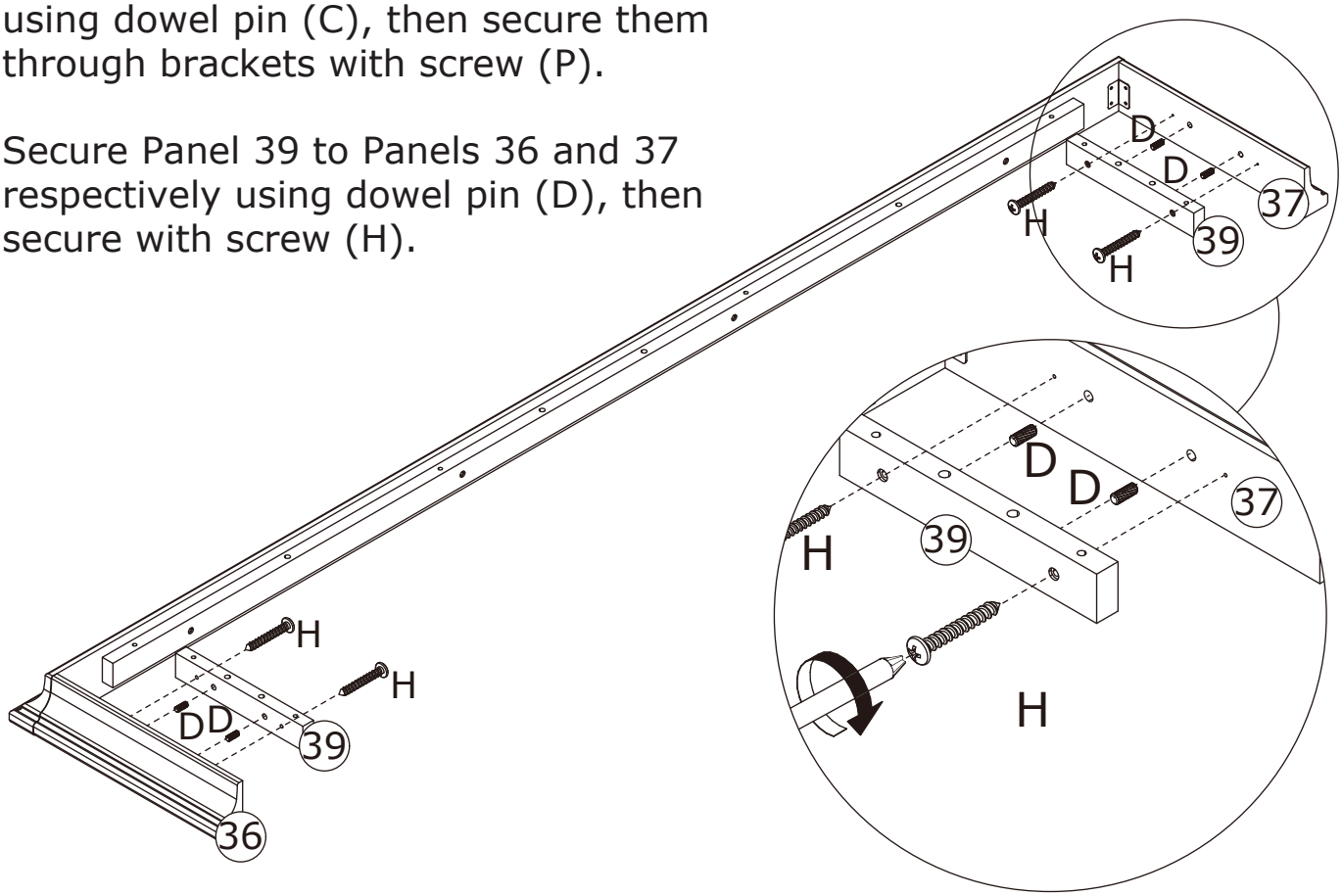

23

C x 8	E x 8	
	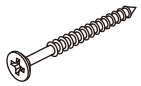	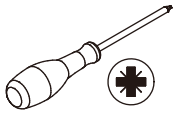
∅7.8 x 30 mm	∅5 x 50 mm	

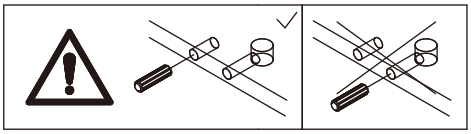

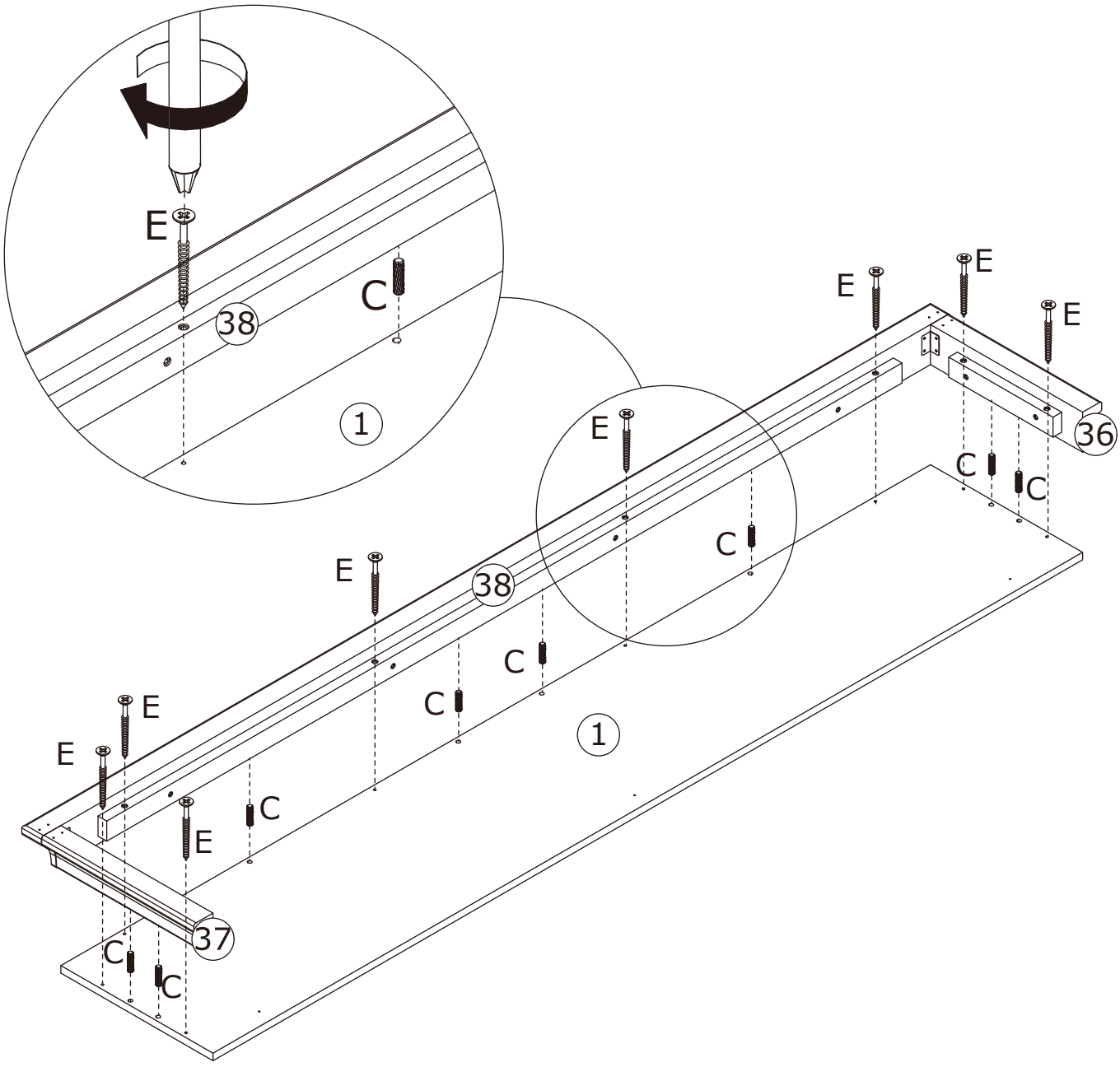

Connect Panels 36, 37 and 38 to Panel 1 using dowel pin (D), then secure with screw (E).

24

O x 2	P x 8	
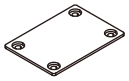		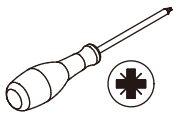
40 x 28 mm	∅4 x 14 mm	

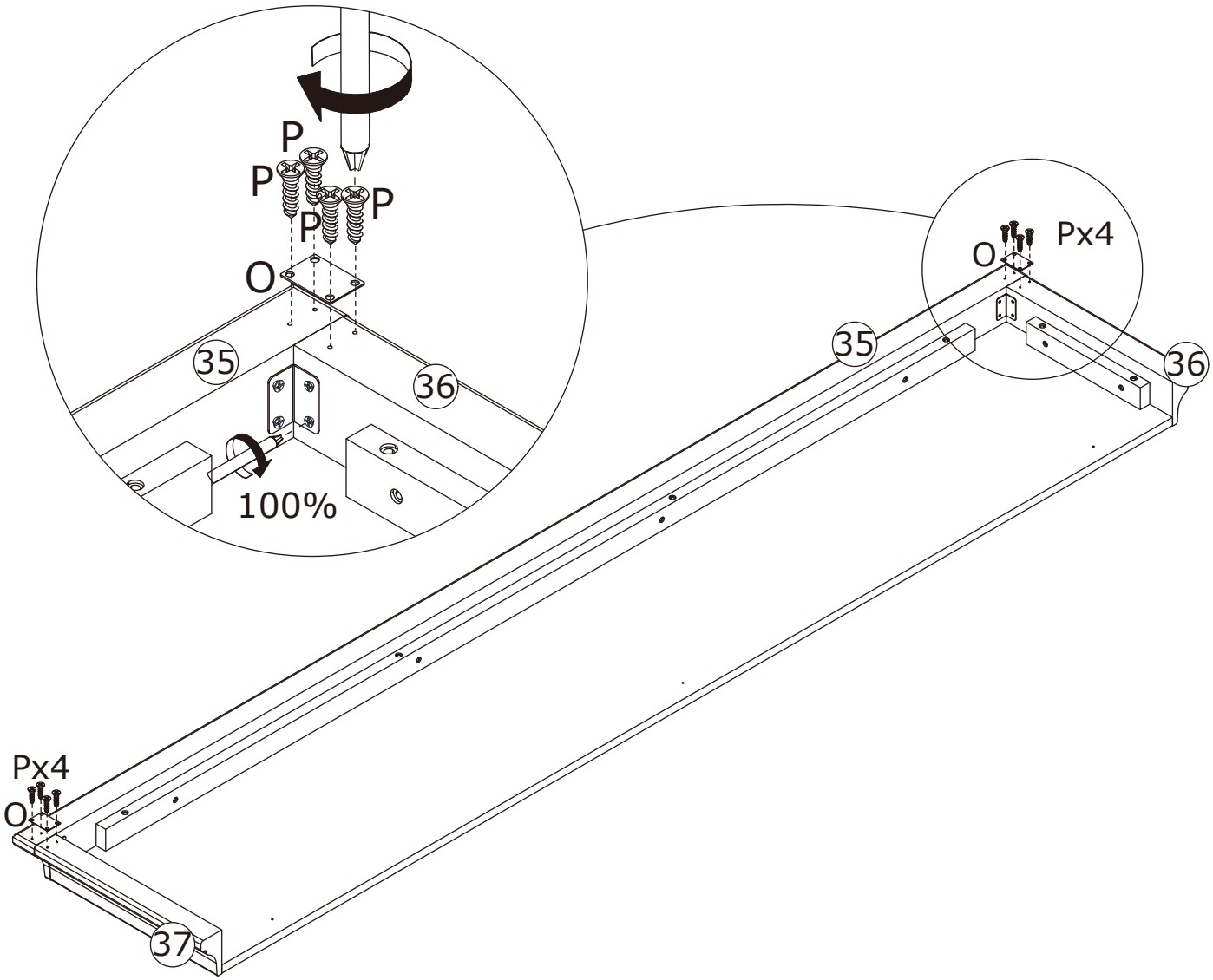

Secure iron plate (O) to Panels 36, 37 and 35 using screw (P).

25

A x 8	M x 3	
∅6 x 35 mm	26 x 17 mm	

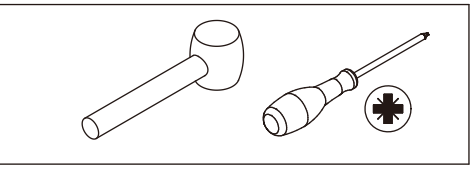

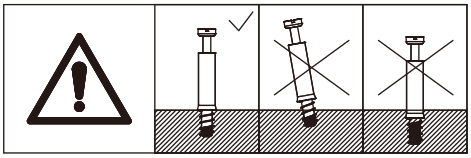

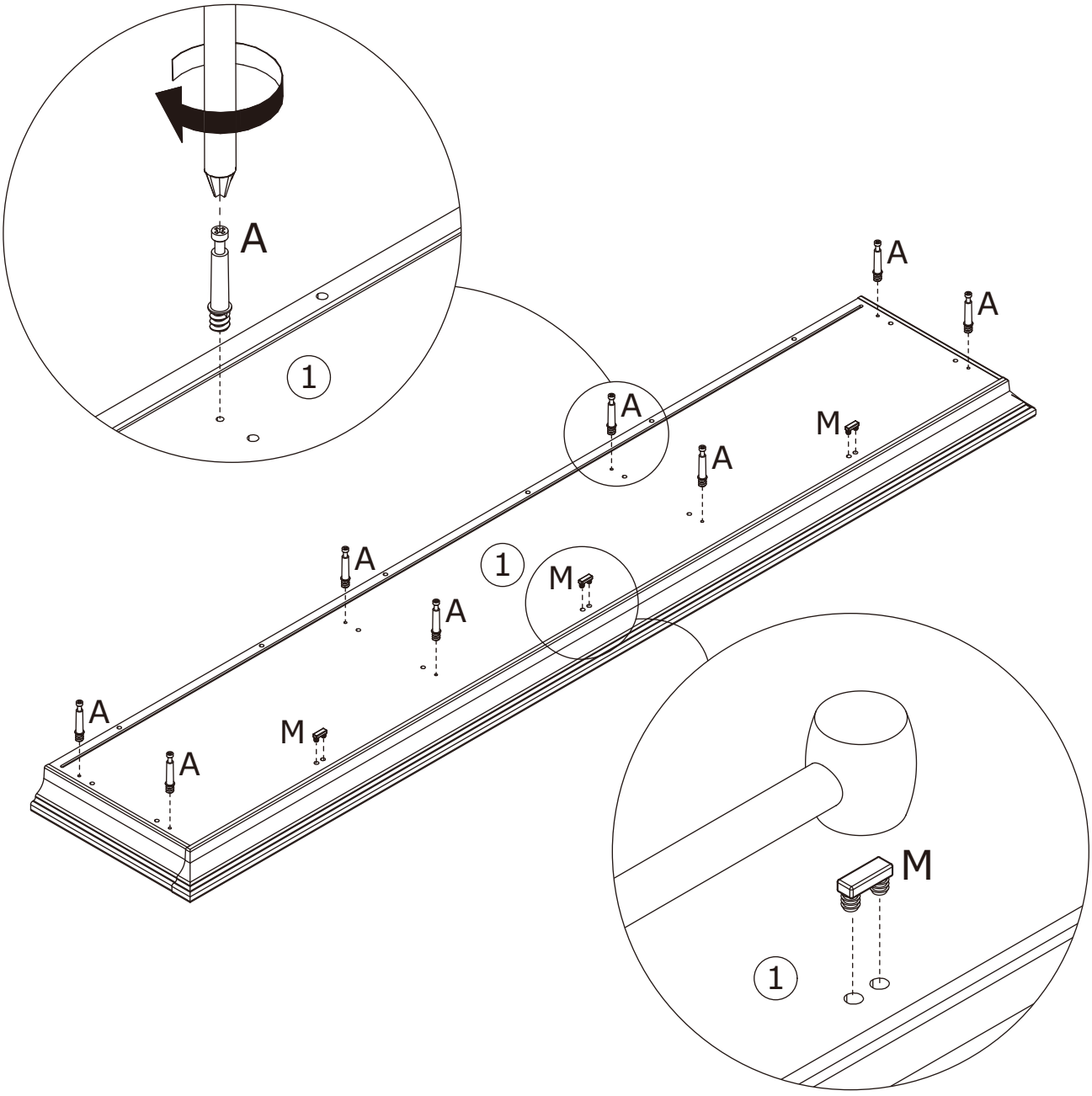

Screw eccentric rod (A) onto Panel 1.
Knock plug (M) into Panel 1 using a rubber mallet.

26

B x 8	C x 14	Z x 8	
∅15 x 9.6 mm	∅7.8 x 30 mm		

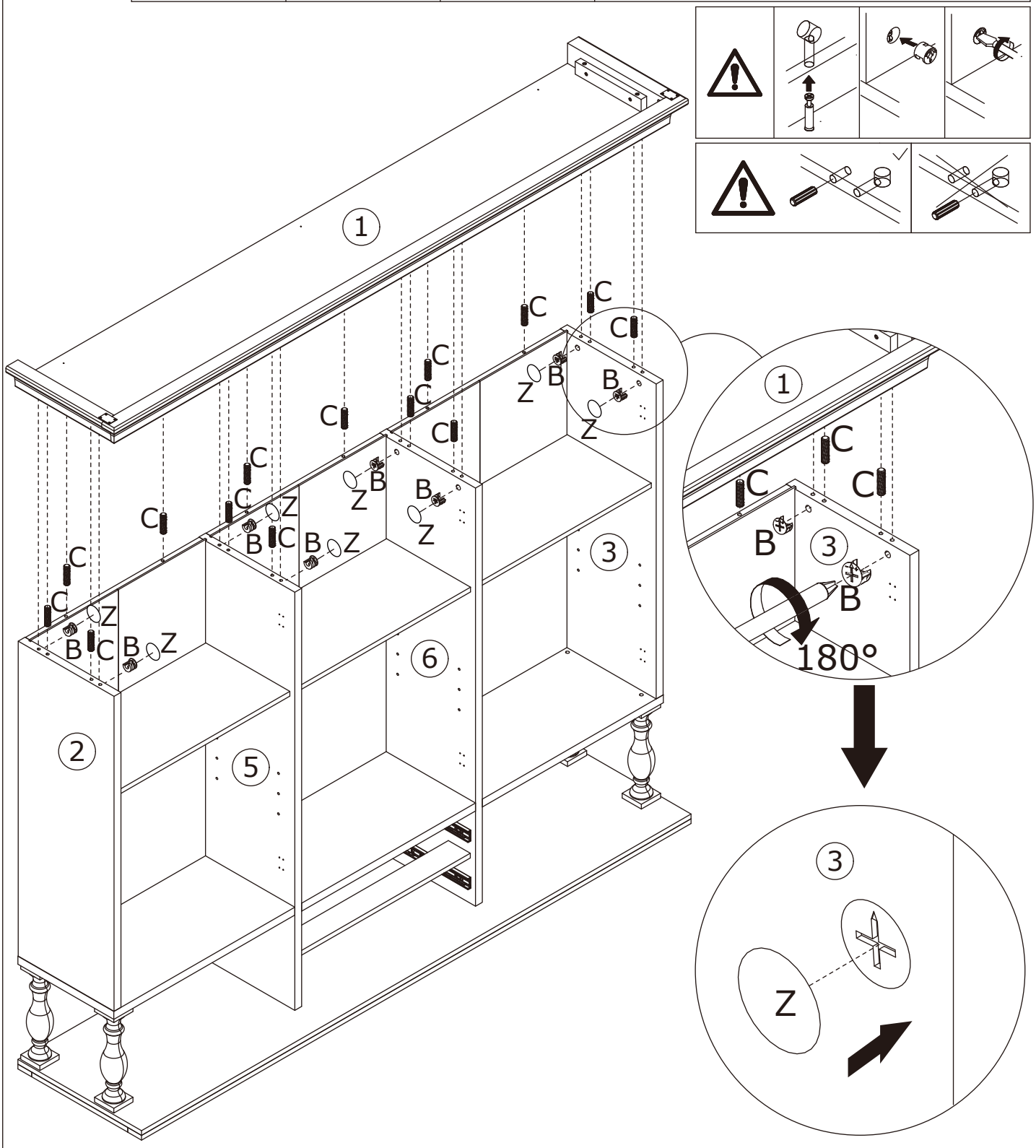

Connect Panel 1 to the combined unit using dowel pin (C), then tighten by turning cam lock (B) clockwise.
Apply tape (Z) onto the holes of Panels 2, 3, 5 and 6.

27

V x 34	W x 34	
		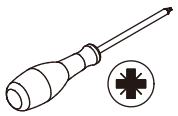
14 x 13 mm	∅3 x 16 mm	

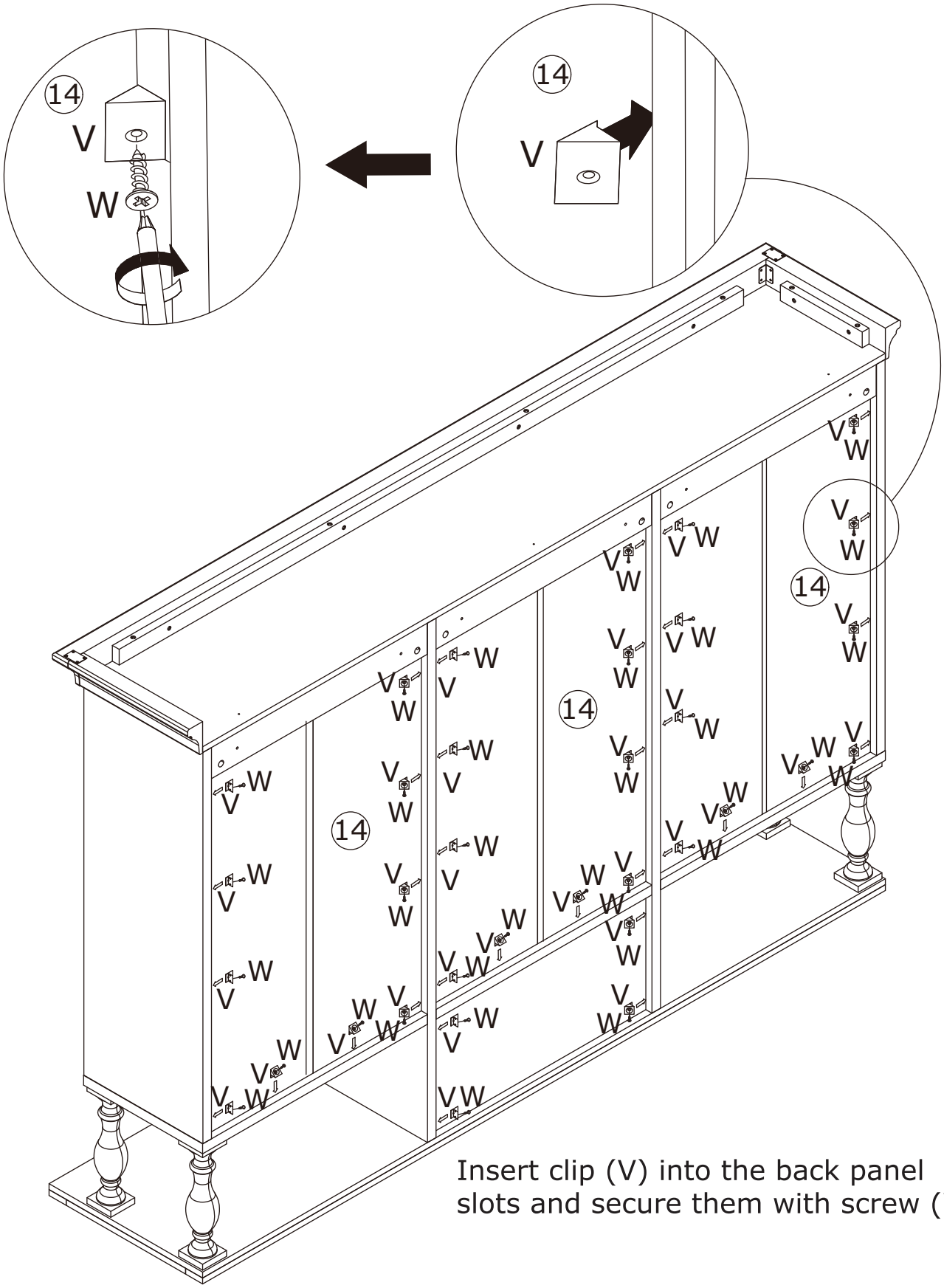

Insert clip (V) into the back panel slots and secure them with screw (W).

28

A x 8

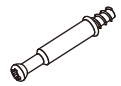

∅6 x 35 mm

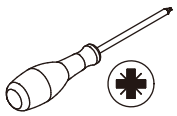

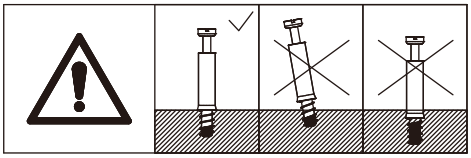

Screw eccentric rod (A) onto Panel 4.

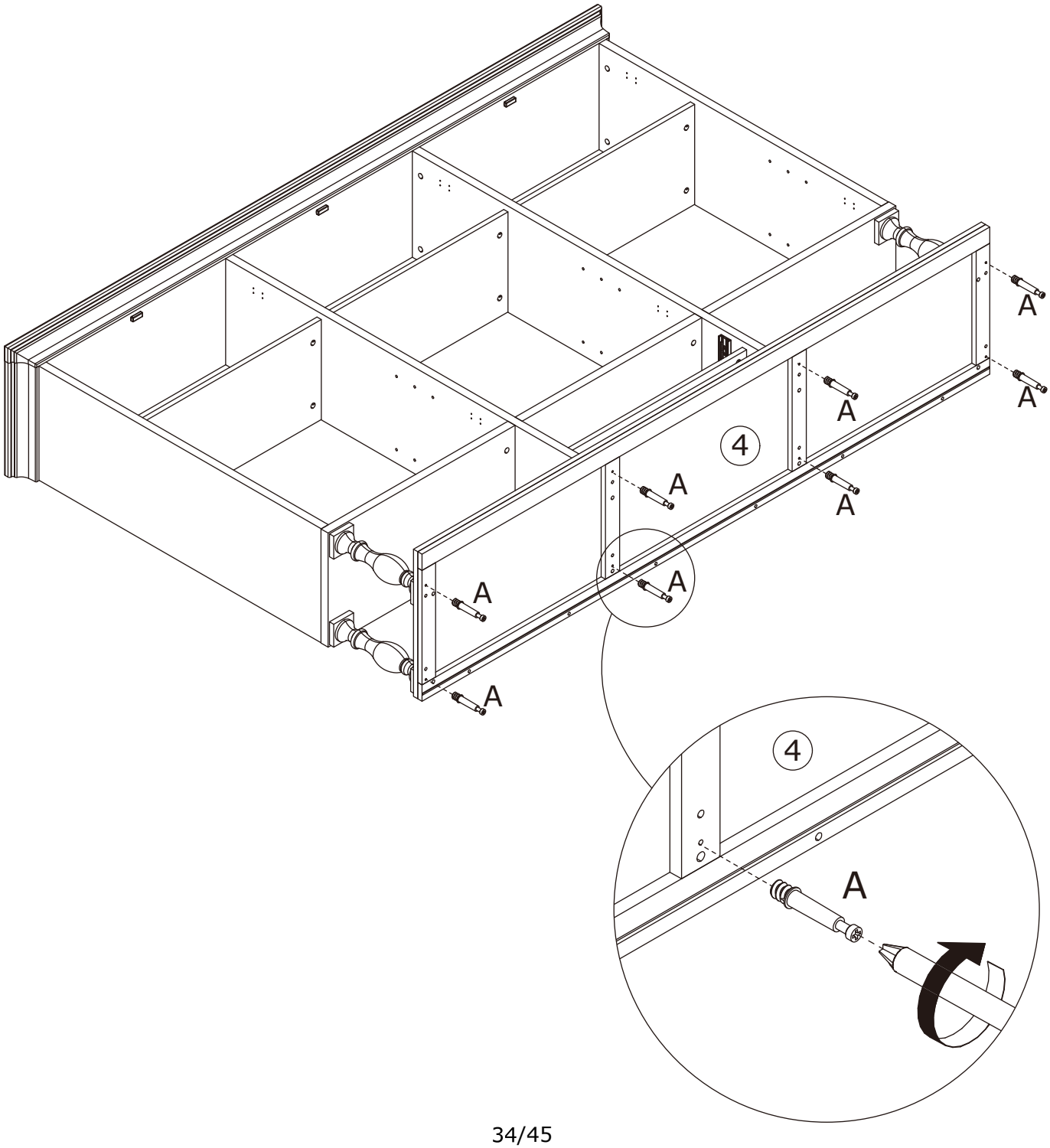

29

B x 8	C x 14	
		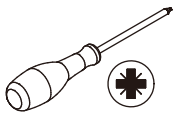
∅15 x 9.6 mm	∅7.8 x 30 mm	

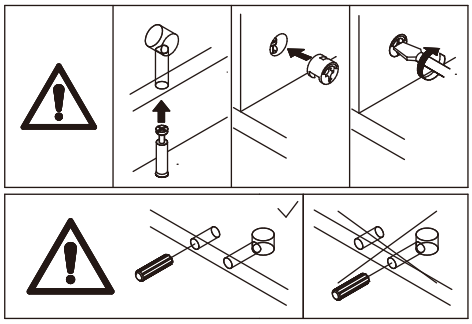

Connect Panel 4 to the combined unit using dowel pin (C), then tighten by turning cam lock (B) clockwise.

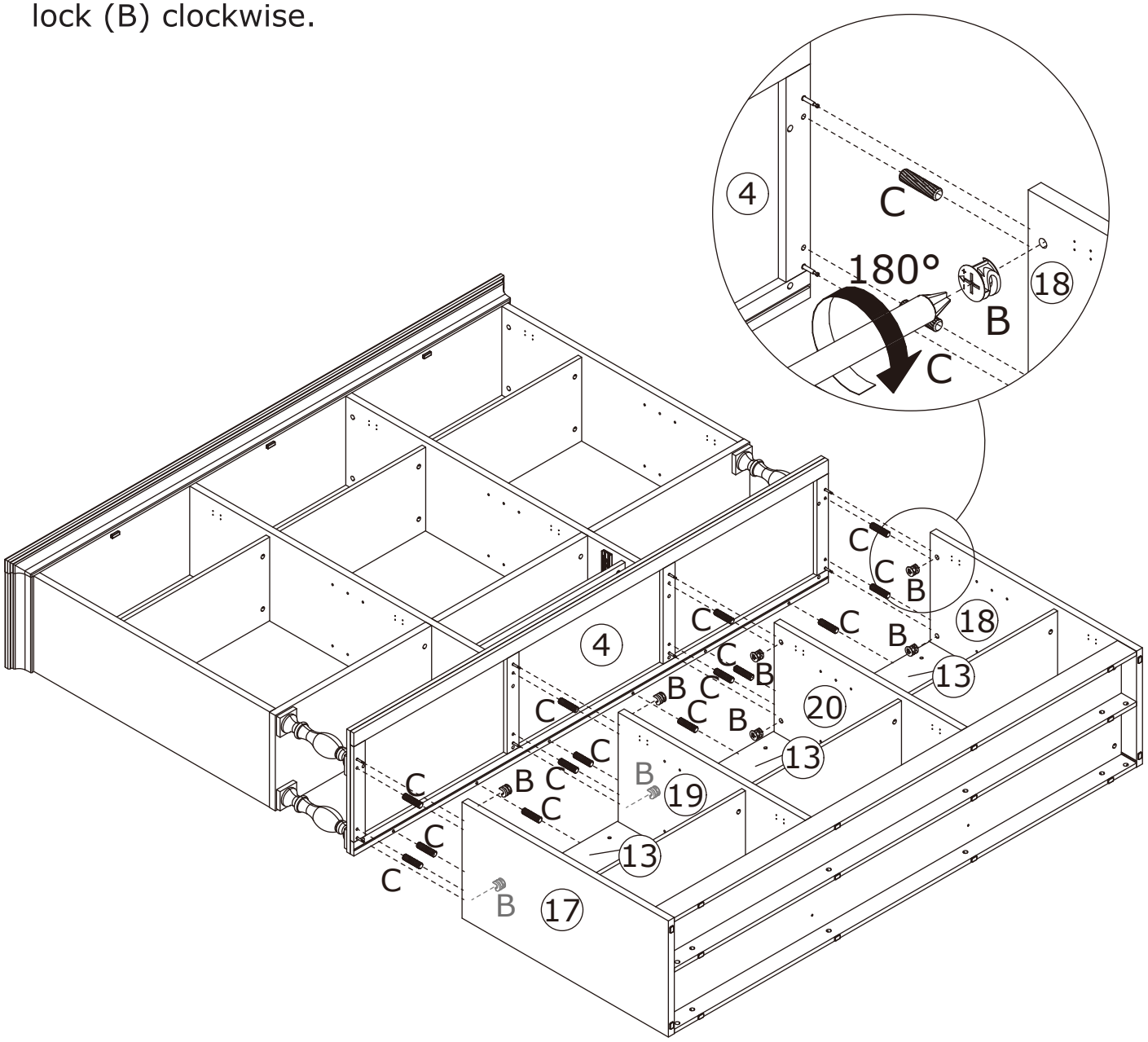

30

V x 24	W x 24	
		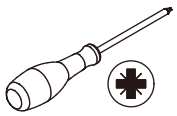
14 x 13 mm	∅3 x 16 mm	

Insert clip (V) into the back panel slots and secure them with screw (W).

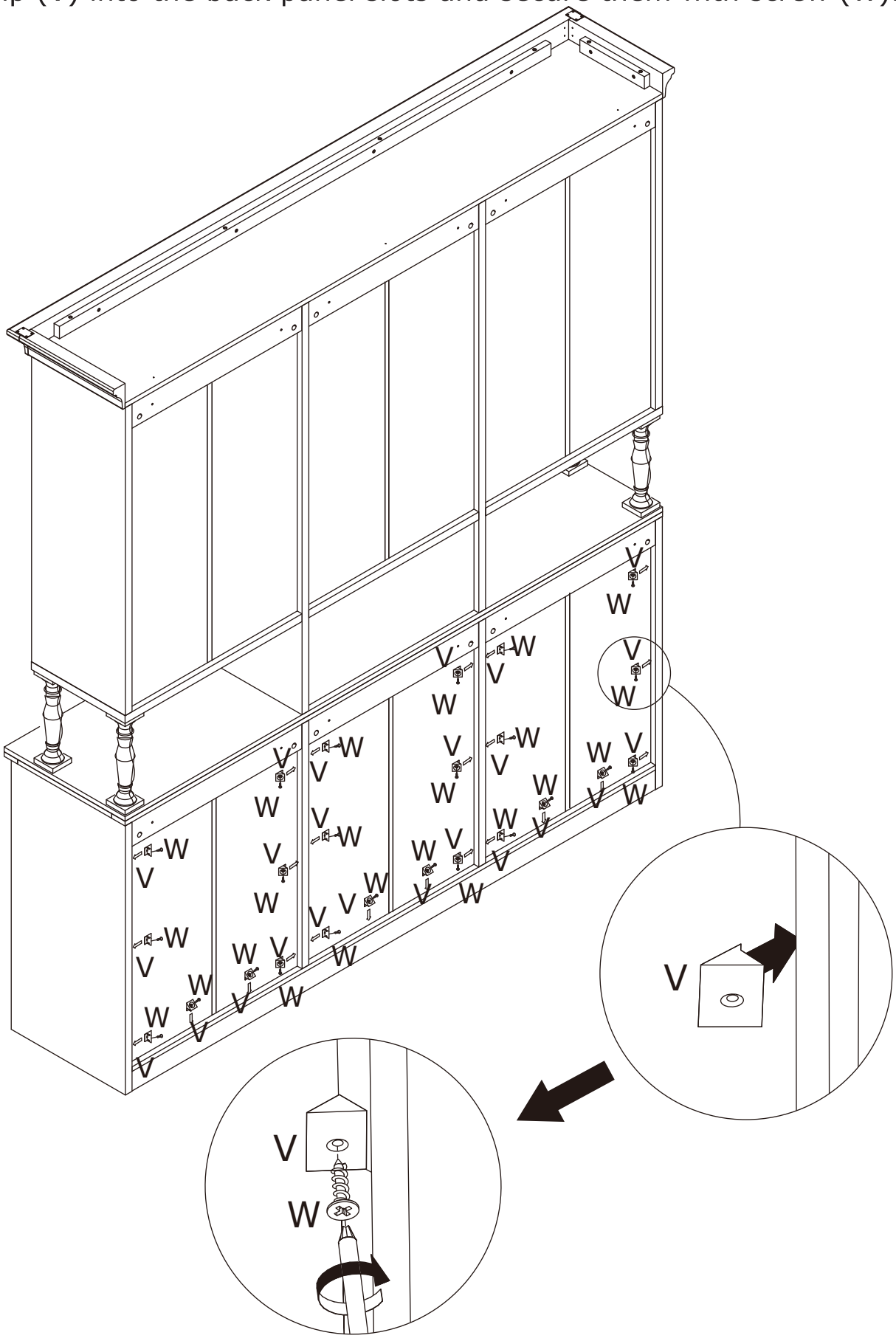

31

F x 6	G x 3	Q x 3	
∅4 x 50 mm	∅4 x 40 mm	66 x 15 mm	
R x 9	S x 3		
∅6 x 30 mm	∅4 x 12 mm		

Install the anti-tip device.
Secure the cabinet to part (R) using screw (F).

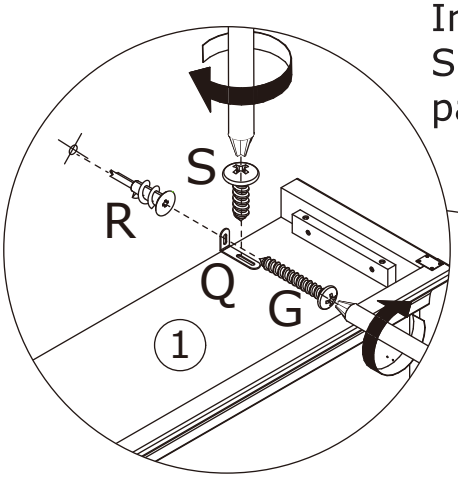

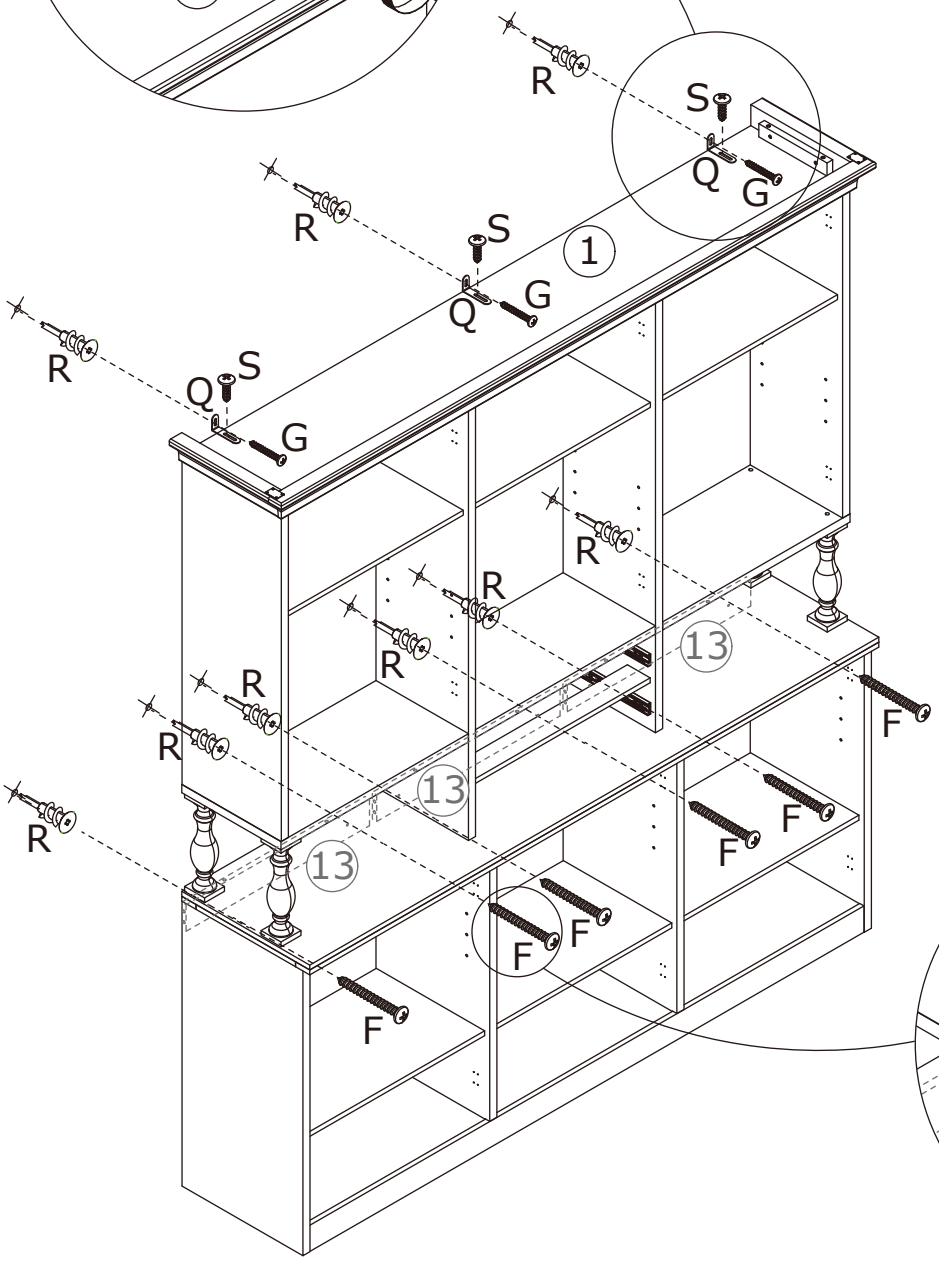

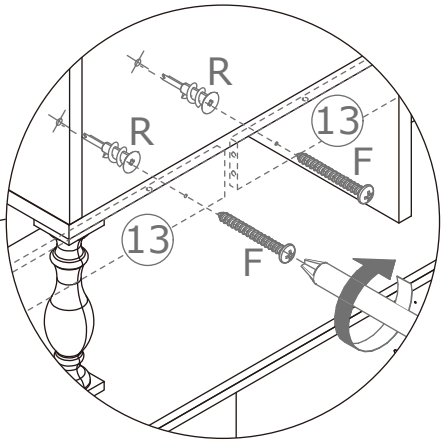

1.

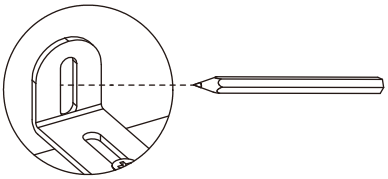

2.

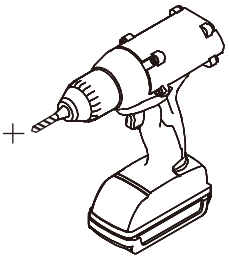

3.

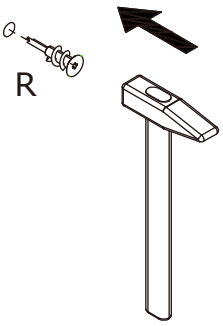

4.

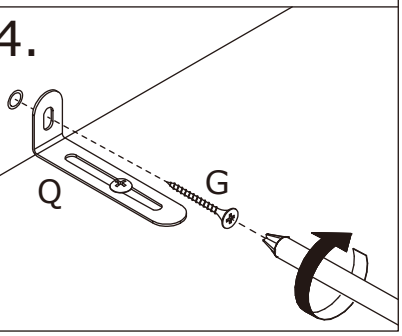

32

U x 24

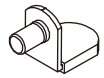

32 x 15 mm

1.

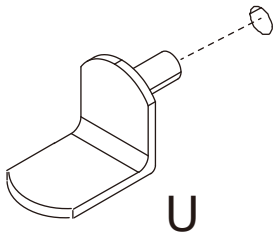

2.

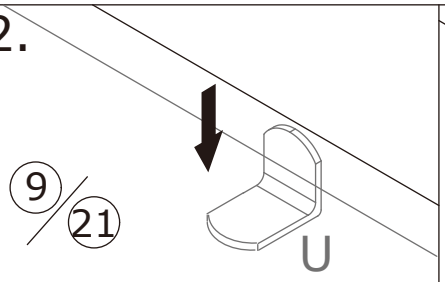

3.

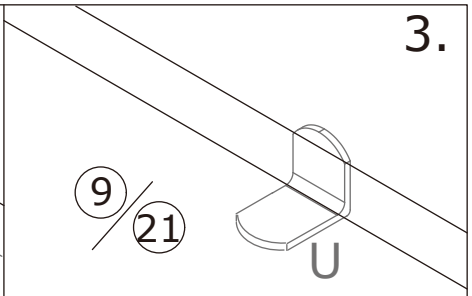

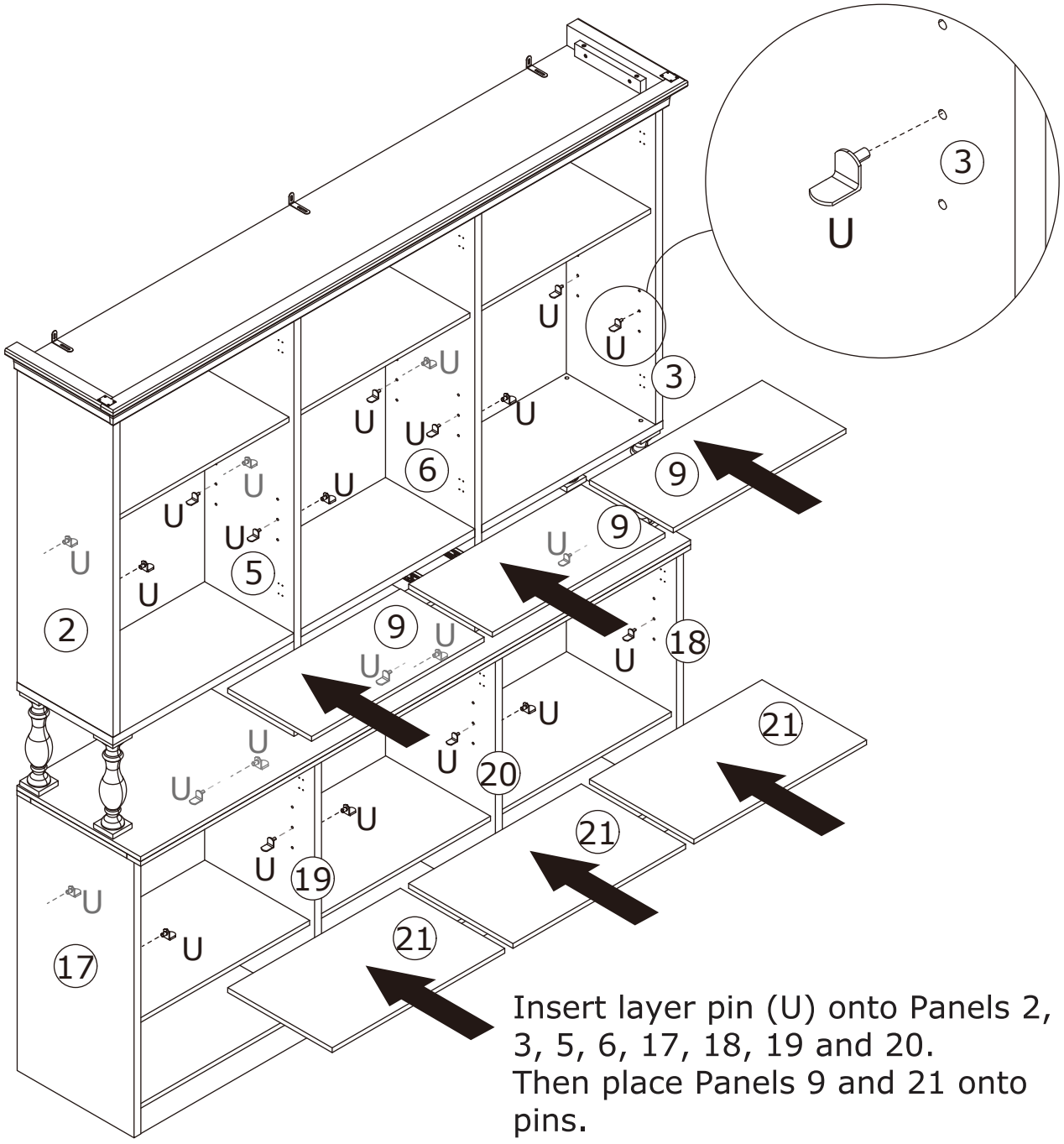

Insert layer pin (U) onto Panels 2, 3, 5, 6, 17, 18, 19 and 20.
Then place Panels 9 and 21 onto pins.

33

I x 12	K x 12	N x 12	P x 12	
				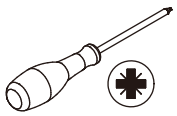
∅4 x 22 mm	∅20 x 25 mm	∅35 mm	∅4 x 14 mm	

Secure hinge (N) to Panels 26 and 27 using screw (P).
Secure knob (K) to Panels 26 and 27 using screw (I).

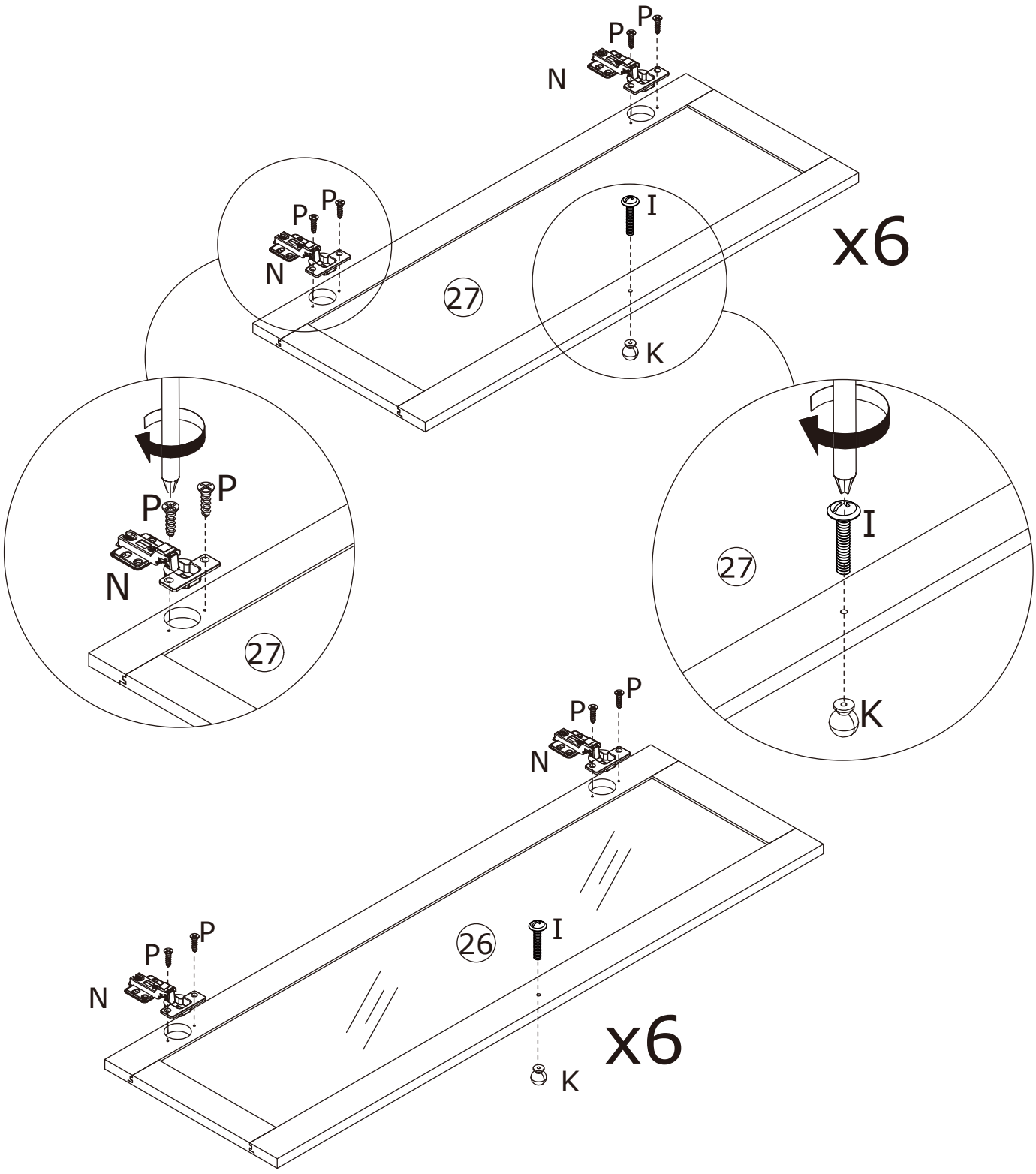

34

P x 96



∅4 x 14 mm

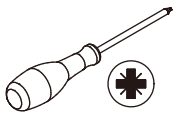

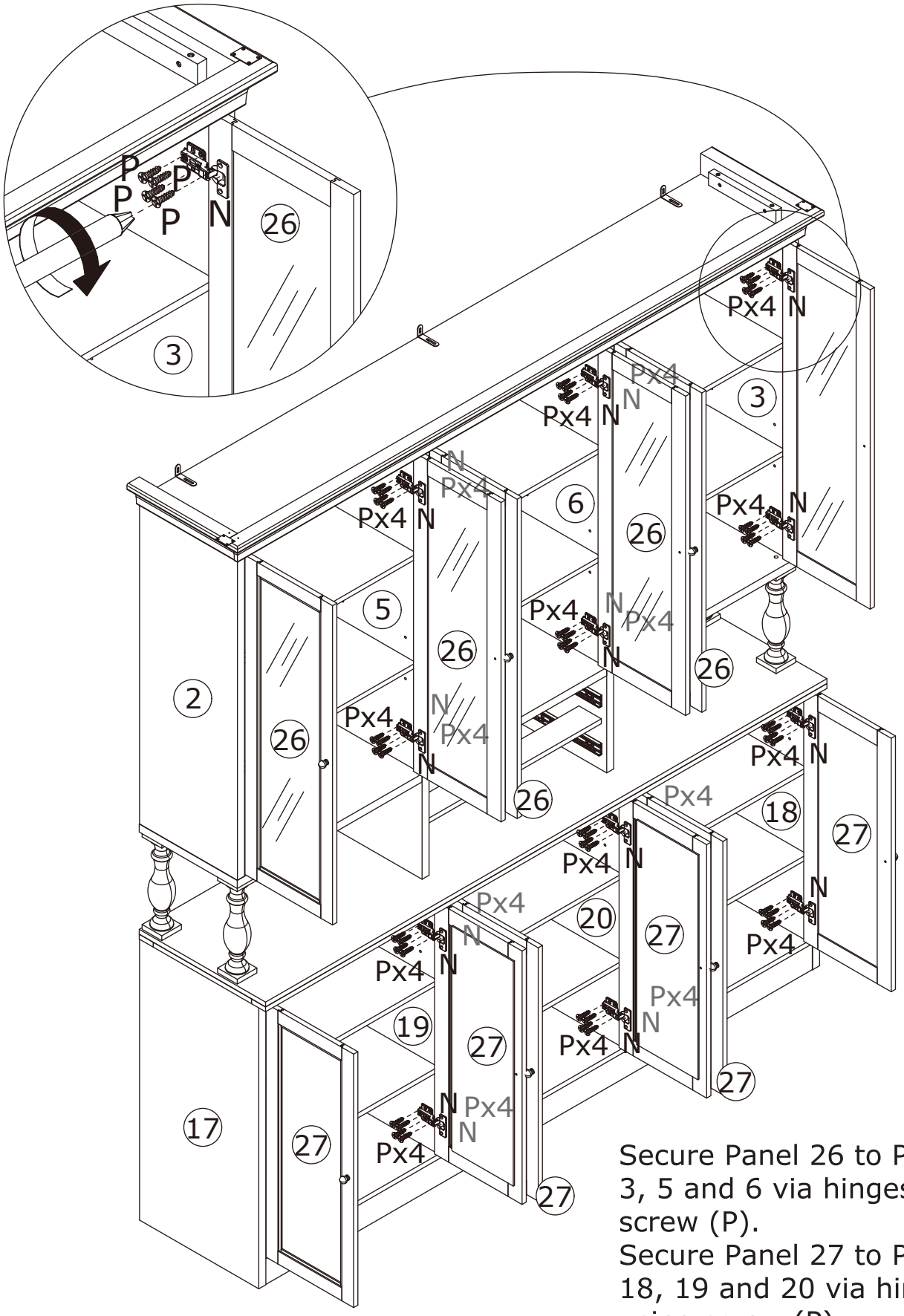

Secure Panel 26 to Panels 2, 3, 5 and 6 via hinges using screw (P).
Secure Panel 27 to Panels 17, 18, 19 and 20 via hinges using screw (P).

35

L x 10

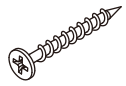

∅3.8 x 35 mm

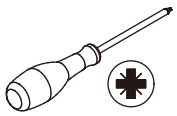

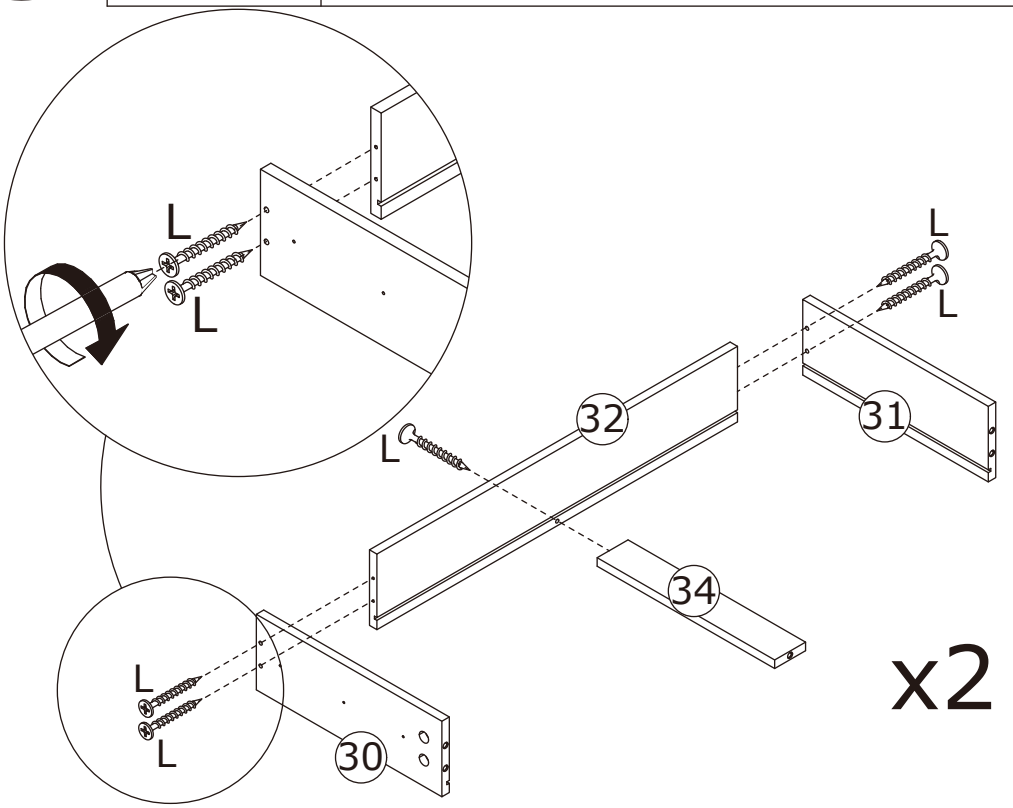

Secure Panels 30, 31 and 34 to Panel 32 using screw (L). Insert Panel 33 along the available slots.

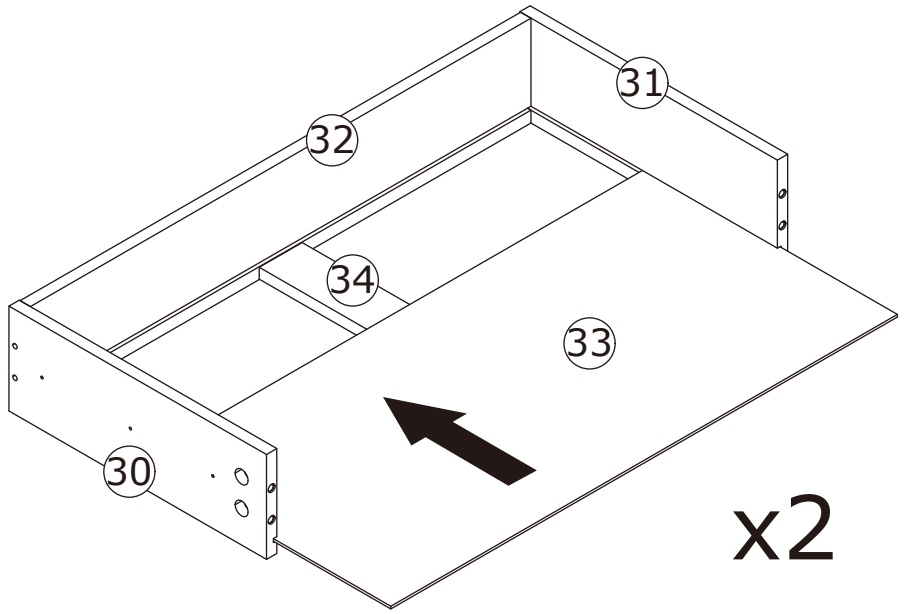

36

A x 10	B x 10	J x 2	K x 12	
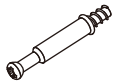				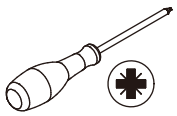
∅6 x 35 mm	∅15 x 9.6 mm	∅4 x 14 mm	∅20 x 25 mm	

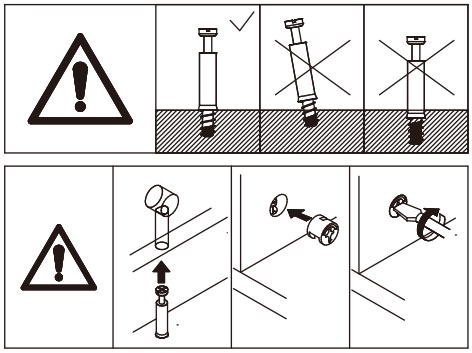

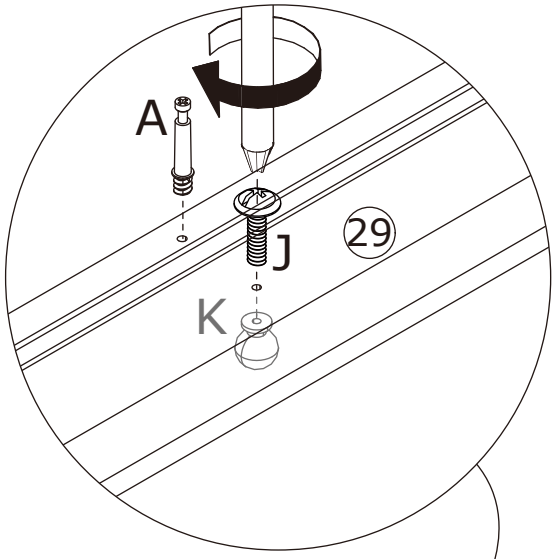

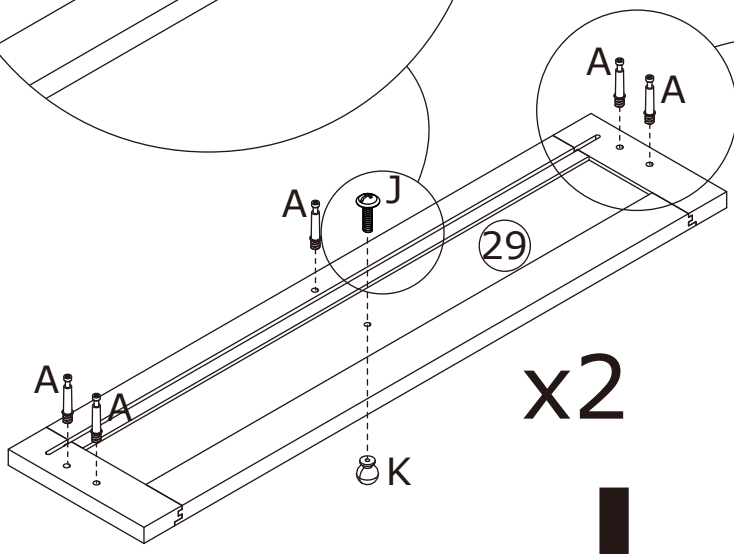

x2

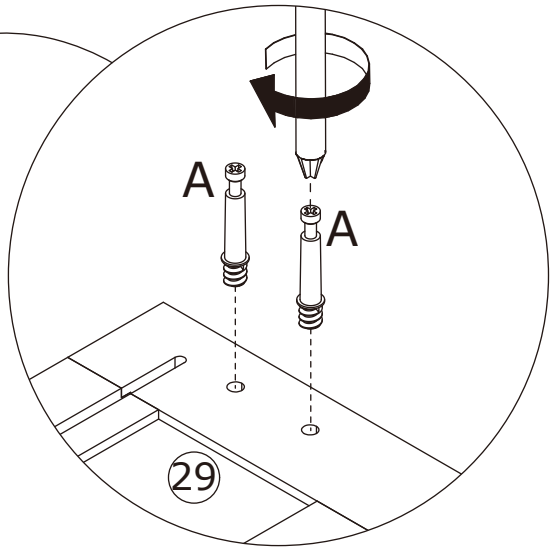

Screw eccentric rod (A) onto Panel 29.
Secure knob (K) to Panel 29 using screw (J).

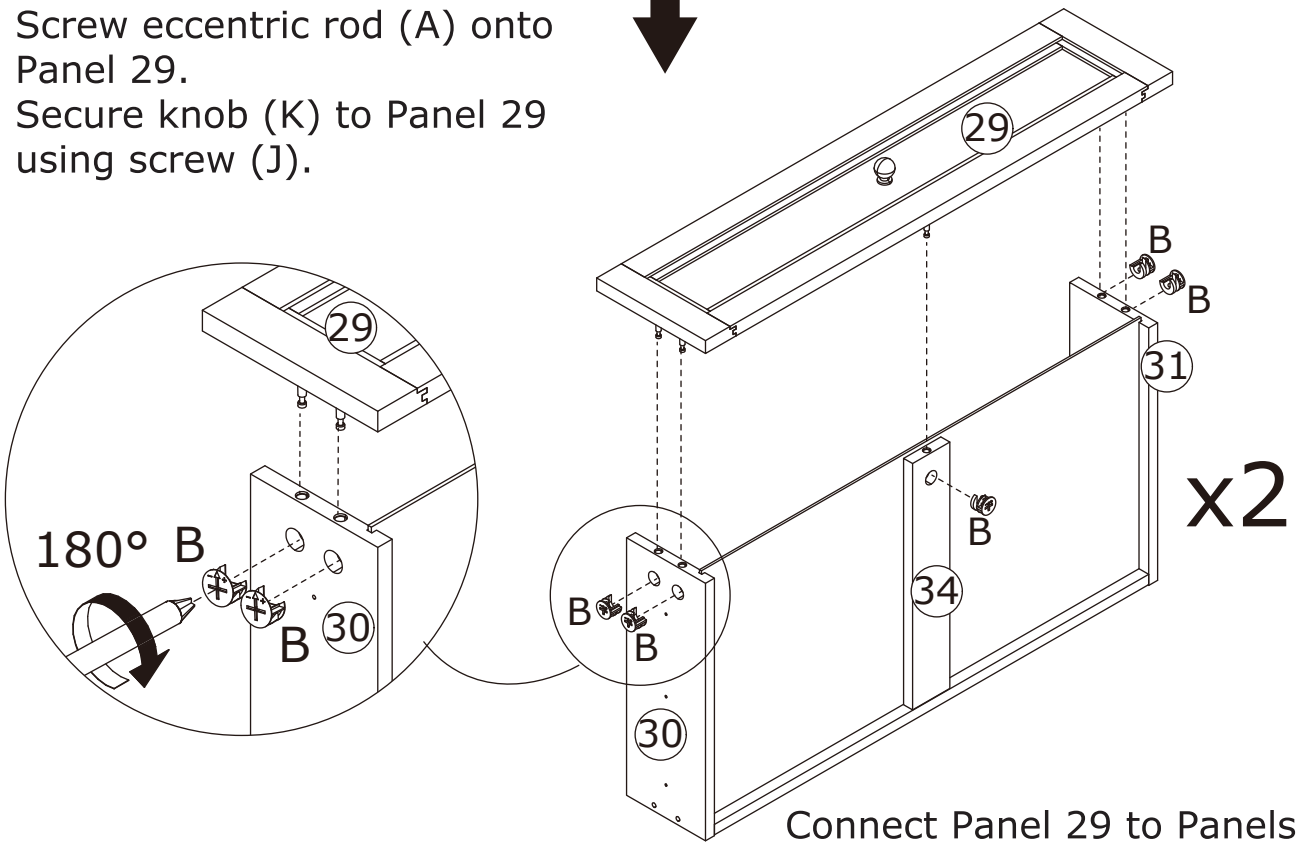

Connect Panel 29 to Panels 30, 31 and 34, then tighten by turning cam lock (B) clockwise.

37

X x 4	Y x 12	
 X-2	 ∅3.5 x 12 mm	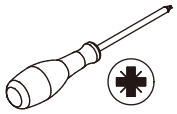

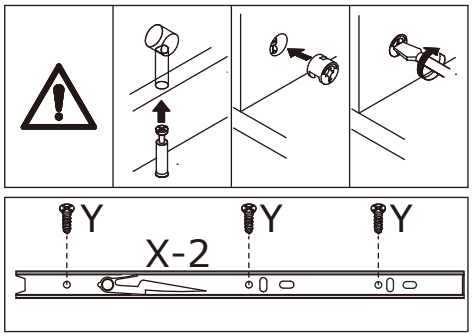

Secure slide rail (X-2) to Panels 30 and 31 using screw (Y).

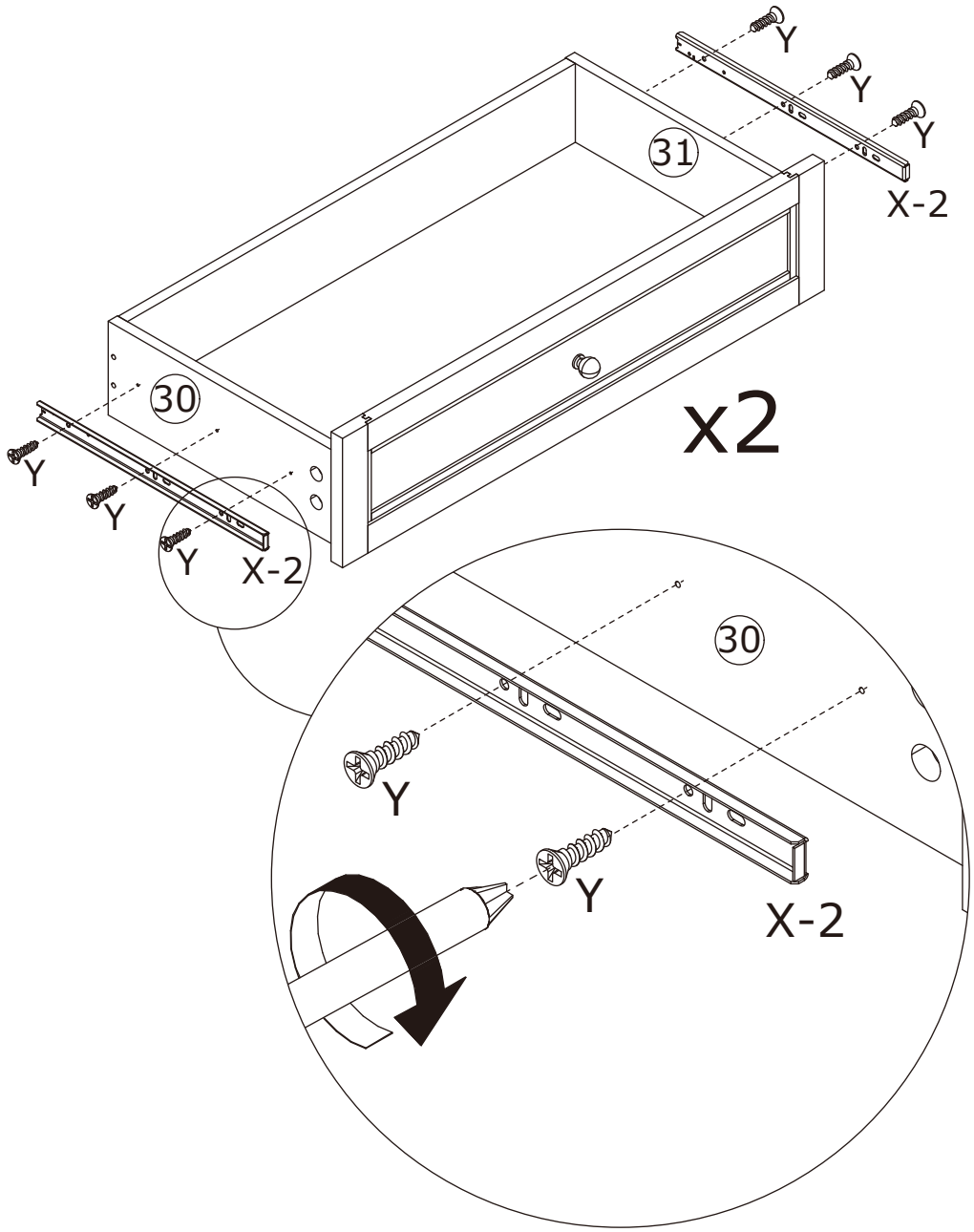

38

Install the drawers into the unit.

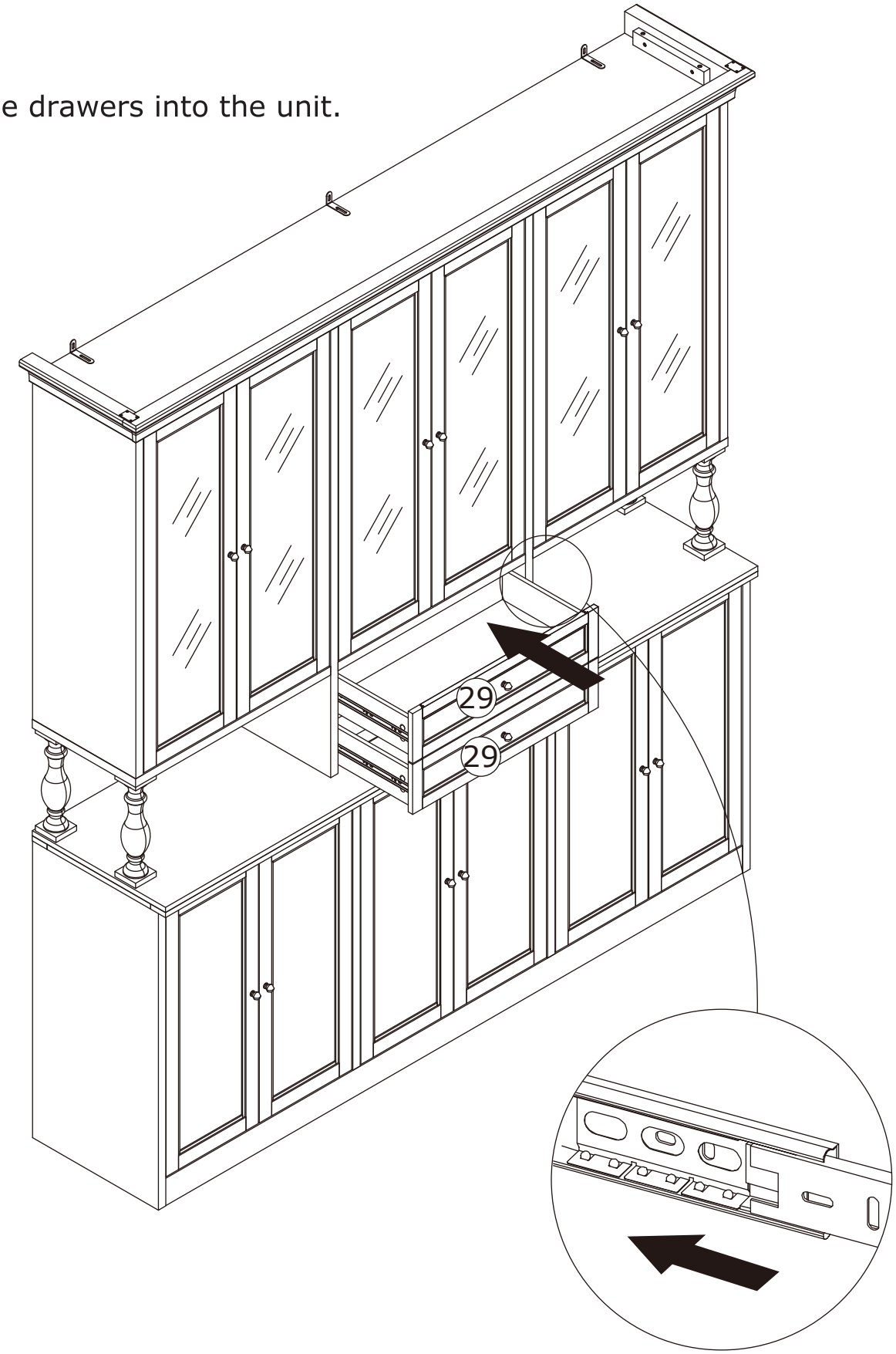

39

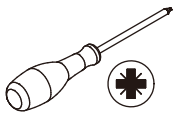

If the door panels are not aligned, please adjust the screws on the hinges according to the illustration.

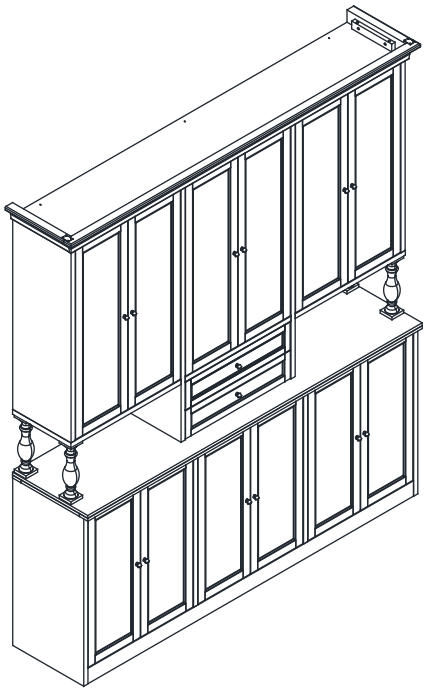

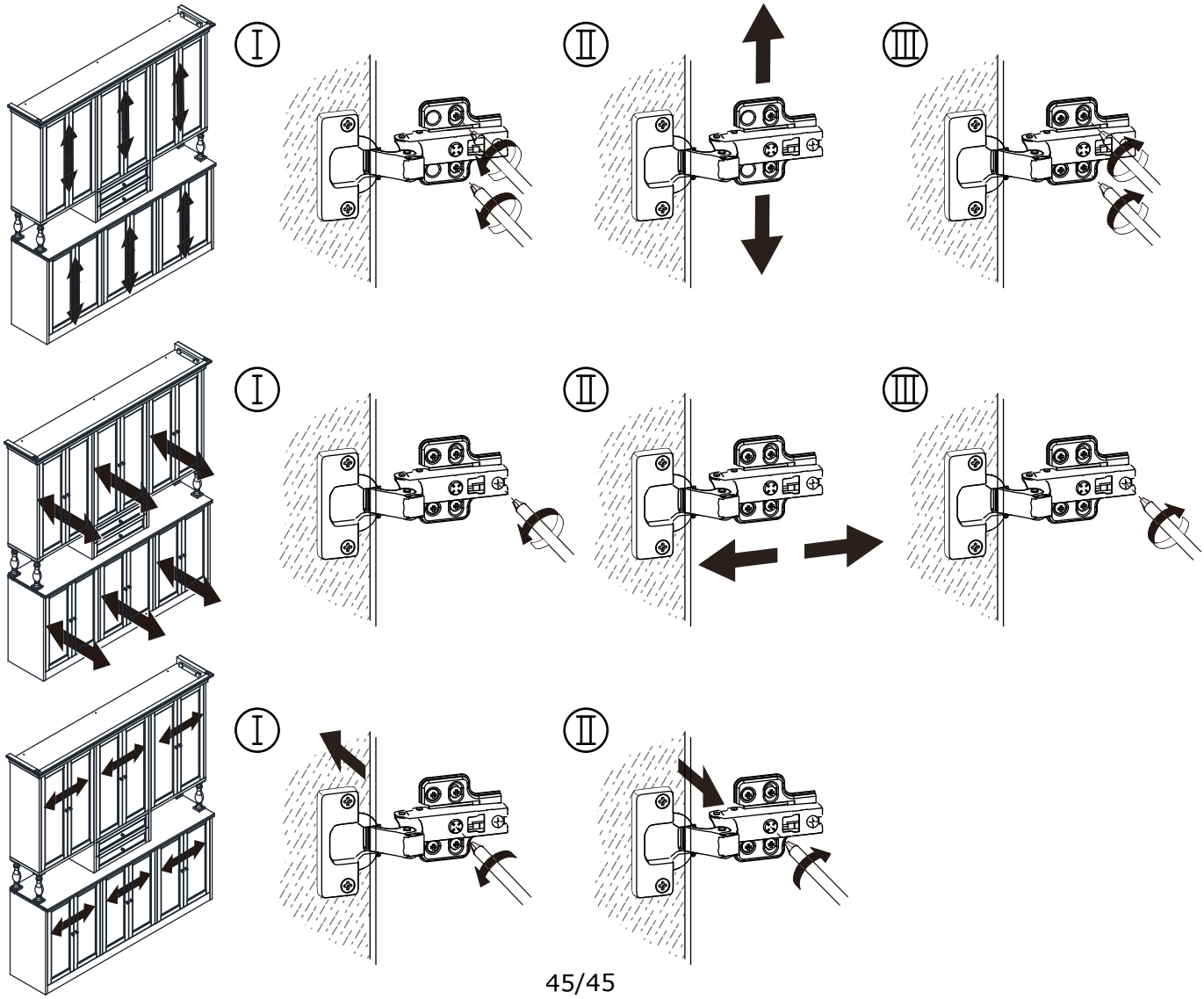

WARRANTY

WARRANTY CLAIMS

- There is a 30-day warranty for broken furniture or any other problems that do not work properly. The warranty will start from the date of purchase which must be verified by proof of purchase.

- Before making a claim, we may be able to answer your query, simply call us. Please leave your purchase order number, along with some details of the problem, if you want a replacement part. We will arrange within 48 hours. If there is out of stock, we will reply with a shipping date.

- The product must be used in accordance with the instructions provided. For health reasons.

- For other reasons, if the furniture needs to be returned, it must be cleaned and dried and operated within 30 days of receipt.

Type of Warranty Claim

- Failure to follow the furniture instructions will invalidate the warranty. Attention please.

- Does not include damage during installation, but includes damage during transportation.

Scope of responsibility

- Shall not bear any responsibility for misuse or user damage and / or loss of parts during the installation of furniture.

- After using, the damage and scratches of the furniture are not covered by the warranty.

The Warranty Relates to All Bought in The Us and Covers The Following Areas

- Sheet parts: 1 month from the date of purchase.

- Electrical parts: 1 month from the date of purchase.

RETURNS

CHANGED YOUR MIND AND NEED TO RETURN YOU ITEM?

PLEASE FOLLOW THE BELOW INSTRUCTIONS:

- If you have purchased and have simply changed your mind, follow the retailer's instructions for returns.

DEFECTIVE ITEMS

- If your item is defective in any way, i.e. it doesn't work but you can't identify why, in the first instance, please call us.

DAMAGED ITEMS

- If you receive an order with obvious shipping damage from the retailer, then we suggest the delivery is refused. If the delivery has been accepted and then shipping damage is found, please follow the specific instructions advised by the retailer.
  In all circumstances please save all packaging material and paperwork for the order.
  Please be aware that if you dispose of packaging material or attempt to return the merchandise without contacting the fulfiller, you jeopardise your chances of making a claim, and you may not receive a credit for the return.