KVSP3122B0,1,2,5,6,8

31" Stainless Steel Sink With Iron Bathroom Console Sink Base

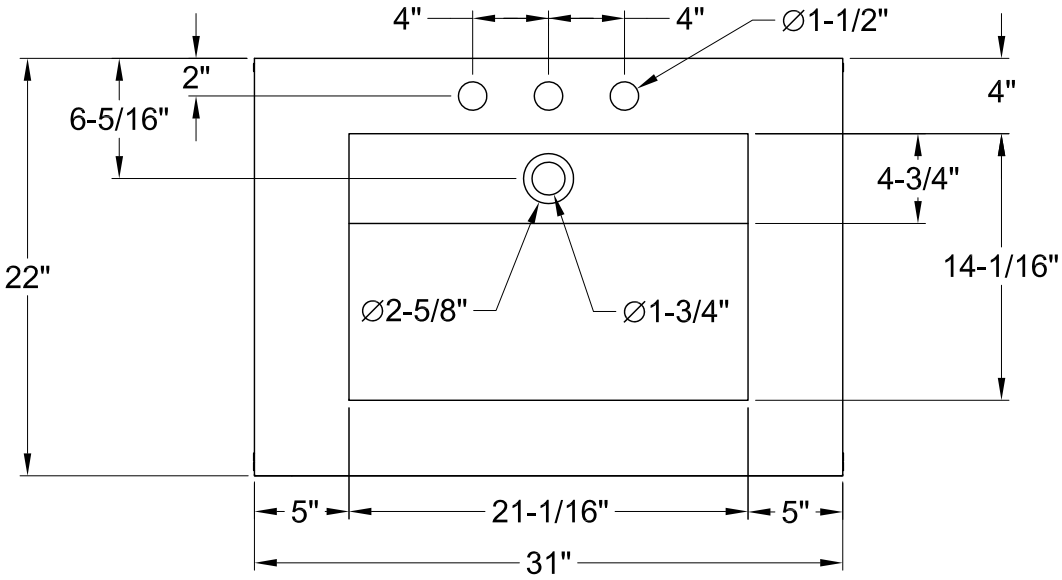

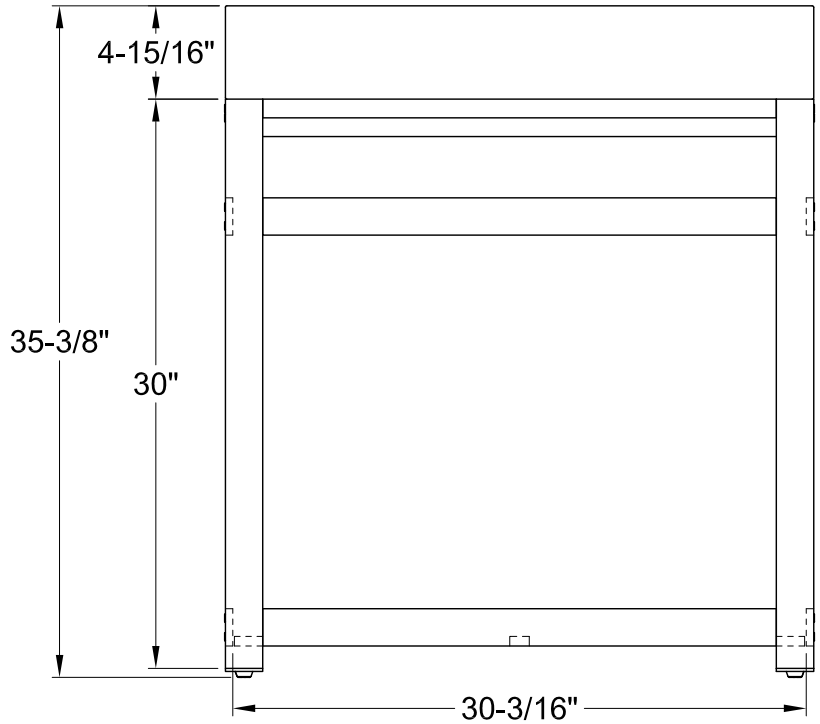

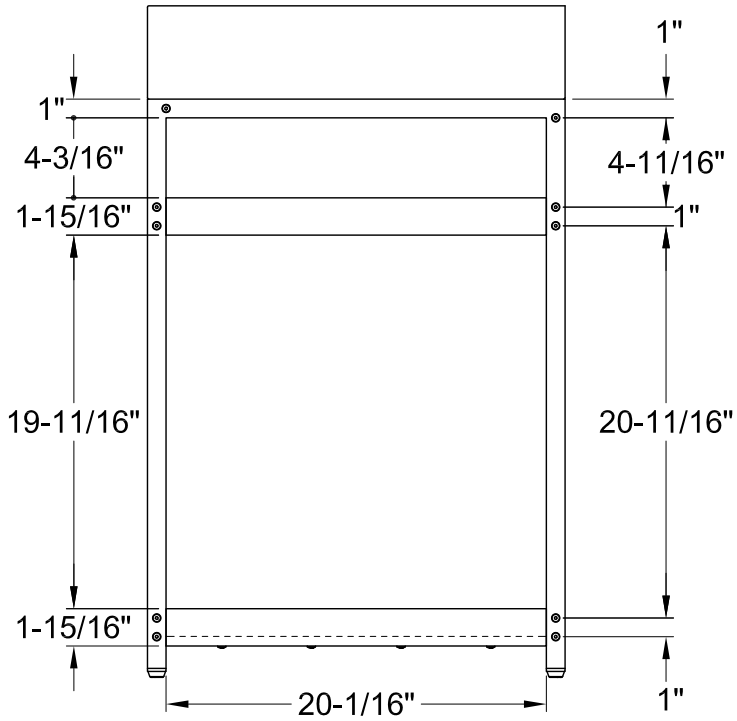

Ref# KVSP3122B0,1,2,5,6,8 | 2018-07-A