ASSEMBLY INSTRUCTION

Console Table 1420mm

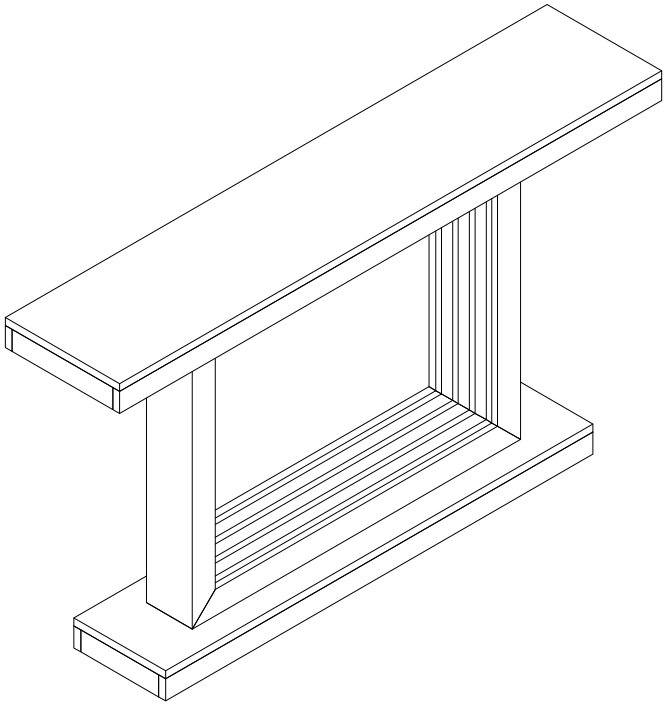

REPLACEMENT PARTS

Please do not contact the company purchased from as we can help you faster.

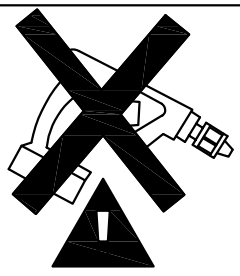

. Use of power tool to assemble this product will invalidate any claim and damage this product making it unsafe !!!
. Please assemble on a clean soft surface to avoid damage.

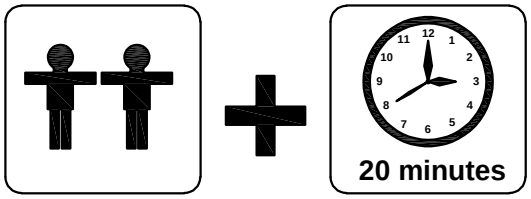

Tools Required

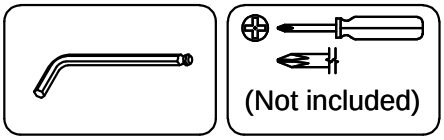

Part list - Console Table 1420mm

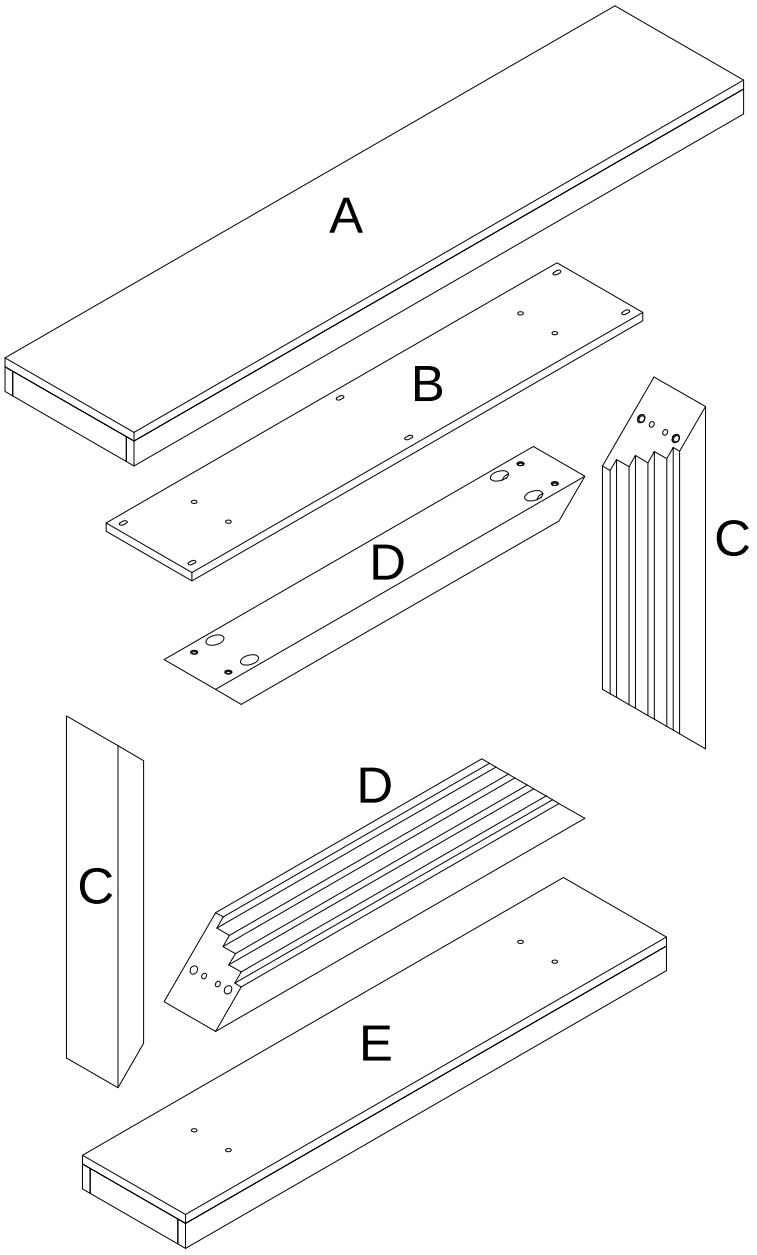

Identifying the hardware-*Identify the hardware using the illustrations below*

① M6 x 30mm 14	② M8 x 55mm 08	③ Ø19 Washer 14
④ Ø10 x 30mm 08	⑤ 50x20x2mm 04	⑥ M4 01
⑦ M5 01		

STEP 1

④ 08
Ø10 x 30mm

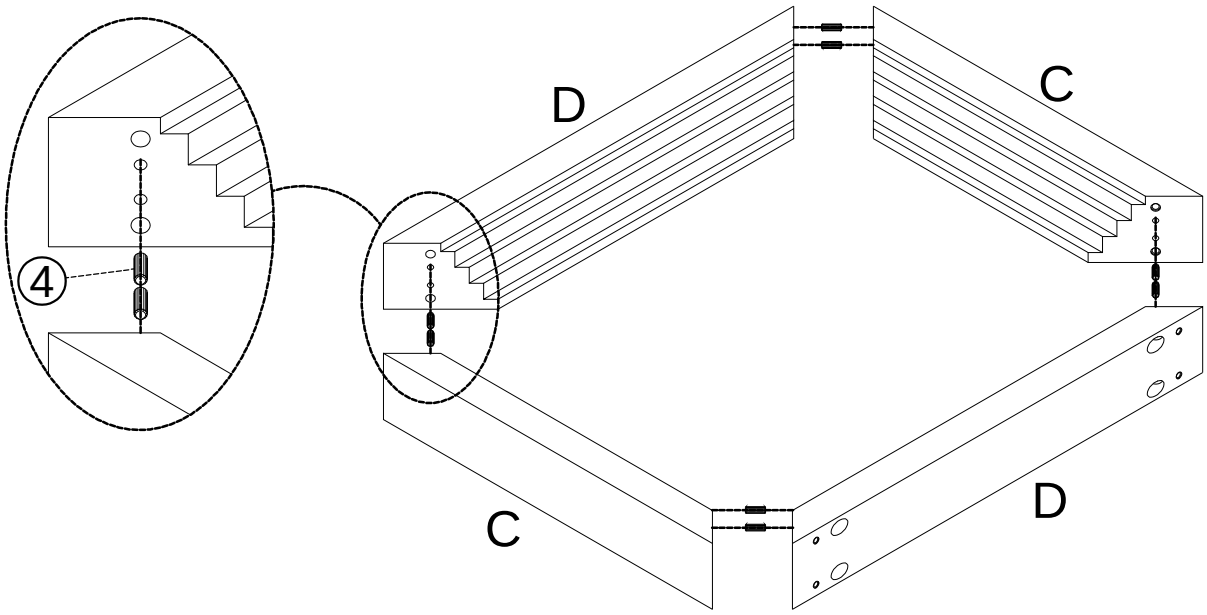

STEP 2

② 08
M8 x 55mm

⑦ 01
M5

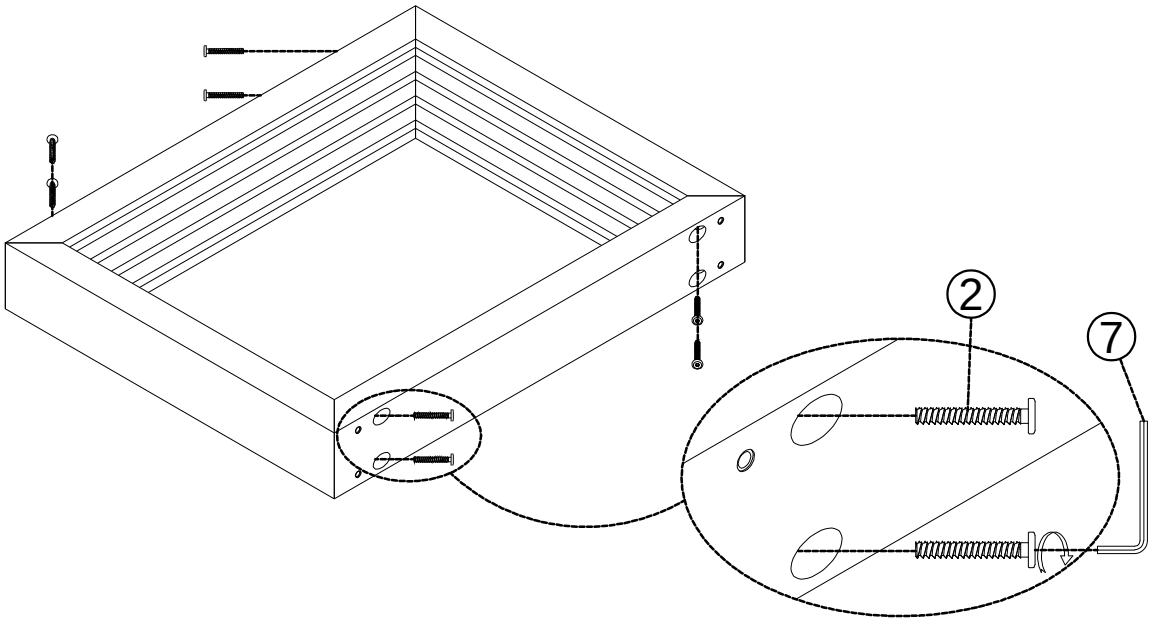

STEP 3

① M6 x 30mm 04	③ Ø19 Washer 04	⑤ 50x20x2mm 04
⑥ M4 01		

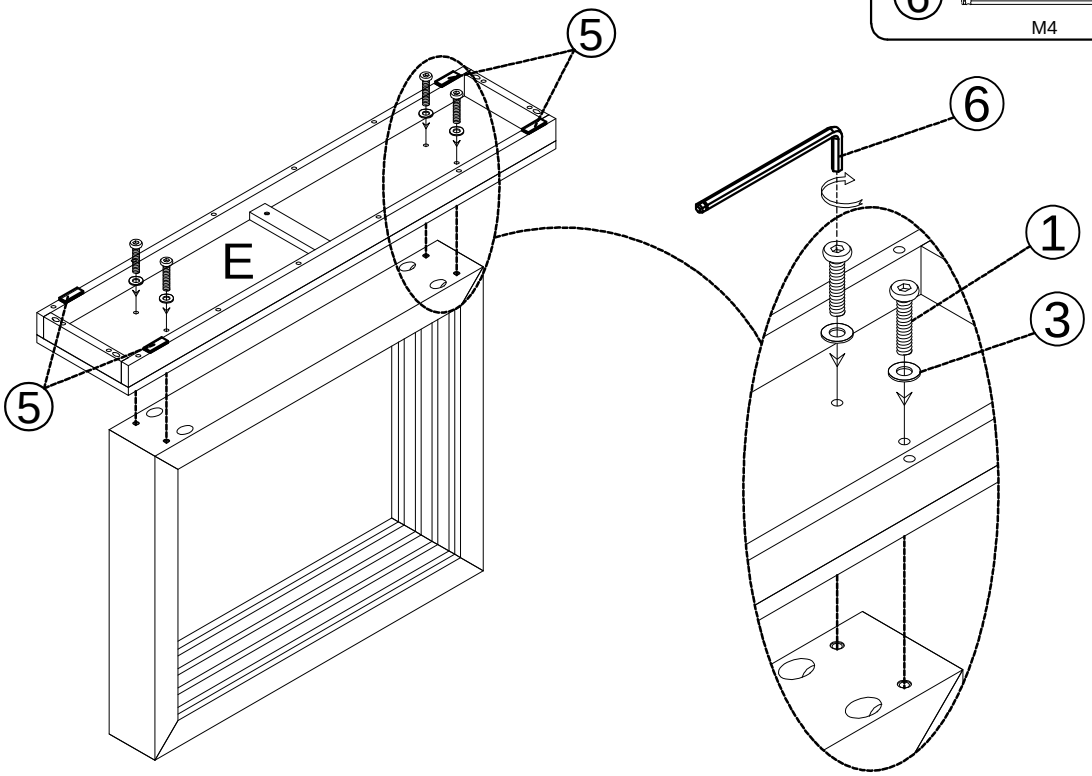

STEP 4

① M6 x 30mm 04	③ Ø19 Washer 04	⑥ M4 01

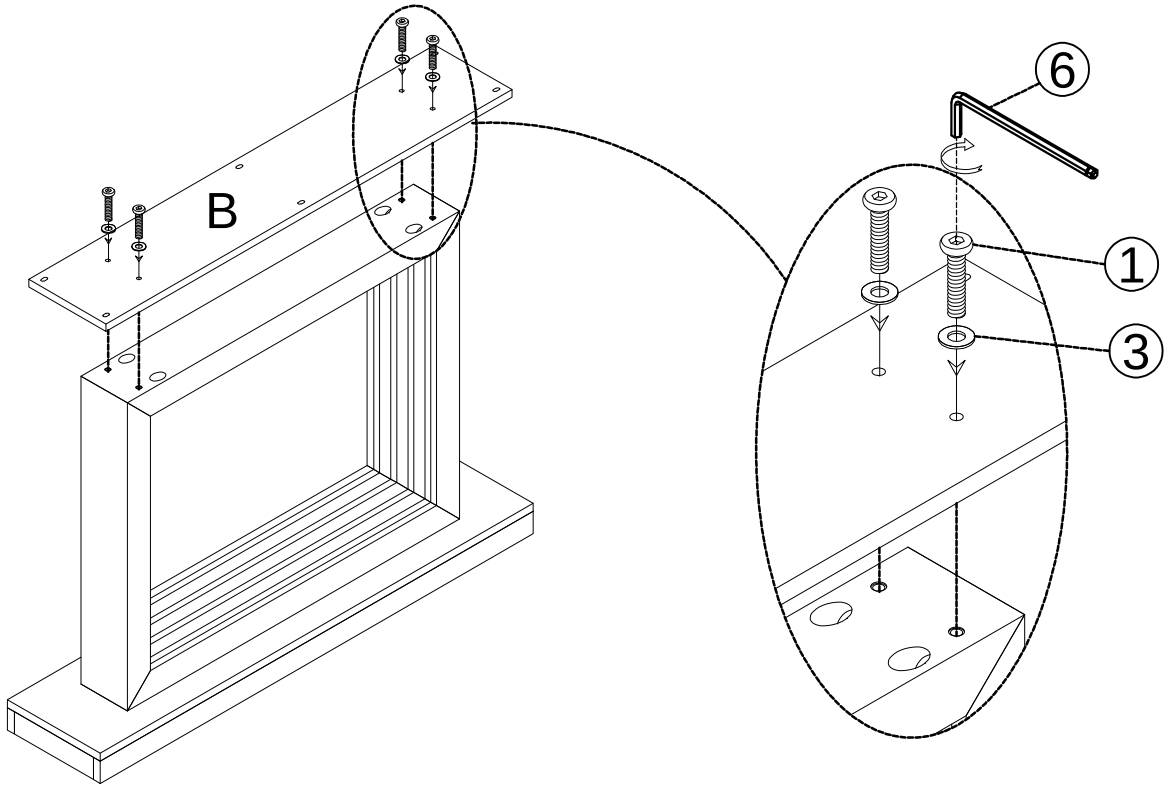

STEP 5

①	③	⑥
 06	 06	 01
M6 x 30mm	Ø19 Washer	M4

