ASSEMBLY INSTRUCTIONS

TAUPE/RED KITCHEN CART

NOTE:THIS ITEM NOT RECOMMENDED FOR COMMERCIAL
USE KEEP THIS DOCUMENT FOR REFERENCE IN CASE PARTS ARE NEEDED
DO NOT TIGHTEN SCREWS UNTIL COMPLETELY ASSEMBLED!!

NO		PARTS LIST	Q'TY
A	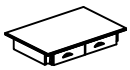	TOP	1pc
B		CROSS BAR	1pc
C		BAR SUPPORT	2pcs
D		WOOD PLUG	2pcs
E		MIDDLE SHELF	1pc
F		BOTTOM SHELF	1pc
G	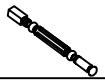	LEG	4pcs
H		WHEEL	4pcs

NO	HARDWARE LIST			Q'TY
1	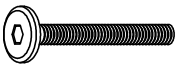	Bolt	Ø5/16"x1-1/2"	2pcs
2		Bolt	Ø5/16"x2"	16pcs
3		Lock Washer	Ø5/16"x10Dx1mm	18pcs
4		Flat Washer	Ø5/16"x22Dx2mm	22pcs
5		Allen Wrench	2-1/4"x4mm	1pc
6	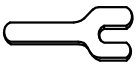	WRENCH	3-1/2"x25Dx2mm	1pc

ASSEMBLY INSTRUCTIONS

TAUPE/RED KITCHEN CART

NOTE:THIS ITEM NOT RECOMMENDED FOR COMMERCIAL
USE KEEP THIS DOCUMENT FOR REFERENCE IN CASE PARTS ARE NEEDED
DO NOT TIGHTEN SCREWS UNTIL COMPLETELY ASSEMBLED!!

STEP 1

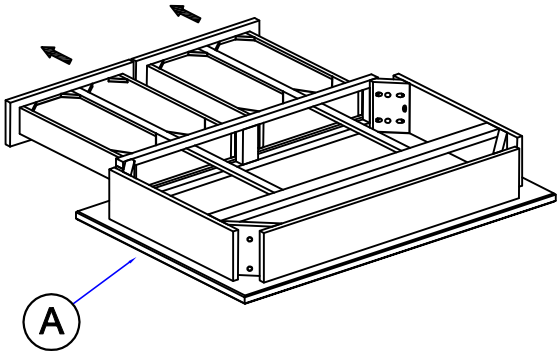

Before assemble ,please
pull out the drawer first

STEP 2

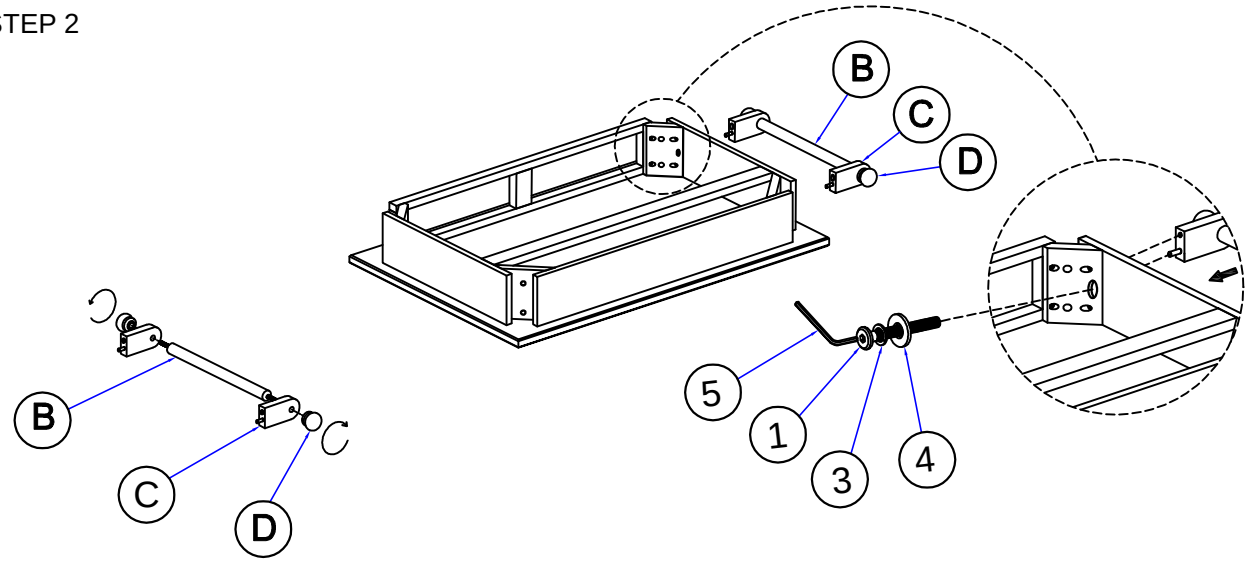

STEP 3

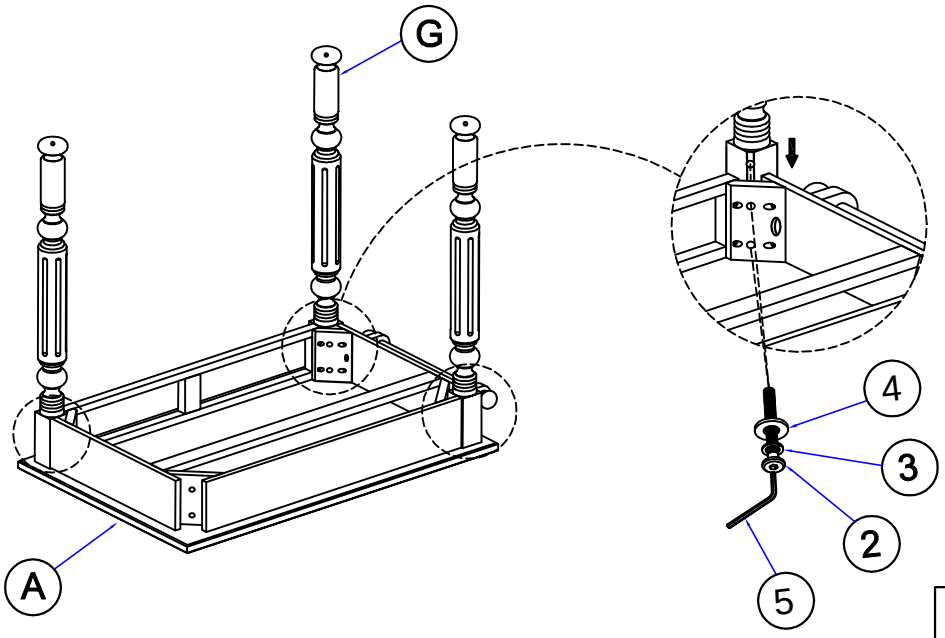

ASSEMBLY INSTRUCTIONS

TAUPE/RED KITCHEN CART

NOTE:THIS ITEM NOT RECOMMENDED FOR COMMERCIAL
USE KEEP THIS DOCUMENT FOR REFERENCE IN CASE PARTS ARE NEEDED
DO NOT TIGHTEN SCREWS UNTIL COMPLETELY ASSEMBLED!!

STEP 4

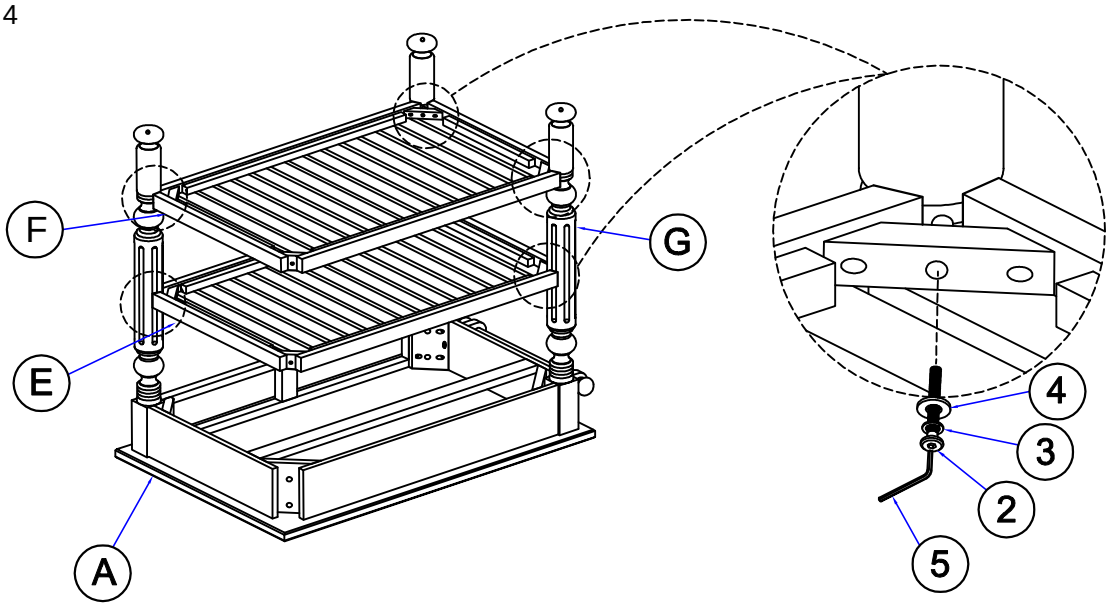

STEP 5

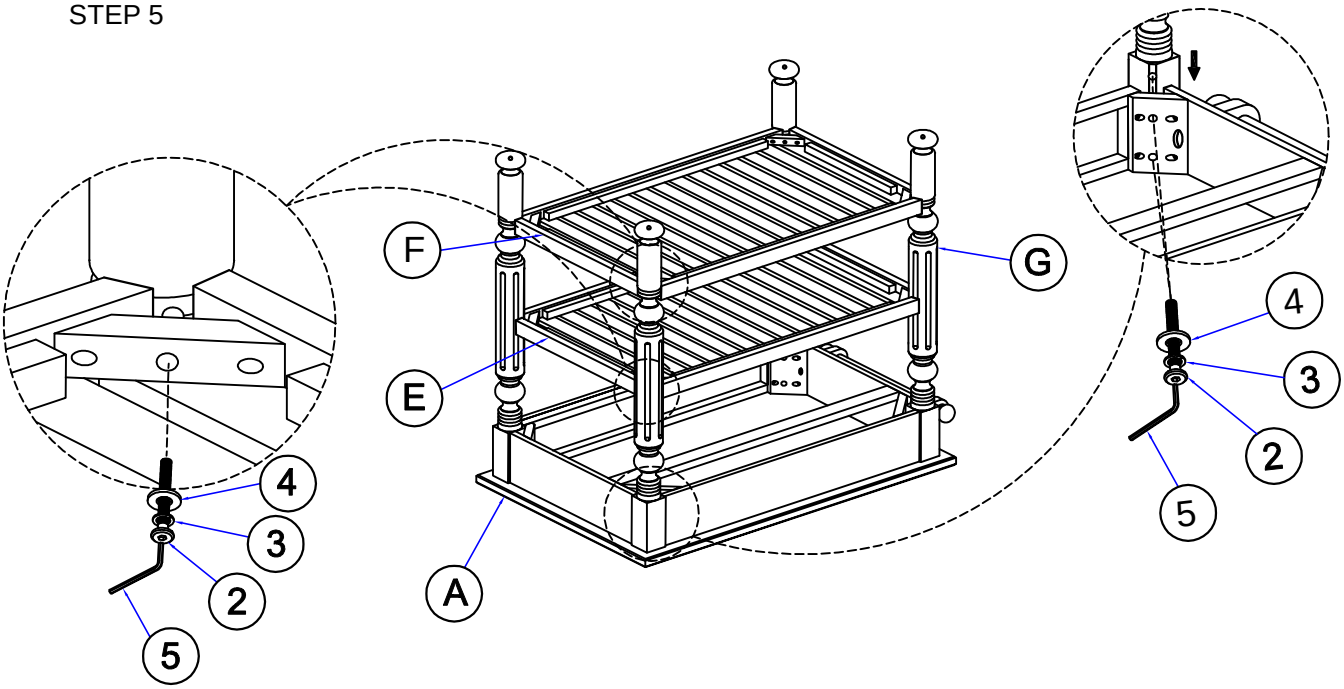

ASSEMBLY INSTRUCTIONS

TAUPE/RED KITCHEN CART

NOTE:THIS ITEM NOT RECOMMENDED FOR COMMERCIAL
USE KEEP THIS DOCUMENT FOR REFERENCE IN CASE PARTS ARE NEEDED
DO NOT TIGHTEN SCREWS UNTIL COMPLETELY ASSEMBLED!!

STEP 6 The front wheel has the brakes

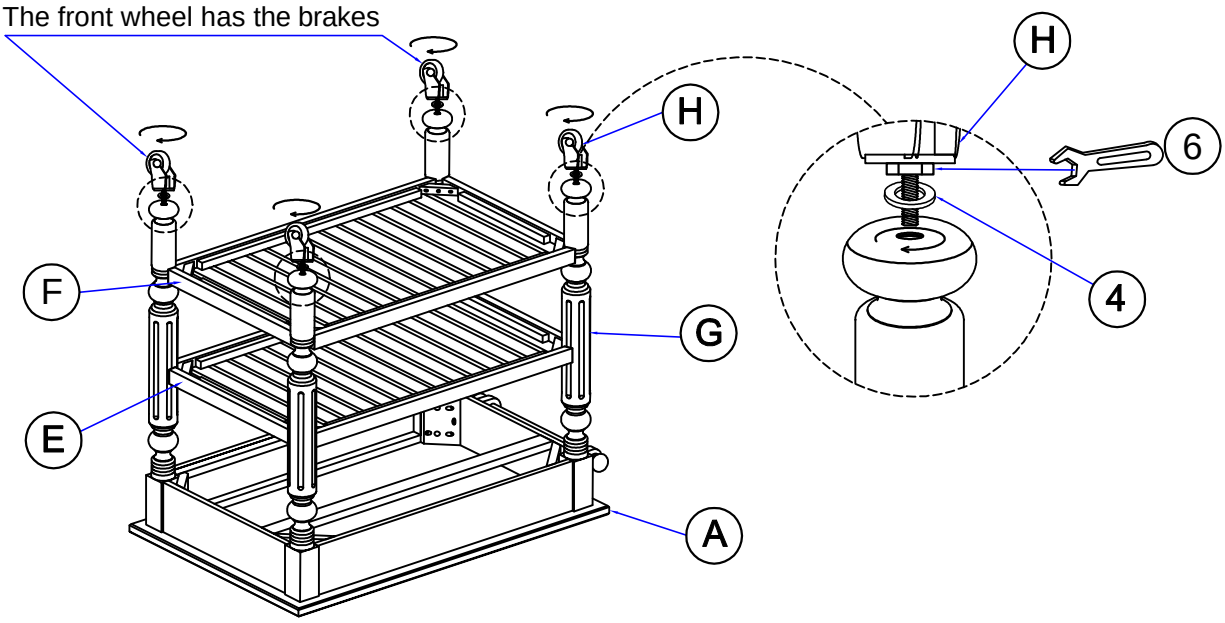

STEP 6

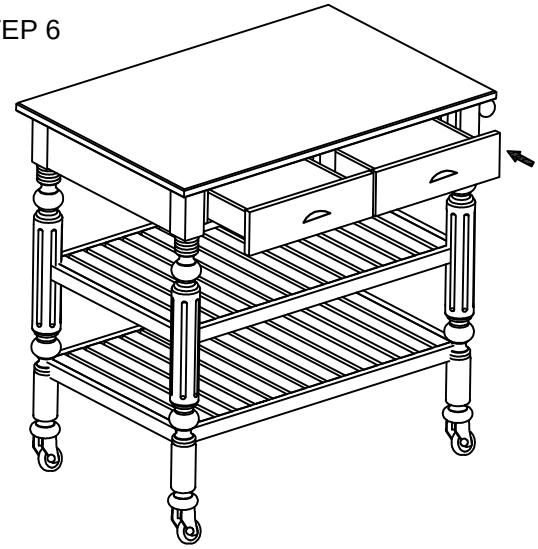

When the assembly is finished ,
then pull in the drawer

STEP 7

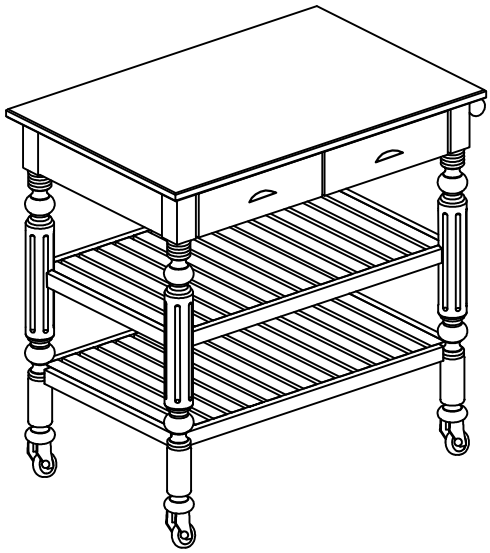

Assembly
Completed