ASSEMBLY INSTRUCTIONS

IMPORTANT NOTE:

** PLACE ALL PARTS ON A CLEAN AND SMOOTH SURFACE SUCH AS A RUG OR CARPET TO AVOID THE PARTS FROM BEING SCRATCHED.

** BEFORE YOU BEGIN, KINDLY FOLLOW THE ASSEMBLY INSTRUCTIONS STEP BY STEP

** DO NOT SIT UNTIL THE SOFA FULLY SET-UP.

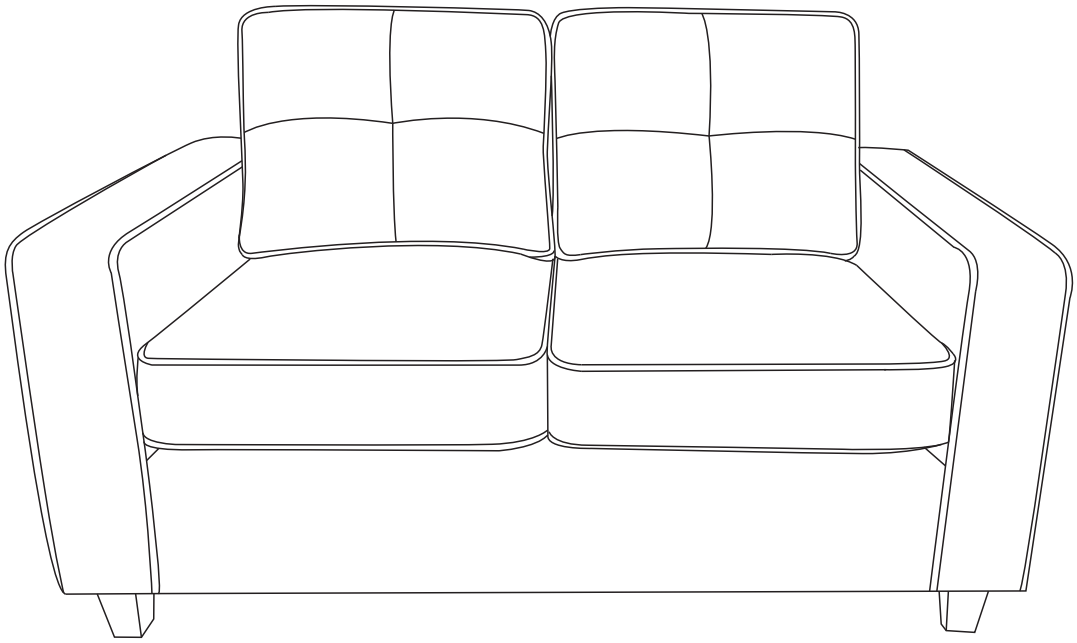

PARTS AND HARDWARE

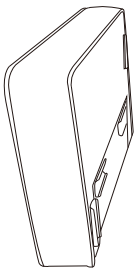

A:Left Arm 1pc

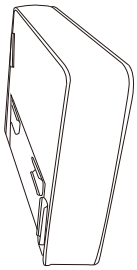

B:Right Arm 1pc

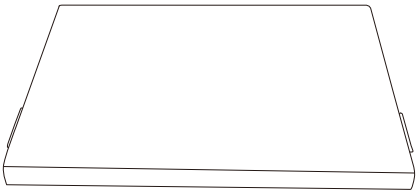

C:Mount 1pc

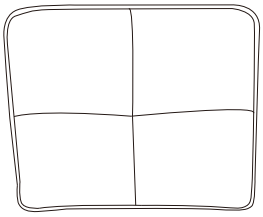

D:Back Cushion 2pcs

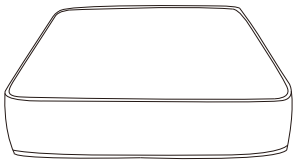

E:Cushion 2pcs

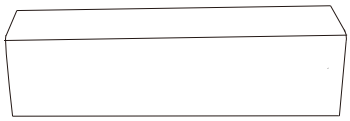

F:Front seat borde 1pc

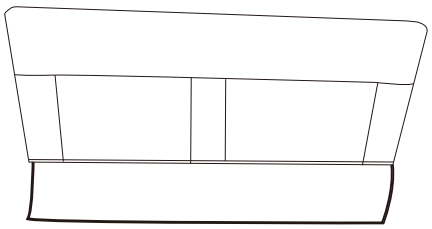

G:Back frame 1pc



H:Shim 4pcs



I:Leg 4pcs

STEP 1: Link (C) with (A) and (B) as shown in the figure.

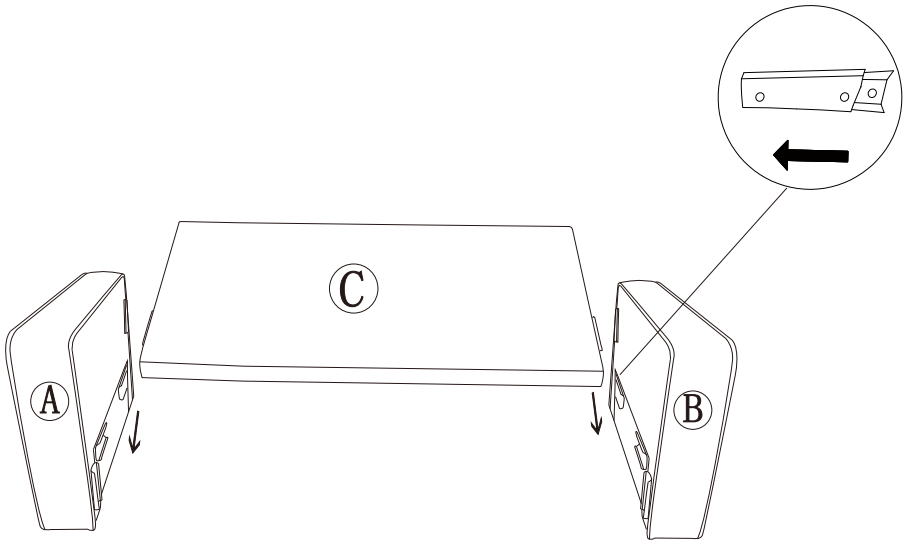

STEP 2：Link (F) with (A) and (B) as shown in the figure.

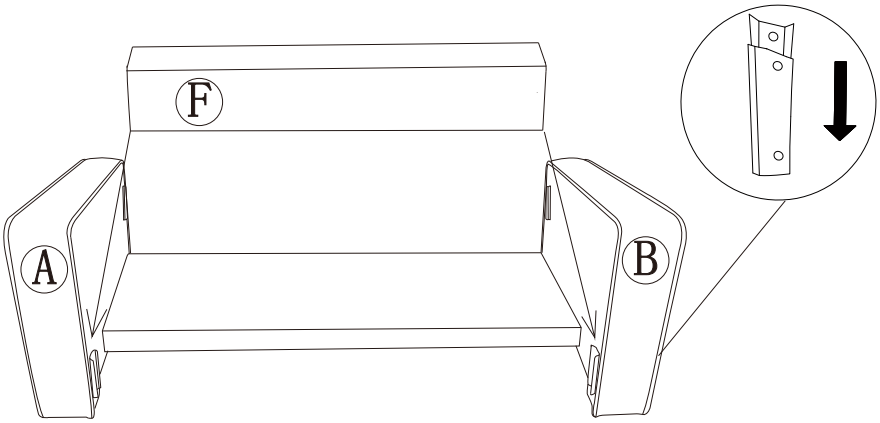

STEP 3：Place the sofa and install the sofa legs as shown in the picture

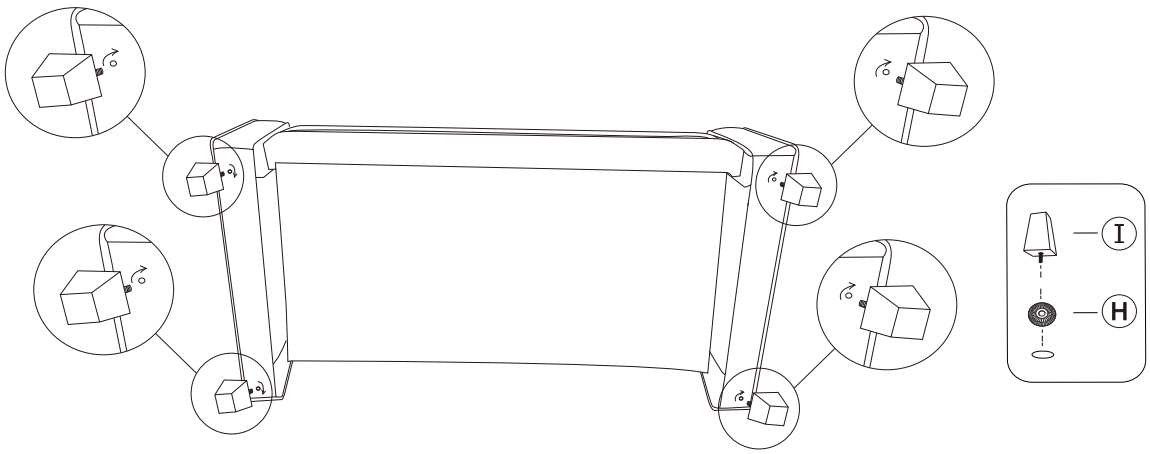

STEP 4: Link (G) with (A) and (B) as shown in the figure
Note: Connect the Velcro under (G) to (C).

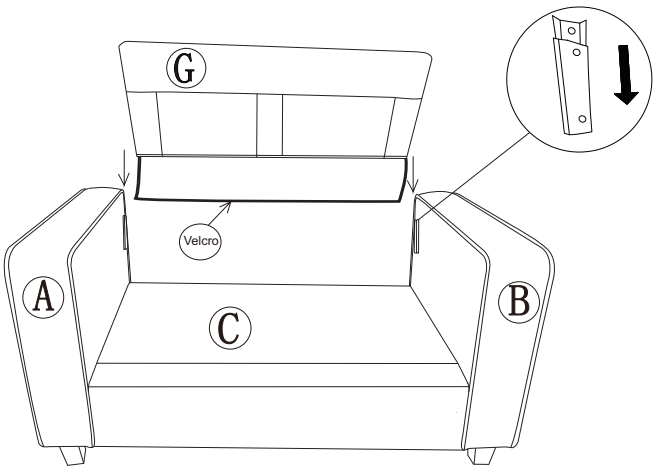

STEP 5: Place (D) and (E) on the sofa as shown in the picture.

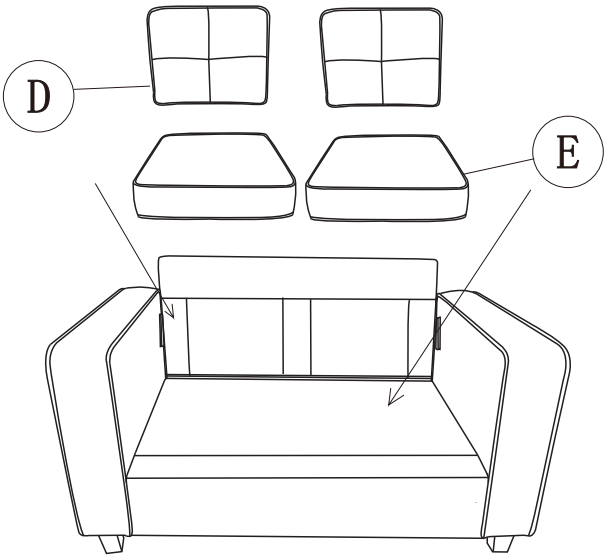

Finish

