# ASSEMBLY INSTRUCTIONS

## GROUP No.: 28170 AINSLEY OCC
## ITEM No.: 28173 TABLE,3-PACK ONLY

**Read instructions carefully prior to assembly.**
Thank you for purchasing this quality product. Check carefully for small parts which may come loose during shipment.Remove all components from pack and place top down on soft surface such as carpet or cloth to prevent scratching the finish. Identify and count all parts as specified below.
**It is recommended to use two or more persons during the assembly process.**

Hardware List For Cocktail Table

| No. | Description | Sketch | Size | Q.ty |
|---|---|---|---|---|
| 1 | Allen Key | | M4x58x23 | 1 pc |
| 2 | Allen Bolt | | 1/4 x 16mm | 8 pcs |
| 3 | Allen Bolt | | 1/4 x 40mm | 10 pcs |
| 4 | Spring Washer | | 1/4 x Ø12 x 1mm | 18 pcs |
| 5 | Flat Washer | | 1/4 x Ø16 x 2mm | 18 pcs |

Parts List

| No. | Description | Sketch | Q.ty |
|---|---|---|---|
| A | Cocktail Table top | | 1 pc |
| B | Cocktail Legs Frame | | 2 pcs |
| C | Cocktail Bottom Panel | | 1 pc |
| D | Cocktail Apron | | 2 pcs |

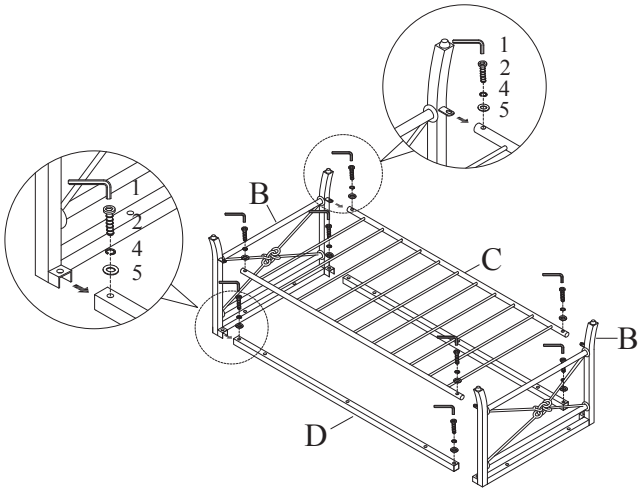


Step 1: Attach two Legs Frame(B) to the Apron(D) and Bottom Panel(C) by using Flat Washer(5),Spring Washer(4), Bolt(2) and Allen Key(1). DO NOT fully tighen the bolts.

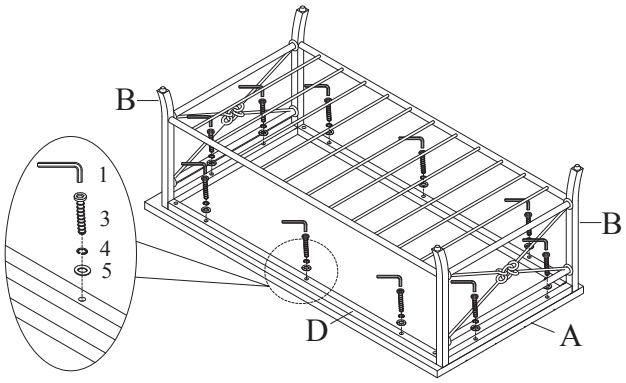


Step 2: Place Table Top(A) on a flat,soft surface such as a carpet or a cloth to prevent scratching the table finish. Attach the Metal group to the Table Top(A) by using Flat Washer(5),Spring Washer(4), Bolt(3) and Allen Key(1).

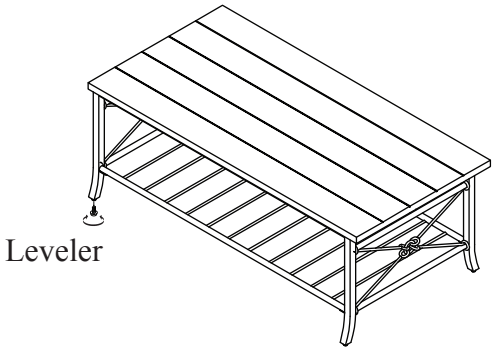


Step 3: Turn over the table and tighten all bolts carefully. Assembly is completed. If levelling is necessary, adjust the levelers turn clockwise or counter clockwise.

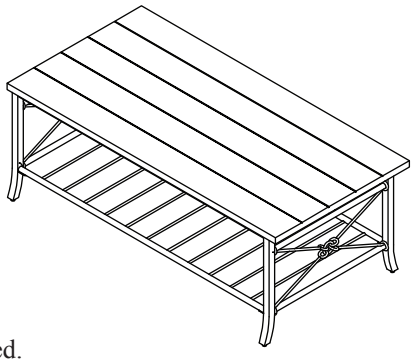

Step 4: Completed.

Cleaning instructions: Clean using soft cloth

Made in China

# ASSEMBLY INSTRUCTIONS

## GROUP No.: 28170 AINSLEY OCC
## ITEM No.: 28173 TABLE,3-PACK ONLY

**Read instructions carefully prior to assembly.**
Thank you for purchasing this quality product. Check carefully for small parts which may come loose during shipment.Remove all components from pack and place top down on soft surface such as carpet or cloth to prevent scratching the finish. Identify and count all parts as specified below.
**It is recommended to use two or more persons during the assembly process.**

Hardware List For End Table

| No. | Description | Sketch | Size | Q.ty |
|---|---|---|---|---|
| 1 | Allen Key | | M4x58x23 | 1 pc |
| 2 | Allen Bolt | | 1/4 x 16mm | 8 pcs |
| 3 | Allen Bolt | | 1/4 x 40mm | 6 pcs |
| 4 | Spring Washer | | 1/4 x Ø12 x 1mm | 14 pcs |
| 5 | Flat Washer | | 1/4 x Ø16 x 2mm | 14 pcs |

Parts List

| No. | Description | Sketch | Q.ty |
|---|---|---|---|
| A | End Table top | | 1 pc |
| B | End Legs Frame | | 2 pcs |
| C | End Bottom Panel | | 1 pc |
| D | End Apron | | 2 pcs |

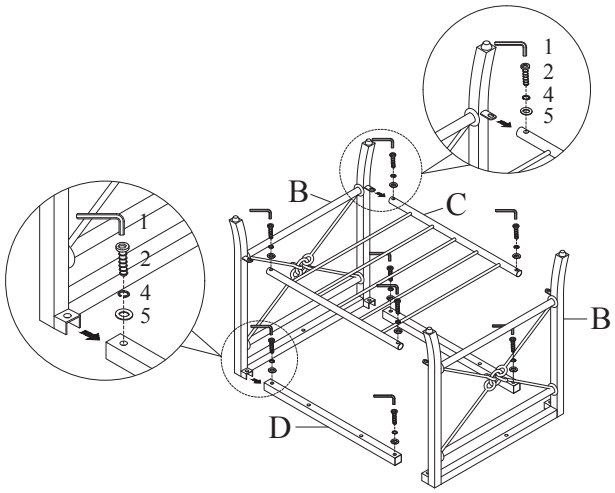


Step 1: Attach two Legs Frame(B) to the Apron(D) and Bottom Panel(C) by using Flat Washer(5),Spring Washer(4), Bolt(2) and Allen Key(1). DO NOT fully tighen the bolts.

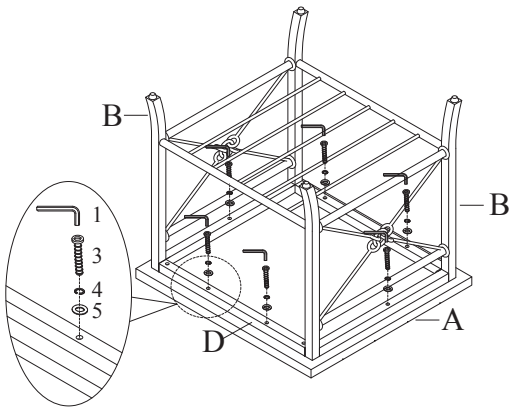


Step 2: Place Table Top(A) on a flat,soft surface such as a carpet or a cloth to prevent scratching the table finish. Attach the Metal group to the Table Top(A) by using Flat Washer(5),Spring Washer(4), Bolt(3) and Allen Key(1).

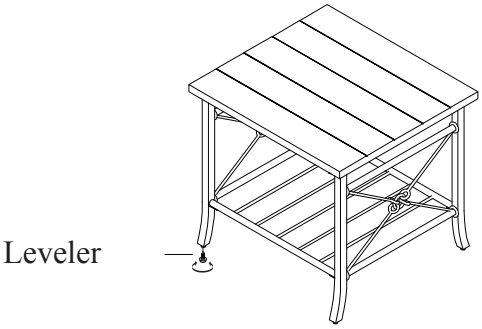


Step 3: Turn over the table and tighten all bolts carefully. Assembly is completed. If levelling is necessary, adjust the levelers turn clockwise or counter clockwise.

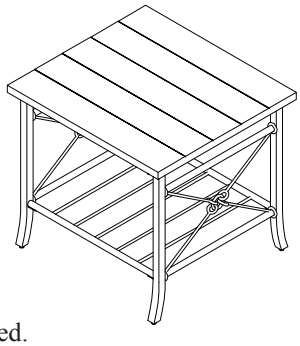

Step 4: Completed.

Cleaning instructions: Clean using soft cloth

Made in China