Autodesk

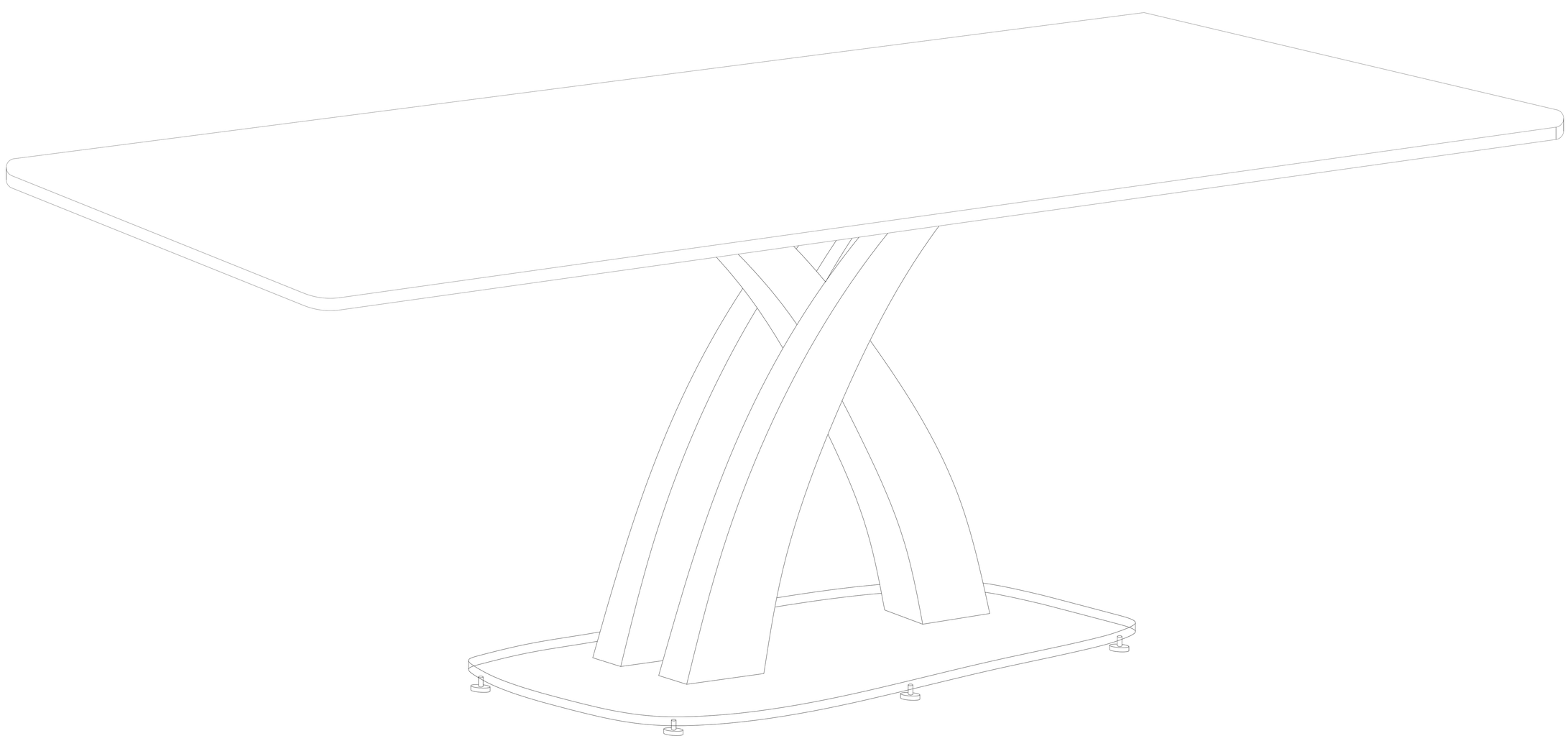

Dining Table

Notice:
1.Follow the installation instructions. Please confirm all accessories are preset beforeinstallation.
2. Do not fully tighten the screws during initial assembly. Fully tighten screws only onceall pieces which are correctly assembled.
3. If you encounter any problems during installation, please contact our customer service
4. Please unbox the item from the side with an open-label and put a carpeton the floor to avoid scratching it.

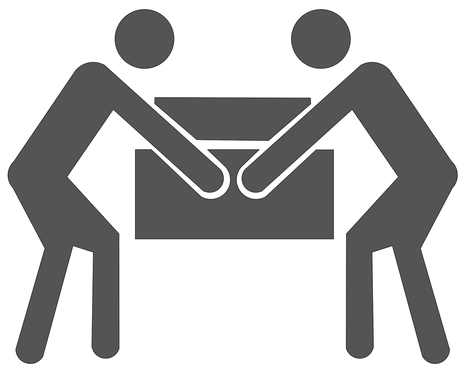

Recommendedinstallers:2

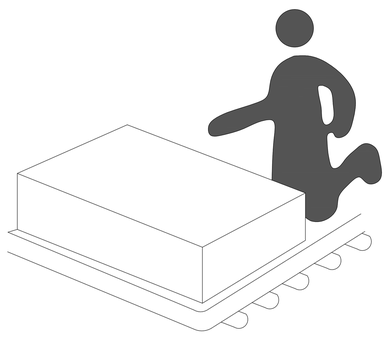

Put a carpet on the floor before unpacking

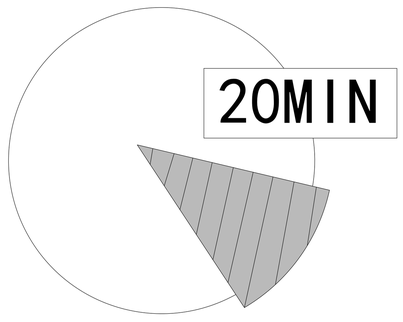

Estimate installation time: 20 minutes

Item mo.	Reference Image	Qty
A		x1
B	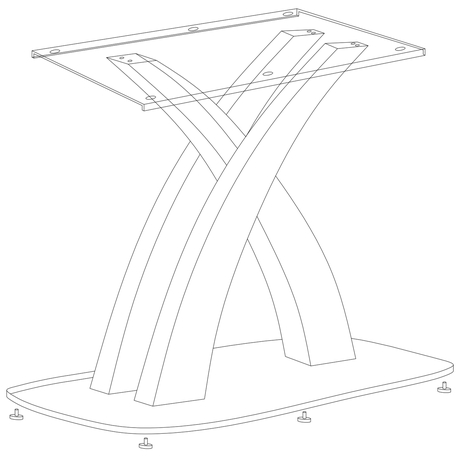	x1
C	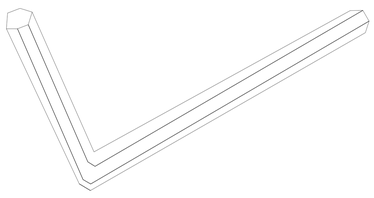	x1

Item mo.	Reference Image	Qty
①	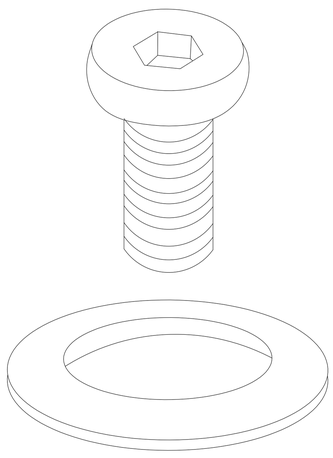	x6
②	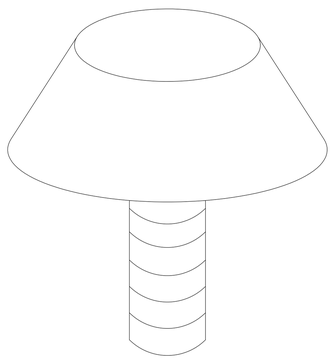	x6

Autodesk

1

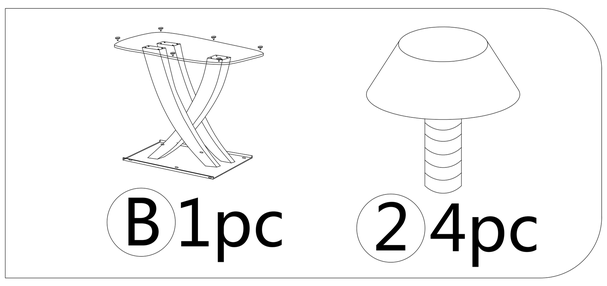

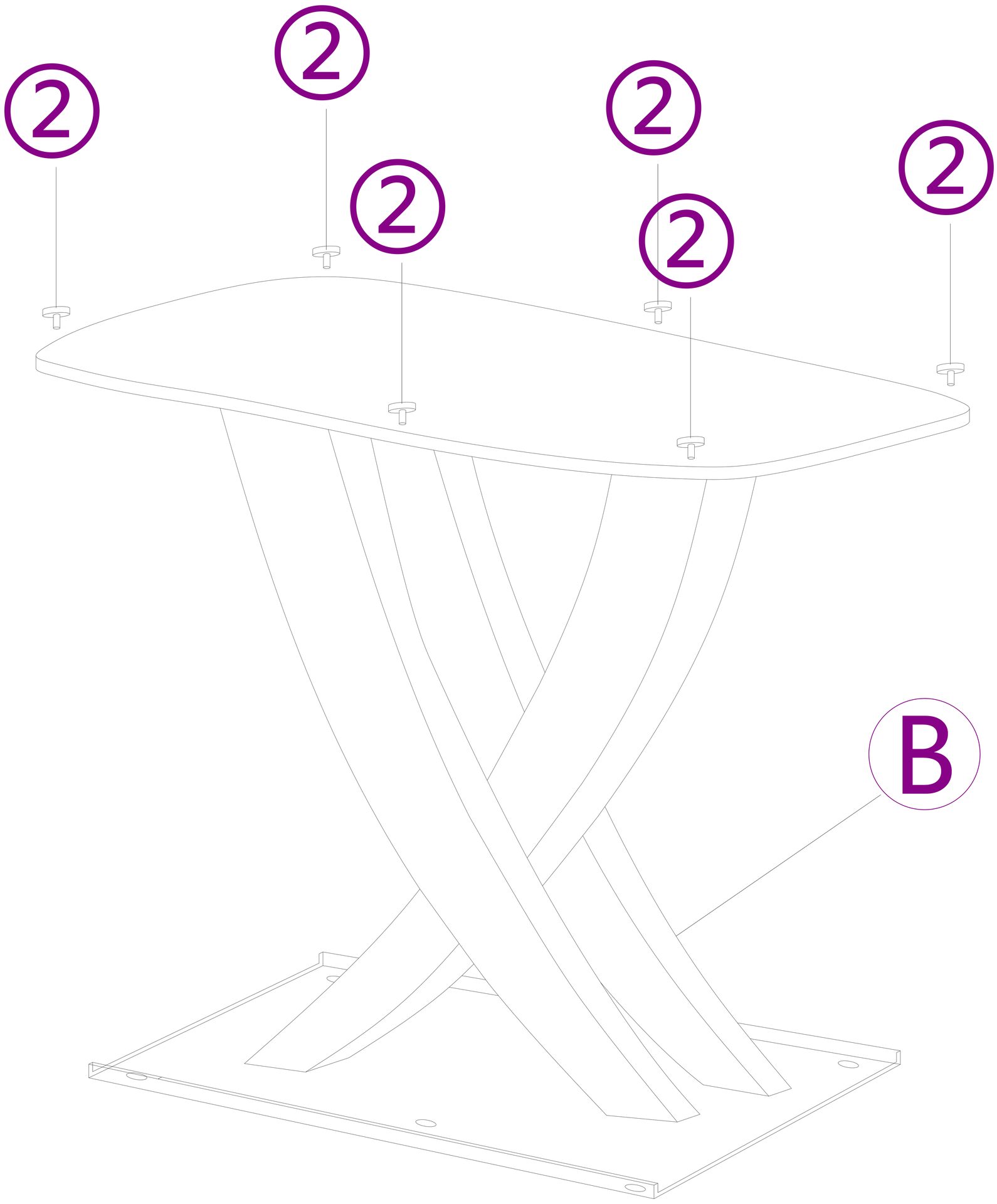

Autodesk

Autodesk

2

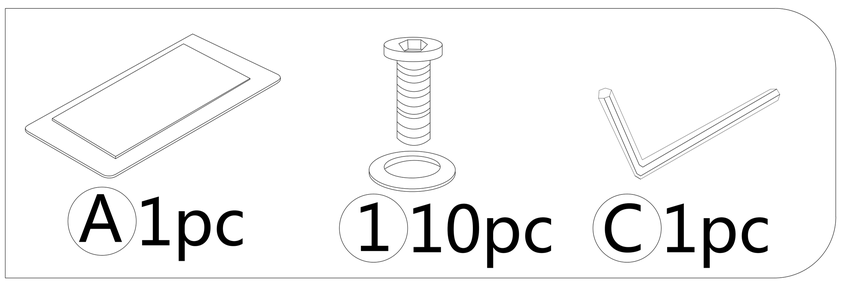

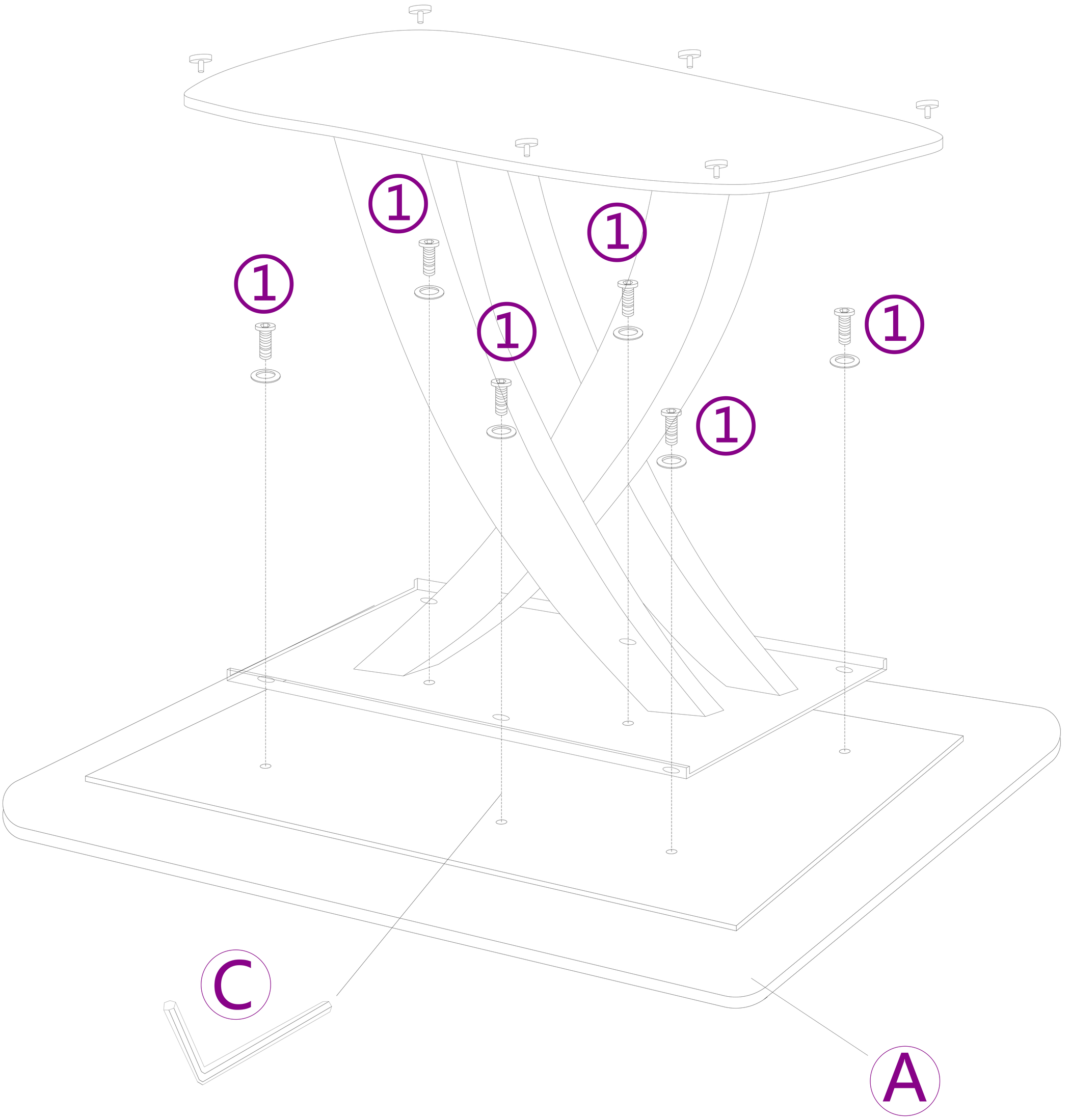

Autodesk

Autodesk

3

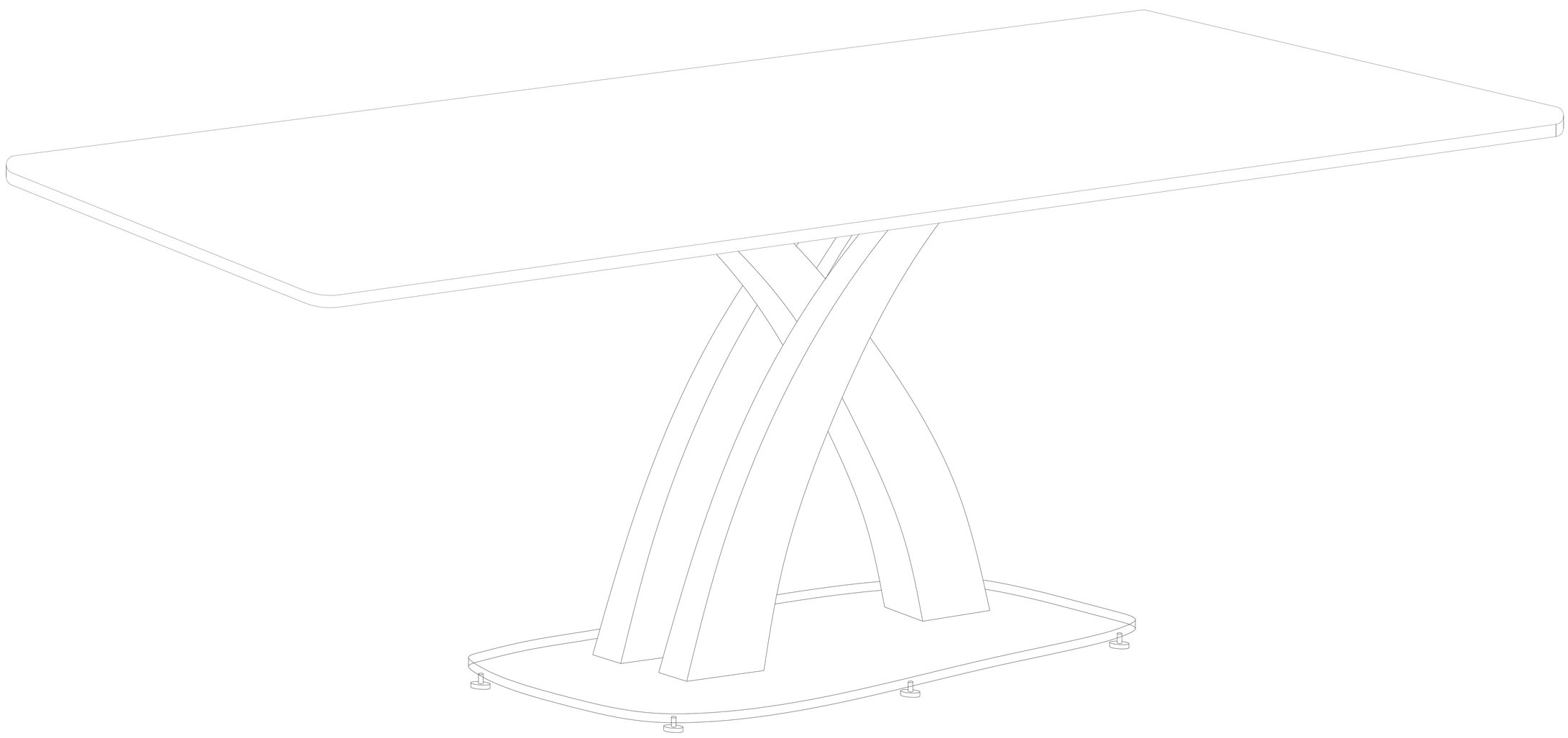

Installlation Completed