LACAVA

CIGNO

built-in pressure balanced progressive mixer w/3-way diverter

15PBP3.C.S

Specifications:

Installation:	built-in wall mount
Exterior Dimensions:	W: 5 1/8” H: 7 1/4”
Material:	solid brass construction with progressive ceramic cartridge and 3-way diverter cartridge
Water use:	4.2 GPM (43.5 PSI)
Finishes:	CR - polished chrome PN - polished nickel NI - brushed nickel BG - brushed gold 44 - matte black
Fittings included:	Rough-in # VPBP3 and trim # 15PBP3.C.S-A
Tile opening max size:	W: 4” H: 5 3/4”

Features:

- unibody pressure balancing progressive valve with 3-way diverter and OFF function
- trim sold separately
- lever handles and rectangular backplate
- 3-way diverter valve with 360º rotating angle
- anti-scald protection & temperature regulation for flow rates as low as 1.75 GPM
- screwdriver service stops
- finished wall must be flush with mudguard as marked
- 1/2” Male NPT inlets & outlets, optional sweat connection
- 1” extension kit available

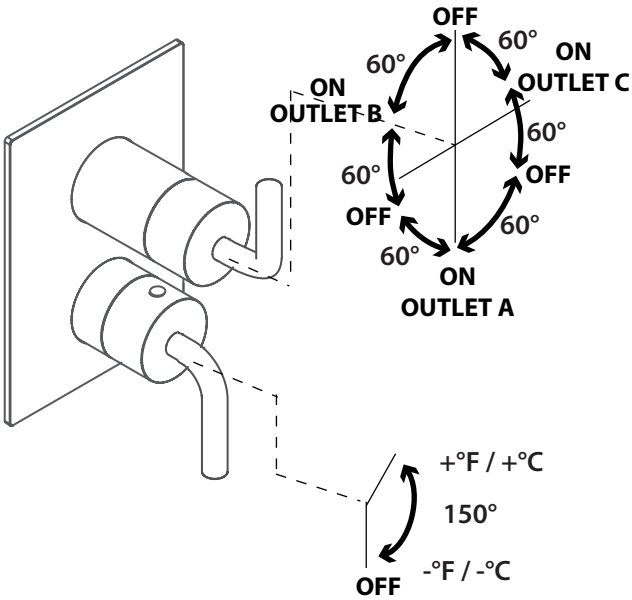

Codes + Standards:

- Meets and exceeds applicable national codes
  - ASME A112.18.1/CSA B125.1
  - ASSE 1016/ASME A112.1016/CSA B125.16
- CAL-Green compliant

ADA compliant when installed to specific requirements of this regulation

Recommended Items:

- Replacement parts:
  - VPBP3 rough-in
  - 15PBP3.C.S-A trim
  - VPBP-C ceramic cartridge
  - VD3-C- diverter cartridge
  - VPBP3-EX 1” extension kit

LACAVA reserves the right to revise any dimension or information on this sheet without notice. Dimensions are nominal and may vary within an industry accepted tolerance of 1/4”. Drawings provided herein are meant to give the user an idea of the product and are not made to scale. Location of plumbing is meant for reference, your specific application may vary.
Revised: 4/2/2024

LACAVA

CIGNO

built-in pressure balanced progressive mixer
w/3-way diverter

15PBP3.C.S

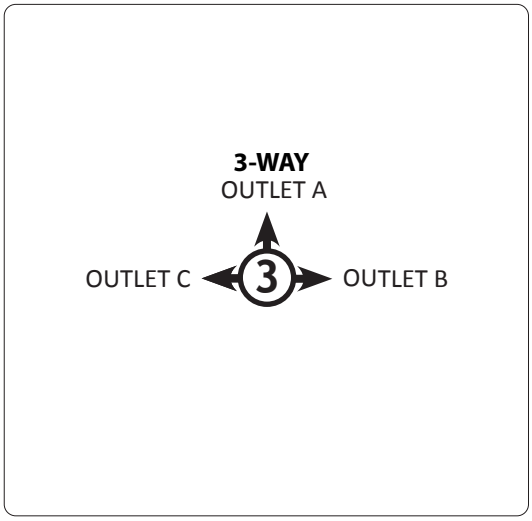

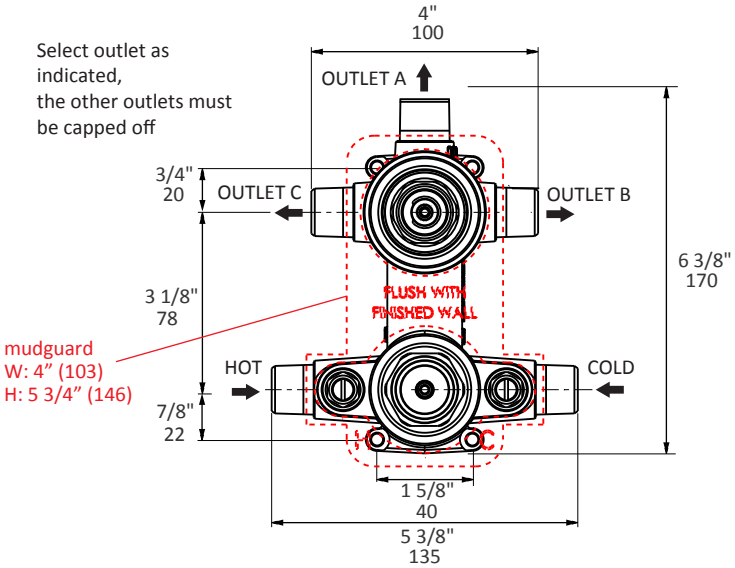

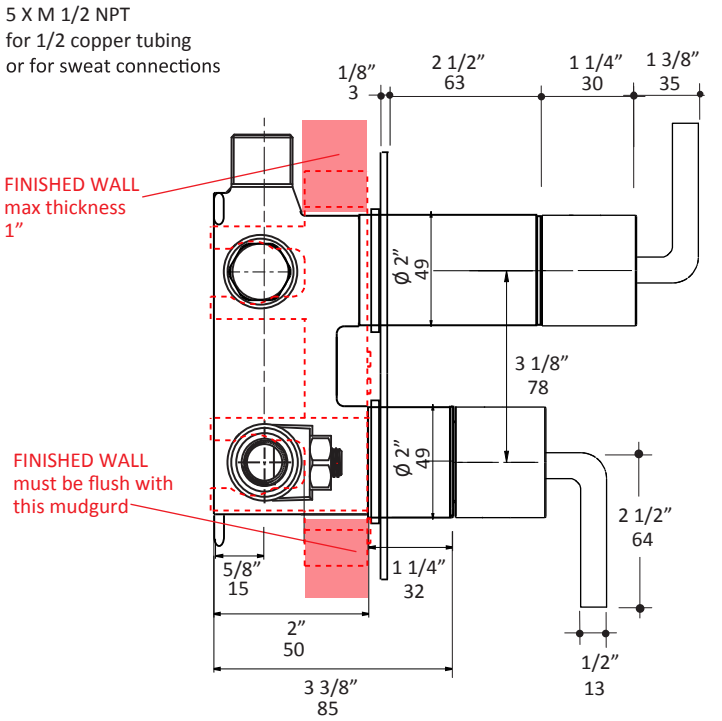

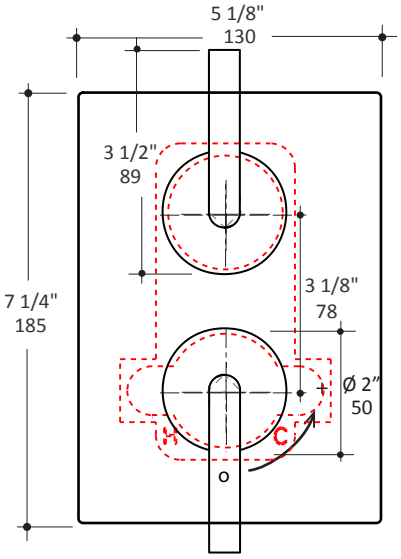

Tile opening max size: 4"W x 5 3/4"H

LACAVA reserves the right to revise any dimension or information on this sheet without notice. Dimensions are nominal and may vary within an industry accepted tolerance of 1/4". Drawings provided herein are meant to give the user an idea of the product and are not made to scale. Location of plumbing is meant for reference, your specific application may vary.
Revised: 4/2/2024