Murphy bed

Assembly Instructions - Please keep for future reference

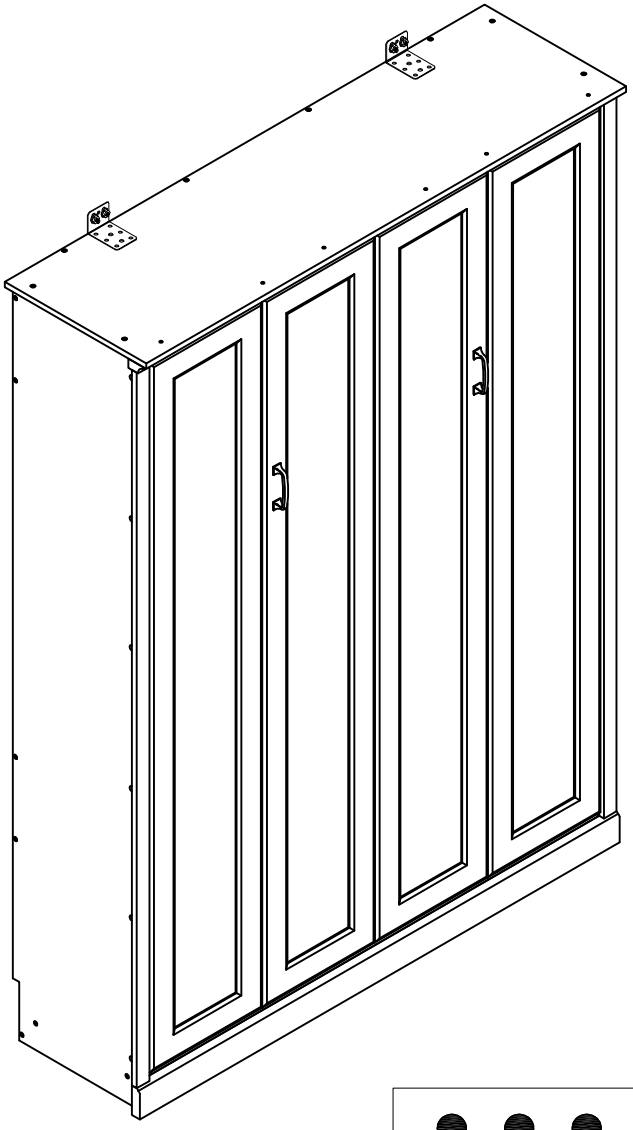

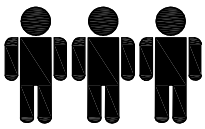

Three people are required to assemble and move this model.

Important – Please read these instructions fully before starting assembly

Part List

Hardware list：WF531469AAK/WF531469AAD

⑨ 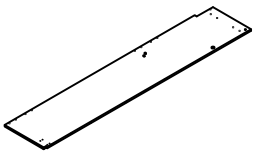 1 PC	⑩ 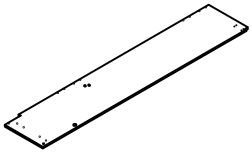 1 PC	⑪ 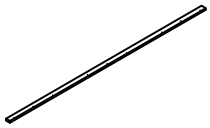 2 PCS	⑫ 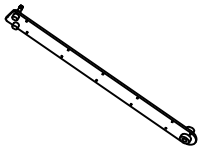 1 PC	⑬ 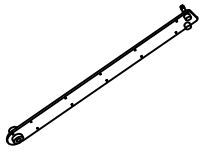 1 PC
⑭ 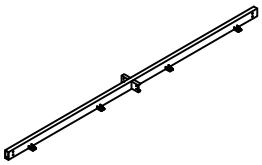 1 PC	⑮ 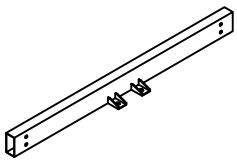 2 PCS	⑯ 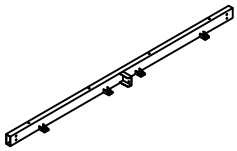 1 PC	⑰ 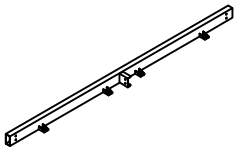 1 PC	⑱ 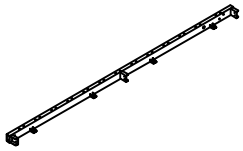 1 PC
⑲ 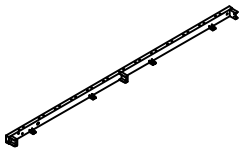 1 PC	⑳ 1 PC	㉑ 1 PC	㉒ 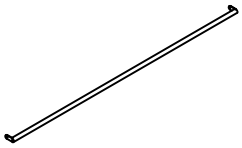 1 PC	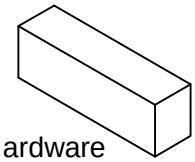 Hardware 1 PC

Part List

WF531470AAK/WF531470AAD

㉓ 1 PC	㉔ 1 PC	㉕ 1 PC	㉖ 1 PC

Part List

WF531471AAK/WF531471AAD

① 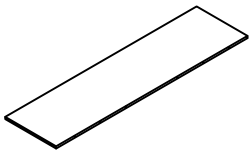 1 PC	② 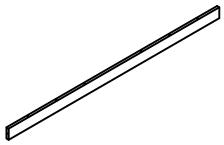 1 PC	③ 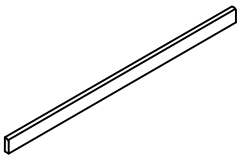 1 PC	④ 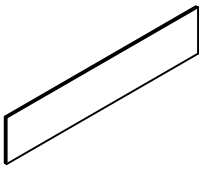 1 PC	⑤ 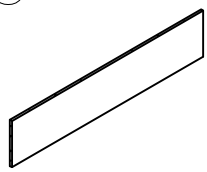 1 PC
⑥ 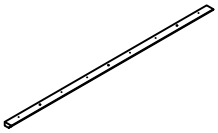 1 PC	⑦ 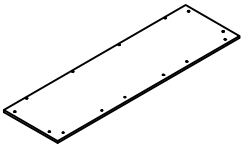 1 PCS	⑧ 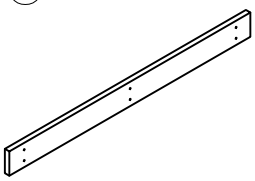 4 PCS	X 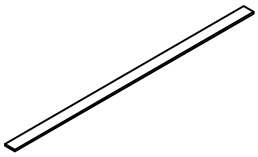 12 PCS	

Assembly Instructions

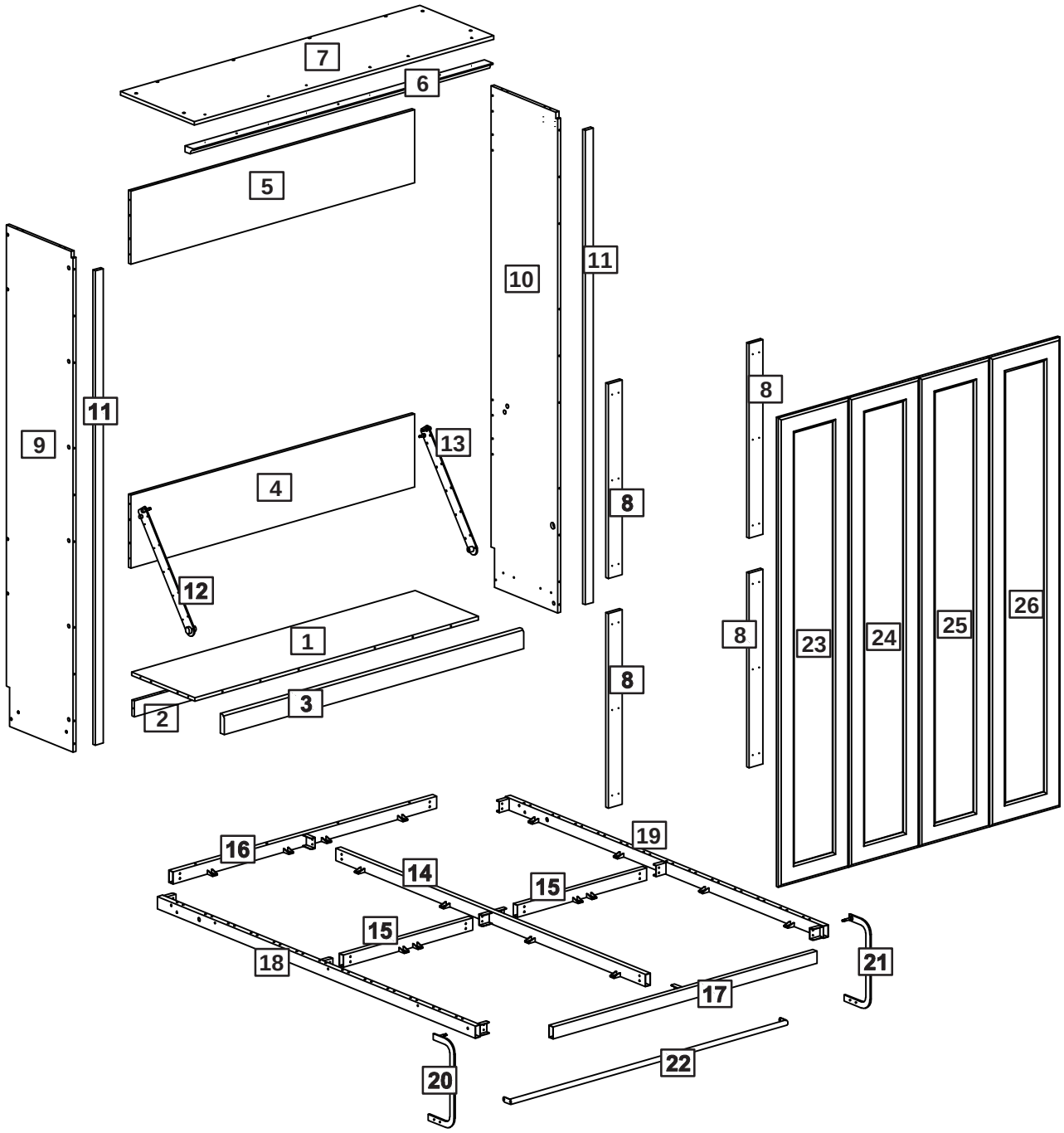

Part List

Hardware list：WF531469AAK/WF531469AAD

Please check you have all the panels listed below

Note: The quantitie below are the correcet amount to complete the assembly. In some cases more fittings may be supplied than are required.

A Male Camlock x 22	B Female Camlock x 22	C Dowel x 31
D 6.8*48mm Screw x 22	E 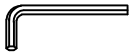 Hex Key M4 x 1	F Magnetic bump x 2
G Expansion screw x 4	H MATTRESS SUPPORT x 2	I Corner code x 2
J 4*16mm Screw x 36	K 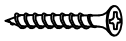 4*30mm Screw x 30	L Ø20 Sticker x 28
M Webbing x 2	N Nylon washer（19*1.5） x 4	O Nut M8 x 8
P 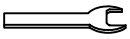 Wrench x 1	Q 6*8mm Screw x 4	R x 2
S Cylinder x 4	T 6*12mm Screw x 48	U 8*45mm Screw x 4
V 6*25mm Screw x 2	W Single plastic cap x 24	X Slat x 12
Y 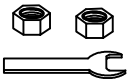 Nut M8 x 1	Z Handle & Fixings x 2	

Tools required

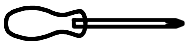

Phillips screwdriver (medium & large)

Handle & Fixings x 2

Ruler - Use this ruler to help correctly identify the screws

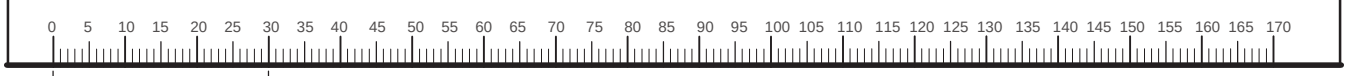

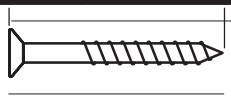

The screws length is measured from the head to the point (30mm screw shown).

Using Camlocks

Step 1

Connect the male camlock as diected in the assembly instructions using a scewdriver.

1

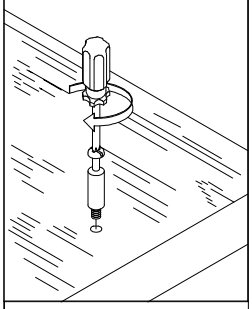

Step 2

Push the male camlock into the entry hole.

2

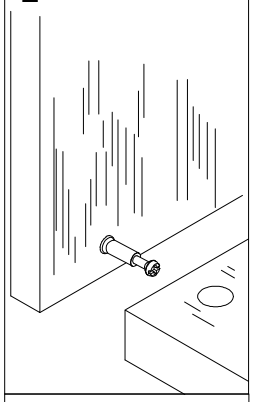

Step 3

Insert the femle camlock as shown in the instruction.

Note：ensure that the arrow on the top of the camlock points towards the entry hole for the male camlock.

3

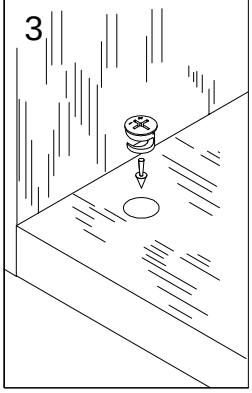

Step 4

Turn the female camlock clockwise with a screwdriver.

You should feel a click when the camlock is locked in place.

The joint is now secure.

4

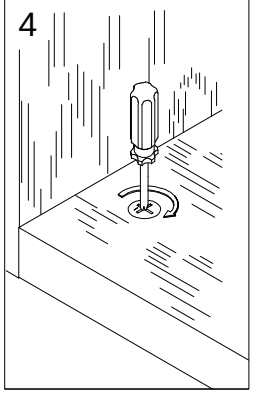

Important information to read before starting the assembly. Keep this information for future reference.

IMPORTANT WARNINGS

Risk of serious injuries if the wall bed tips over.
To prevent wall bed from tipping over, mount it permanently to the wall.
Only a qualified person* must carry out the installation and any possible adjustment of the wall bed (including disassembly). If the wall bed is not firmly mounted (anchored) to the wall, it might tip over and cause serious injuries to the installer, users of the bed as well as the people near the bed.
The choice of wall anchoring depends on the type of wall. Use wall anchors suitable for the wall material.

* Qualified person: it is necessary to have a good understanding of the wall structure where the bed is anchored, including the positioning of the wall studs and structural components in the case of a wood or metal structure. If you do not have the necessary skills, make sure that the installation is done by someone who has the qualifications and required knowledge. When you choose the installer, make sure to comply with all applicable regulations in the province, state or country where the furniture is installed.

IMPORTANT: BEFORE STARTING ASSEMBLY

Be sure to confirm the following information:

1. **The installer has the qualifications * and required knowledge.**
2. **Only wall anchor screws for wood-frame walls are provided with this bed. See anchor requirements and installation notes provided** in the instruction manual, according to the type of wall, and use the appropriate anchors such as described in this manual.
3. Your bed can hold a maximum distributed weight of 1000 lb (455 kg), including the weight of the mattress.
4. Maximum thickness of mattress: 12 in (30.5 cm), and must stand in vertical position without sagging.
5. The bed will not stay open without the weight of the mattress which must be between: 38 lbs (15 kg) and 90 lbs (41 kg).
6. Minimum ceiling height requirements for installation: 83 in (2.11 m).
7. It is recommended to assess the structural integrity of the floor and wall and to make sure that the wall anchoring devices can withstand the forces generated. More specifically, before installing the wall bed, it is necessary to verify that the floor and the wall on which you want to install the bed are flat and have no structural damage that could affect the installation of the wall bed or its anchoring to the wall. Do not install the bed on weakened or rotten structures.
8. It is necessary to ensure that wall anchors of the bed can withstand forces generated. The value of the holding power (Fh) of each anchor should be 630 Newtons (142 lbf).

If the wall bed is not installed properly, the latter might close unexpectedly or could open involuntarily.
In addition, if the wall bed is installed incorrectly, one of its structural components may break and fall off.

Assembly Instructions

Step 1

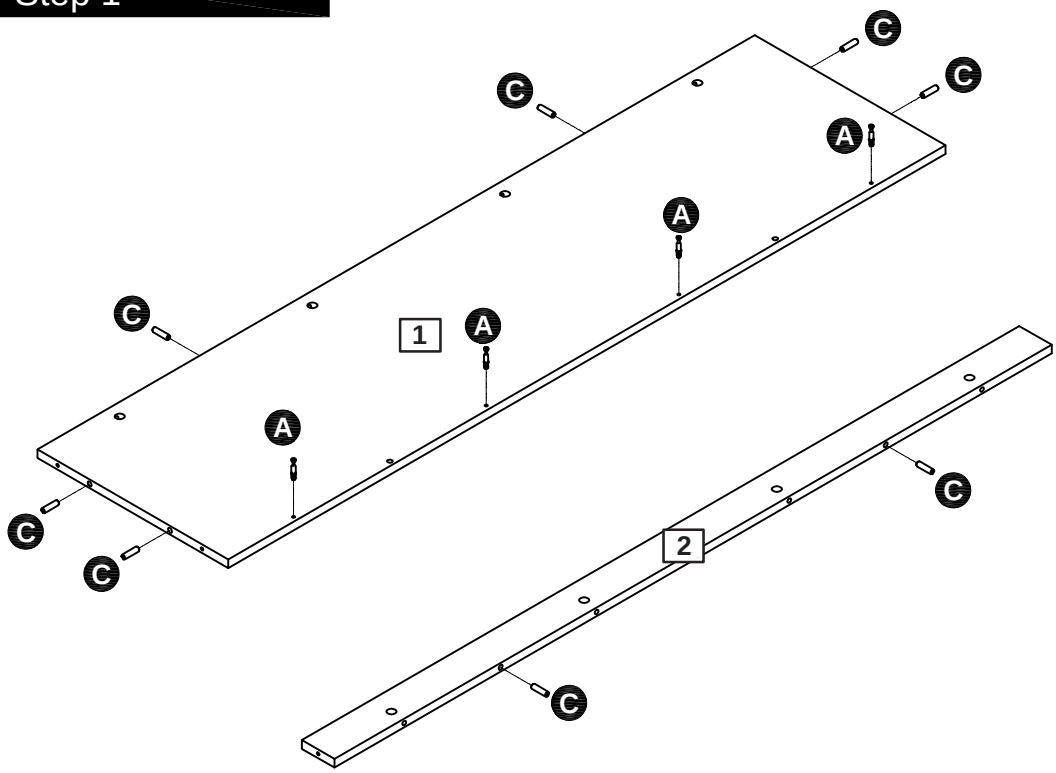

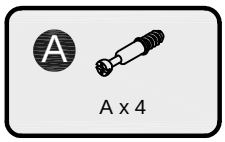

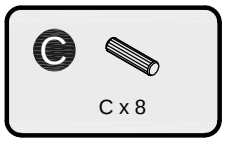

Step 2

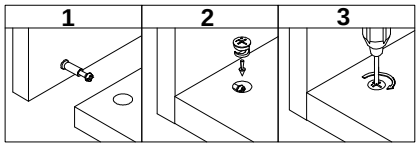

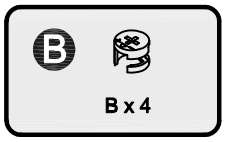

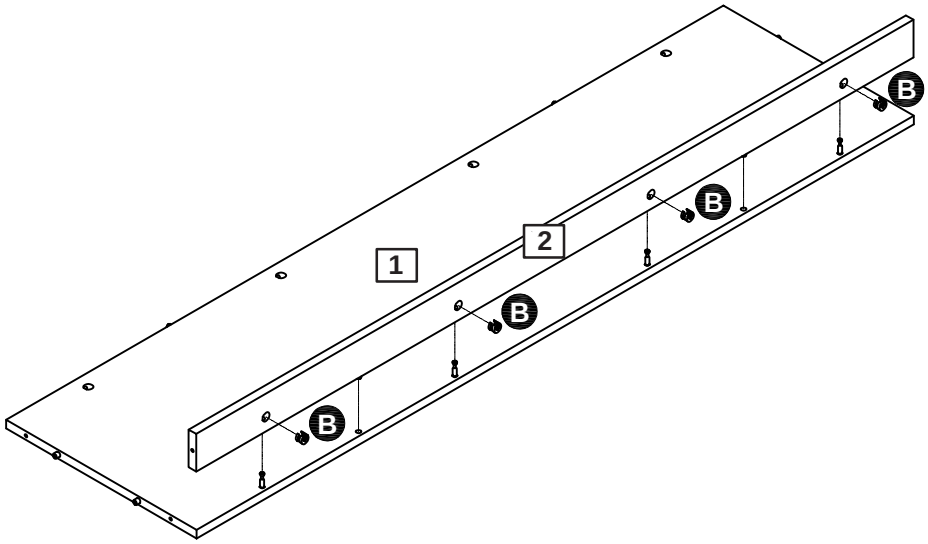

Assembly Instructions

Step 3

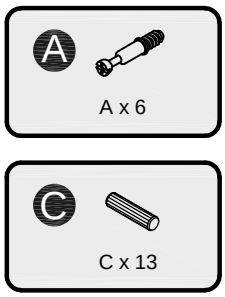

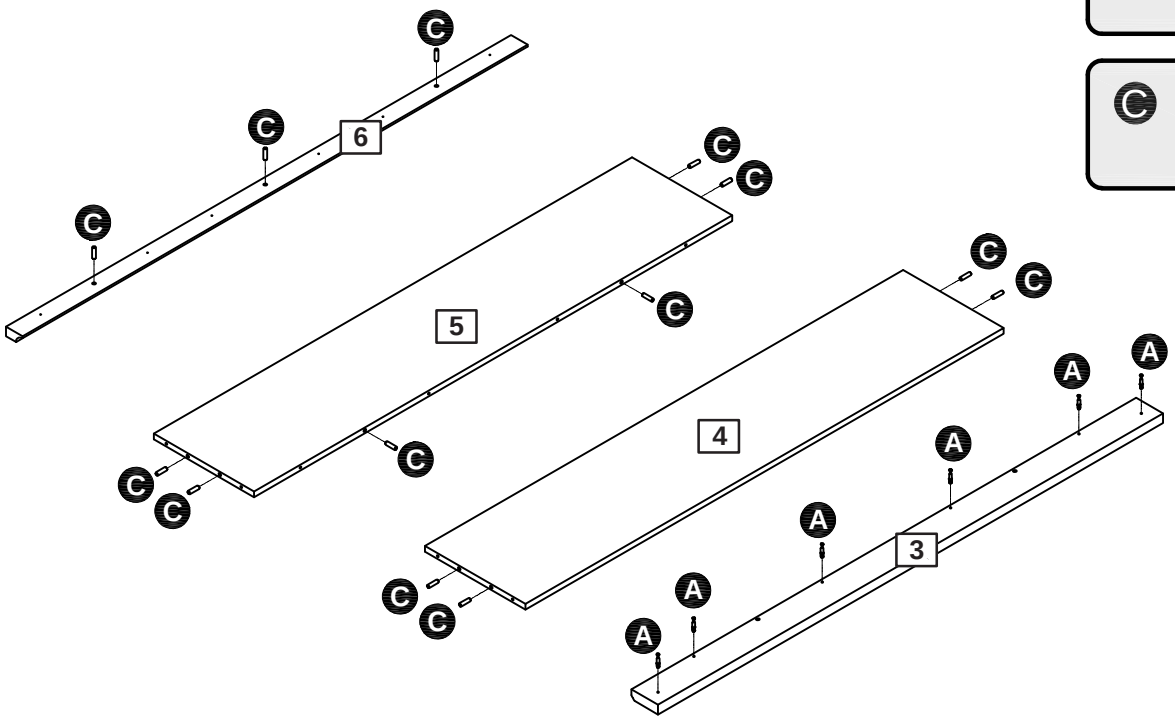

Step 4

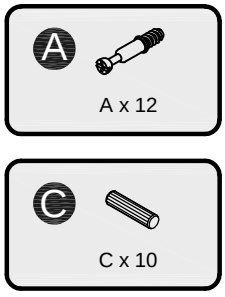

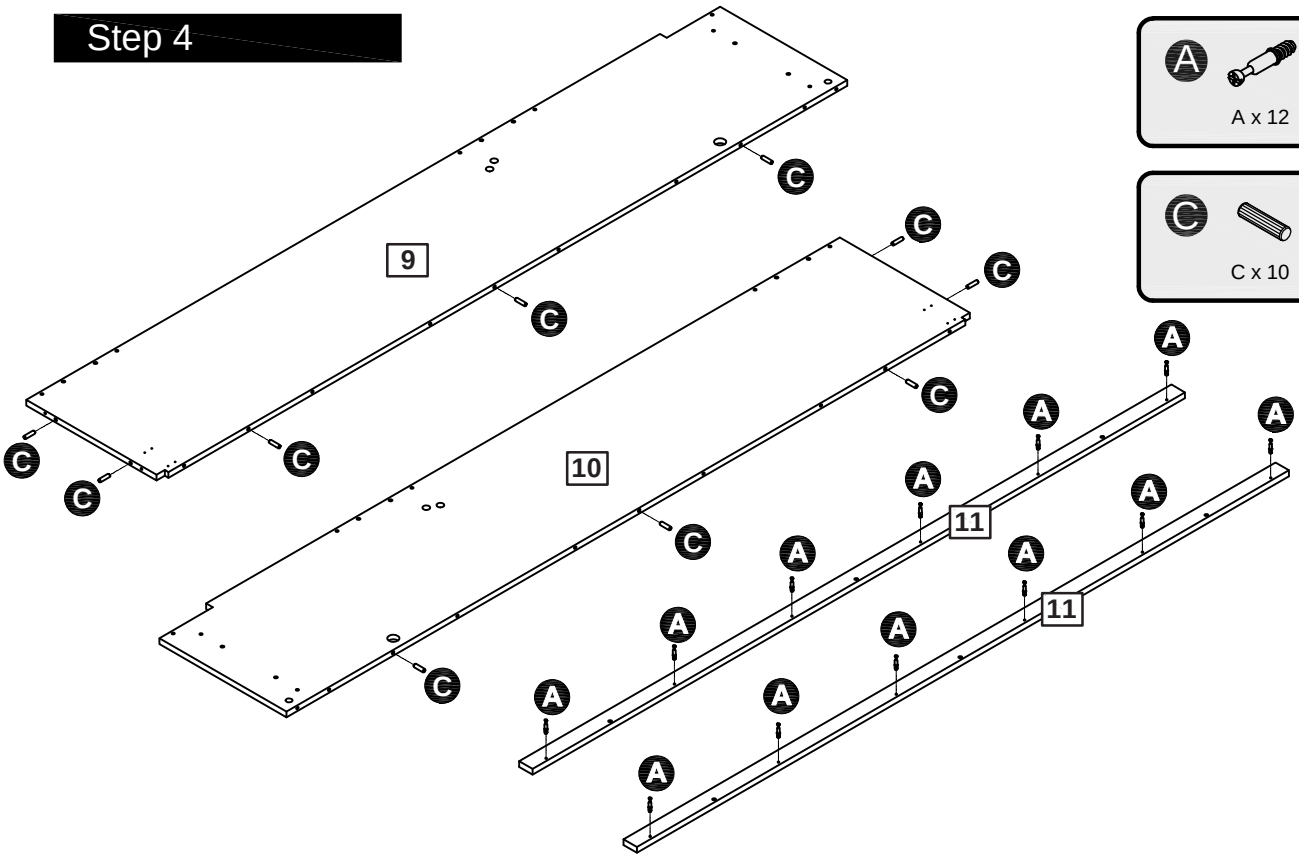

Assembly Instructions

Step 5

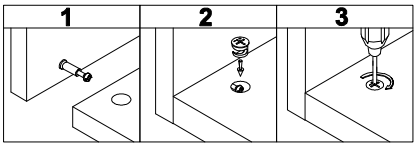

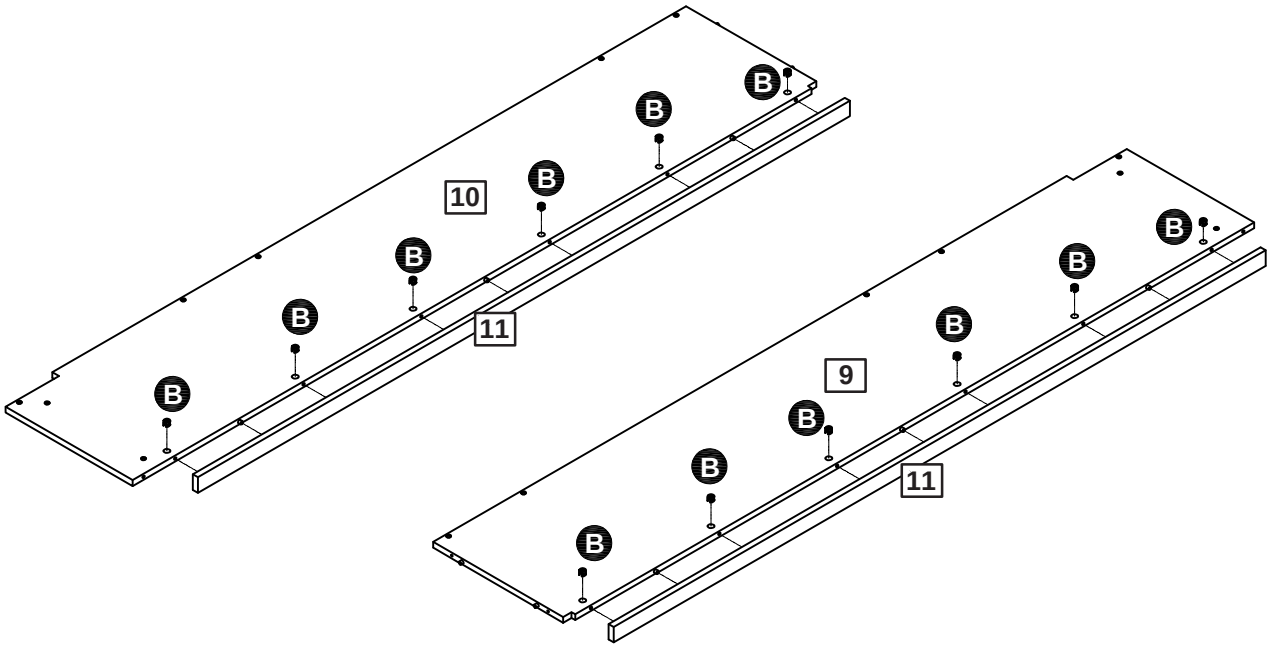

Step 6

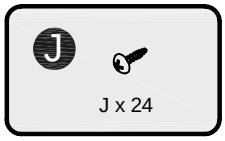

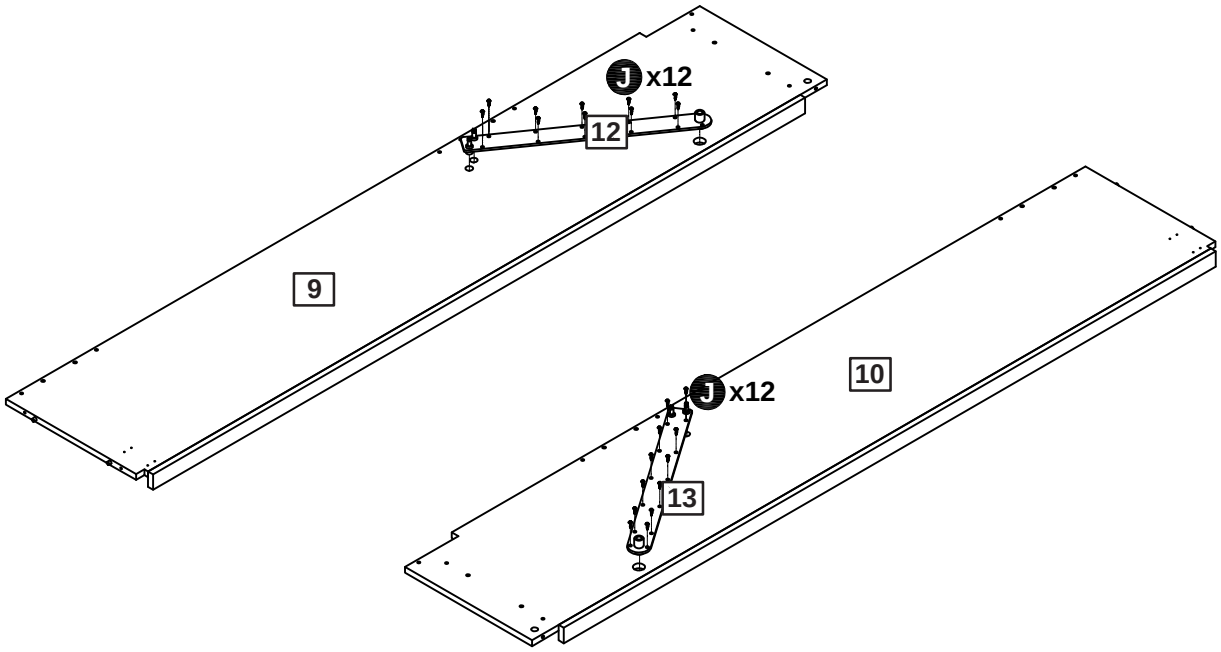

Assembly Instructions

Step 7

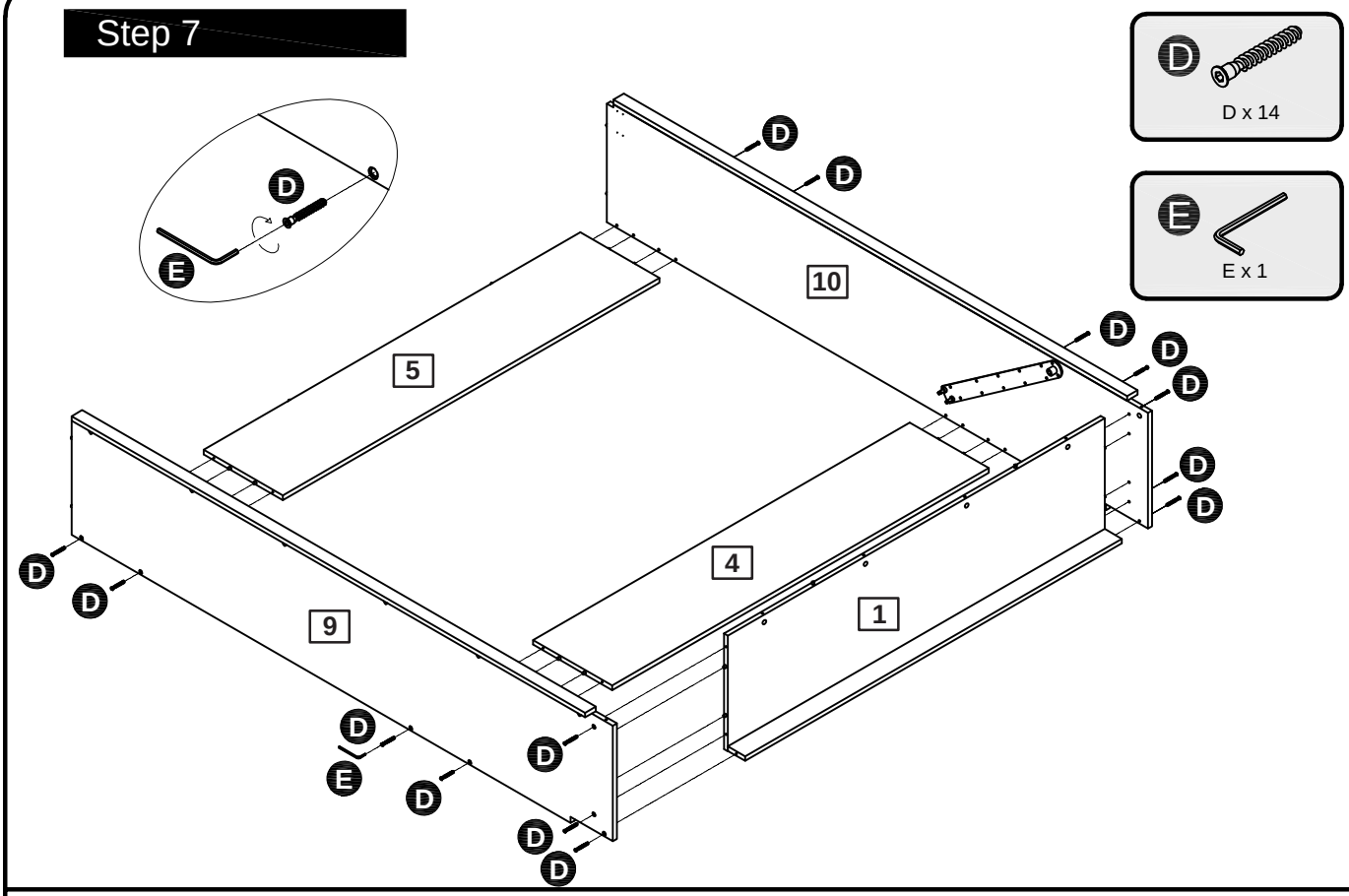

Step 8

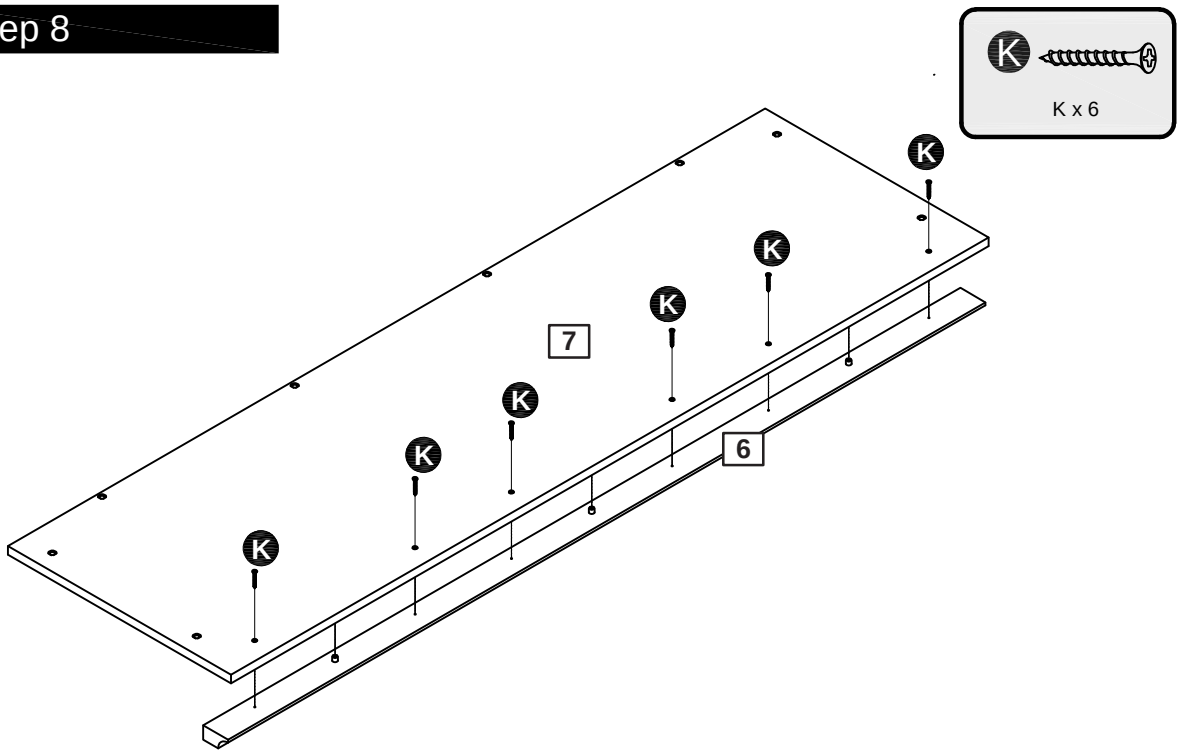

Assembly Instructions

Step 9

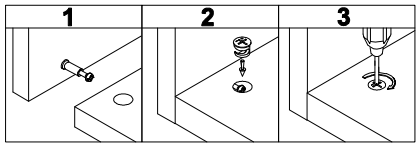

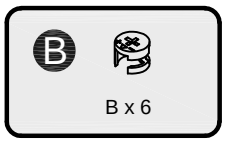

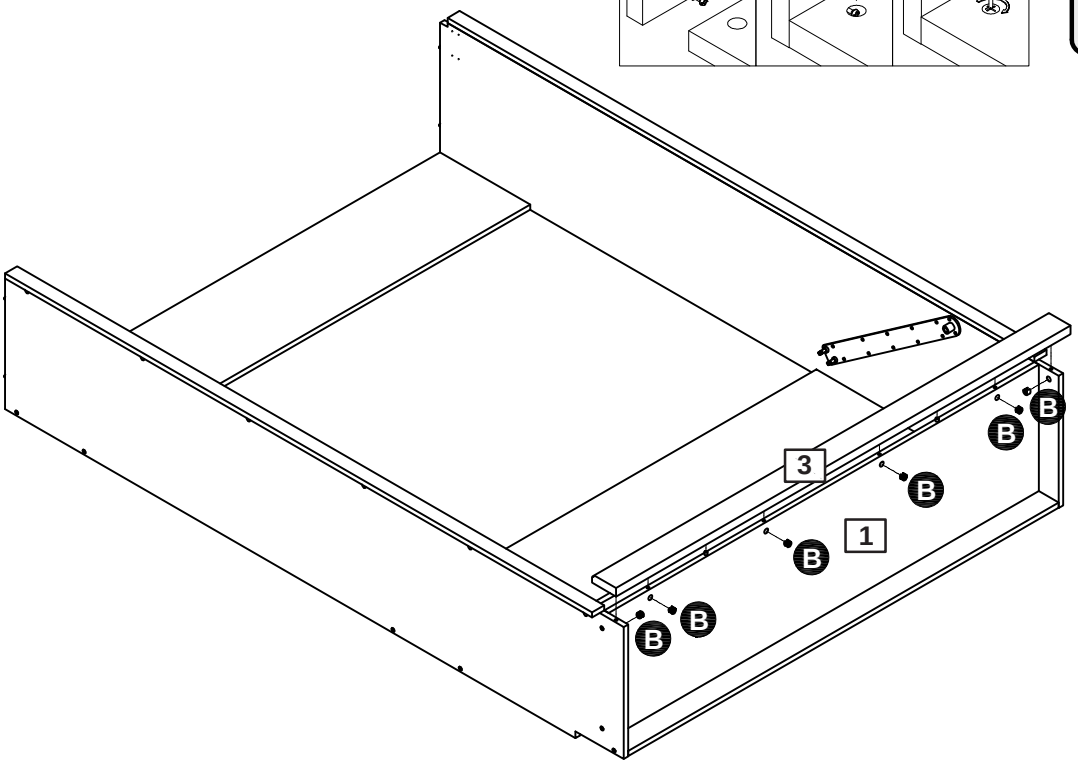

Step 10

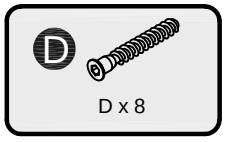

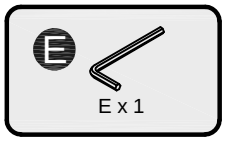

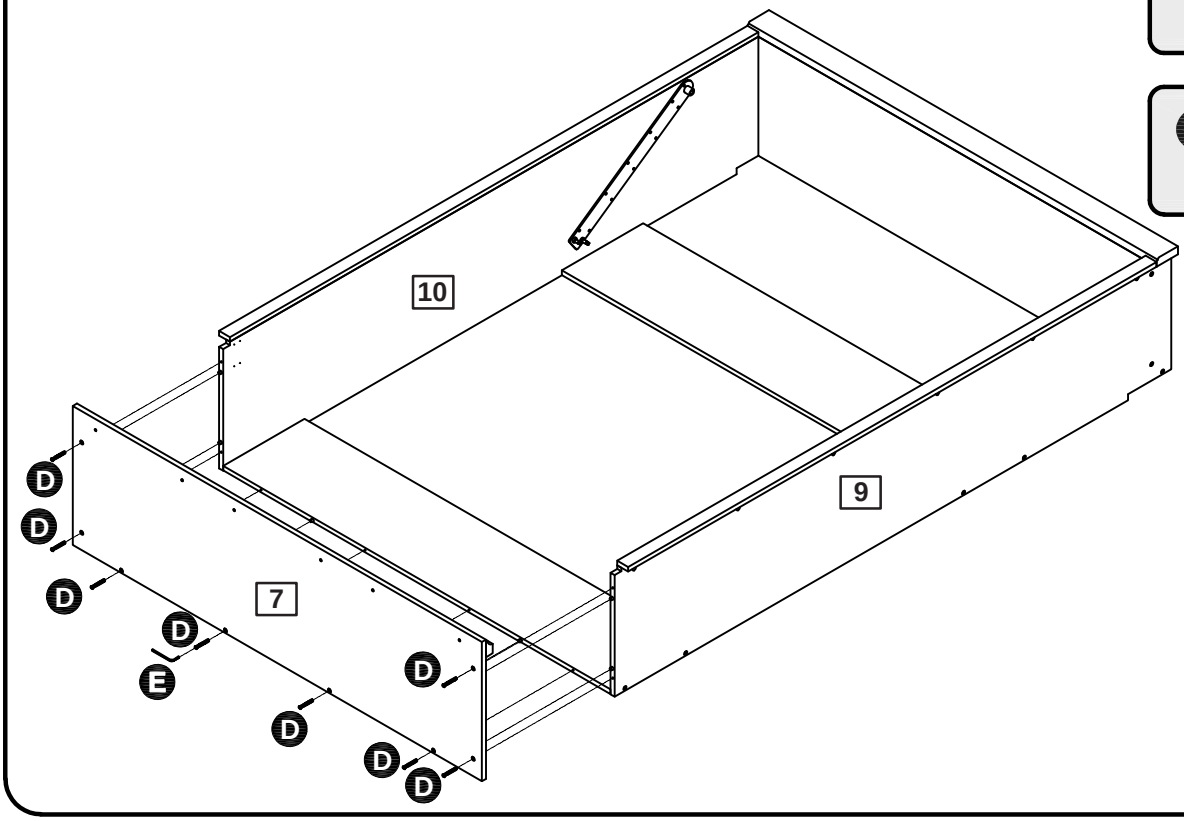

Assembly Instructions

Step 11

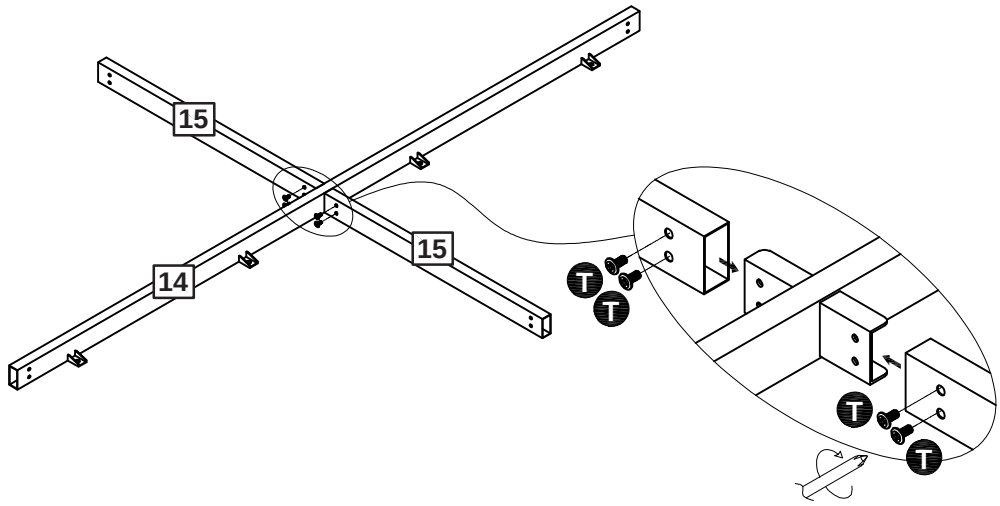

Step 12

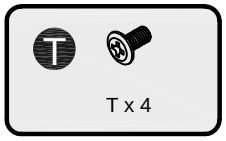

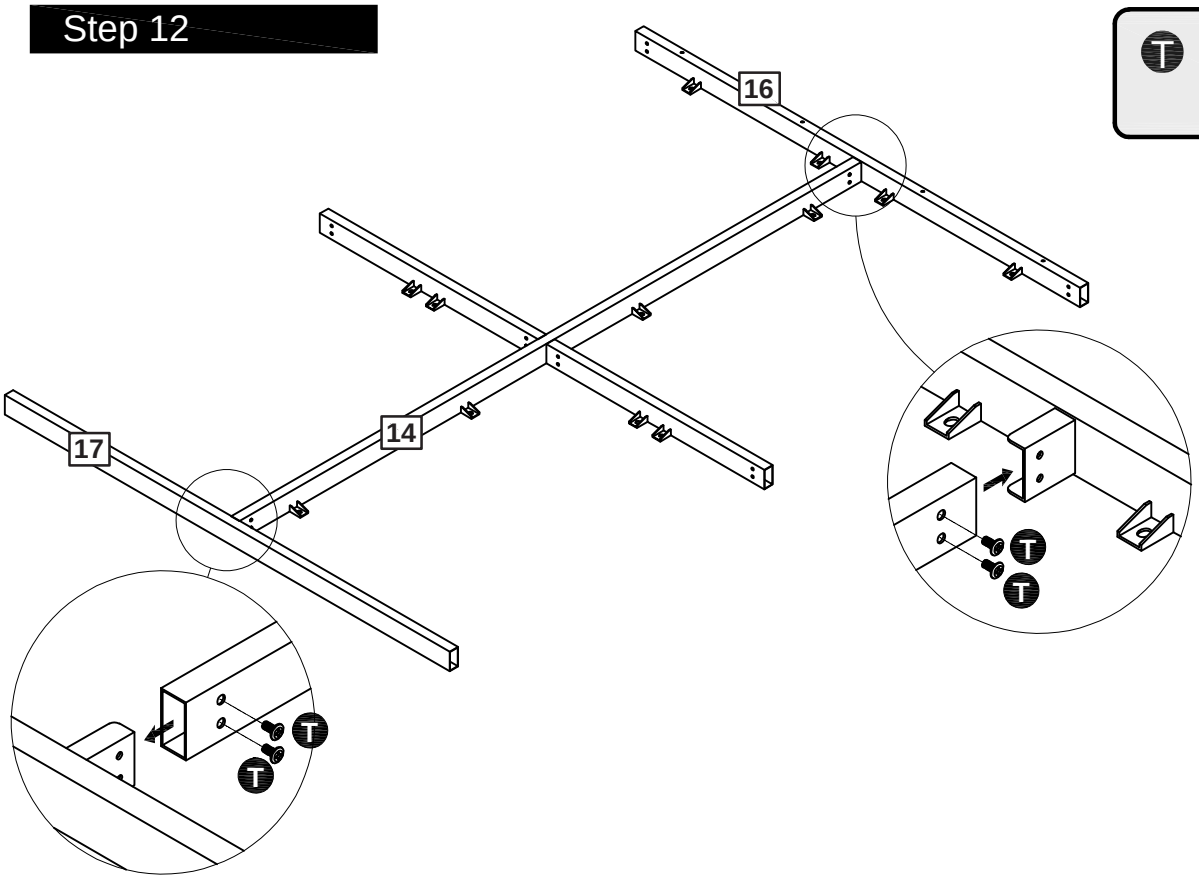

Assembly Instructions

Step 13

make sure the tube with mattress stopper holes is in the head position and the tube without any holes are in the foot part. after you assemble the frame, take the measurement to ensure X=Y

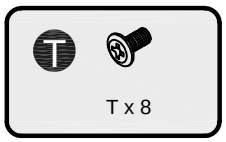

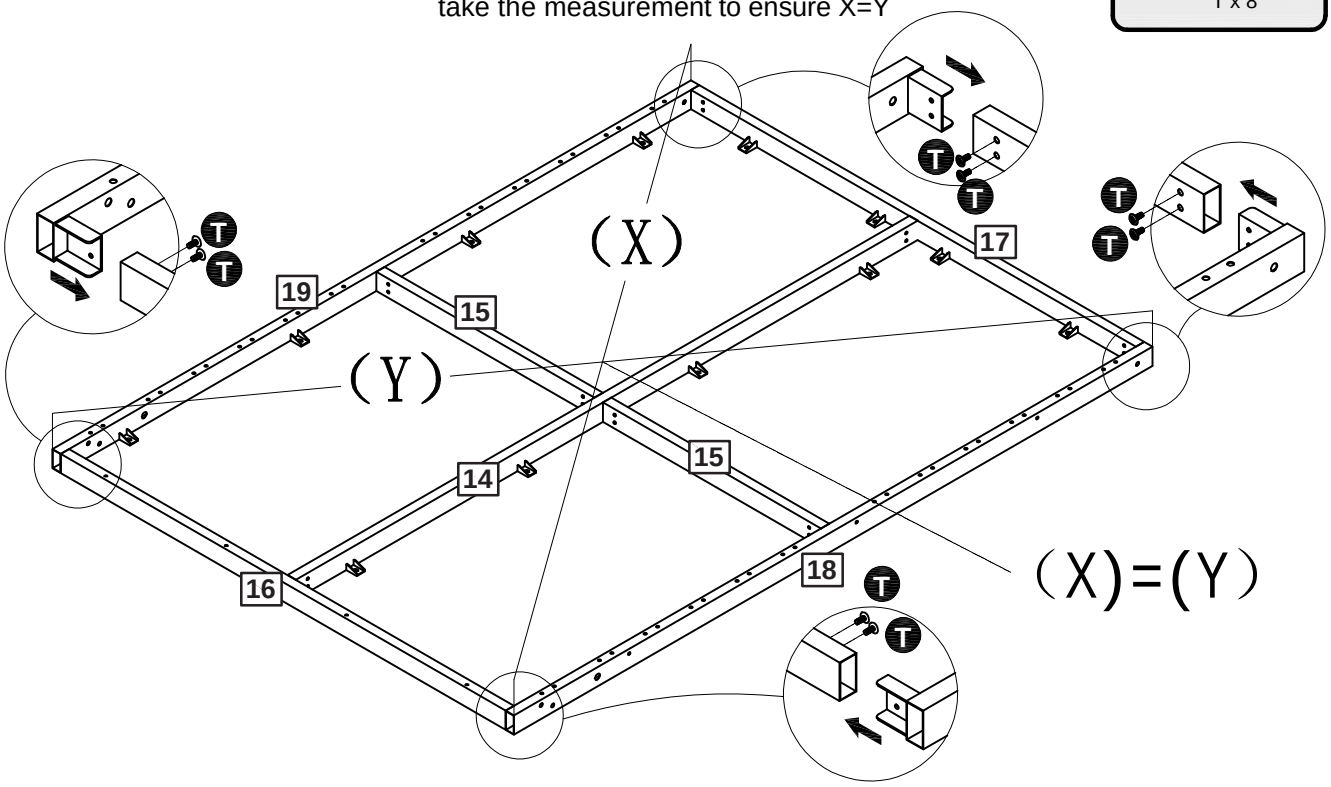

Step 14

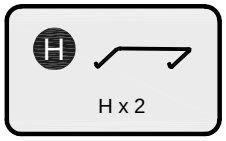

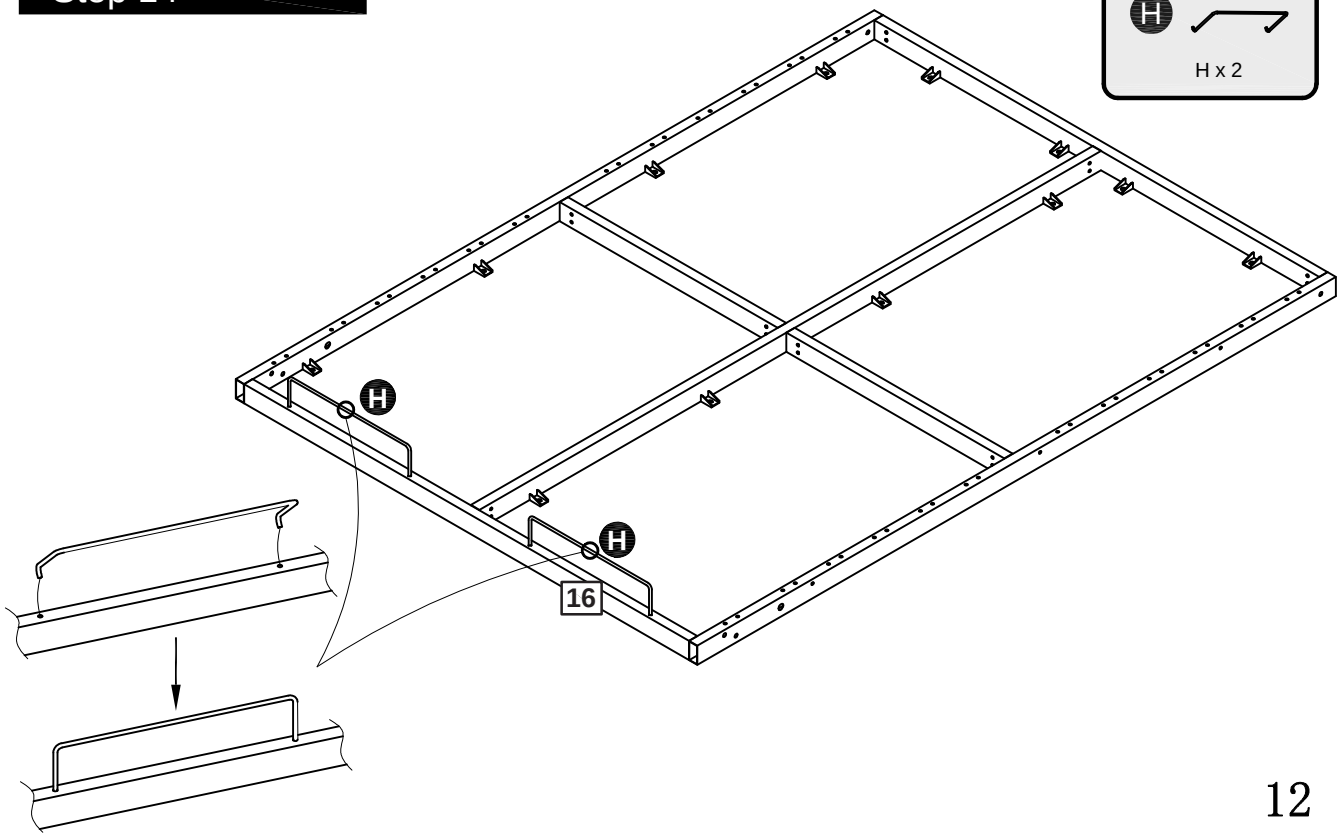

Assembly Instructions

Step 15

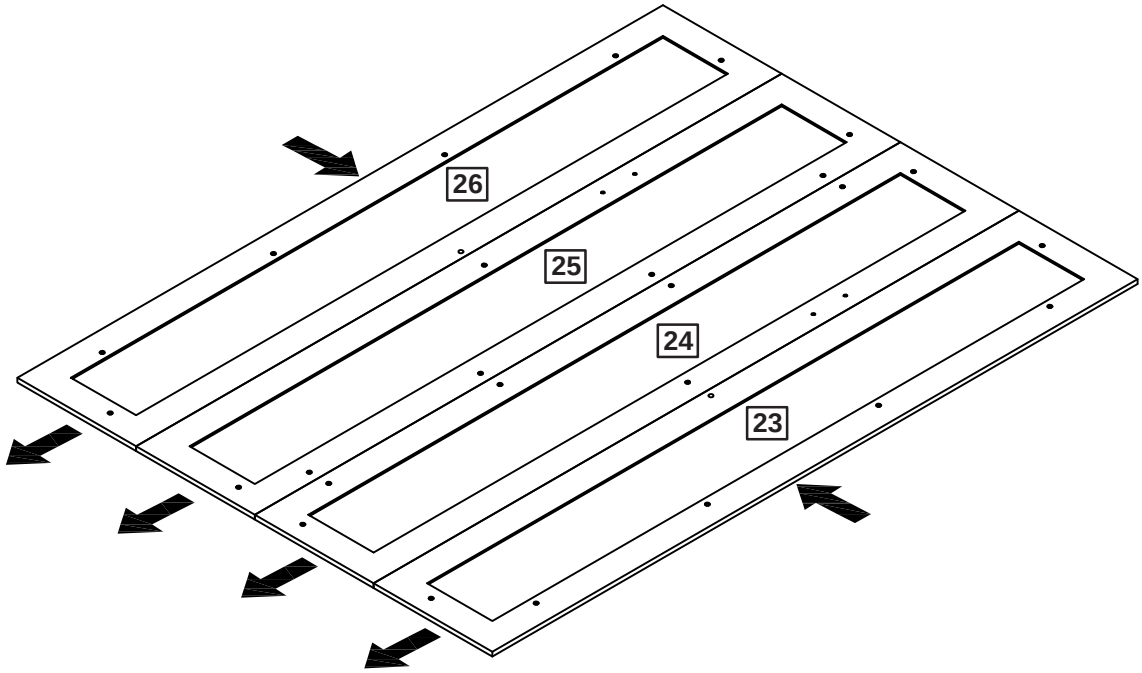

Step 16

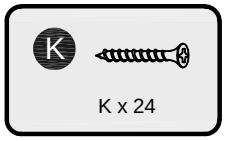

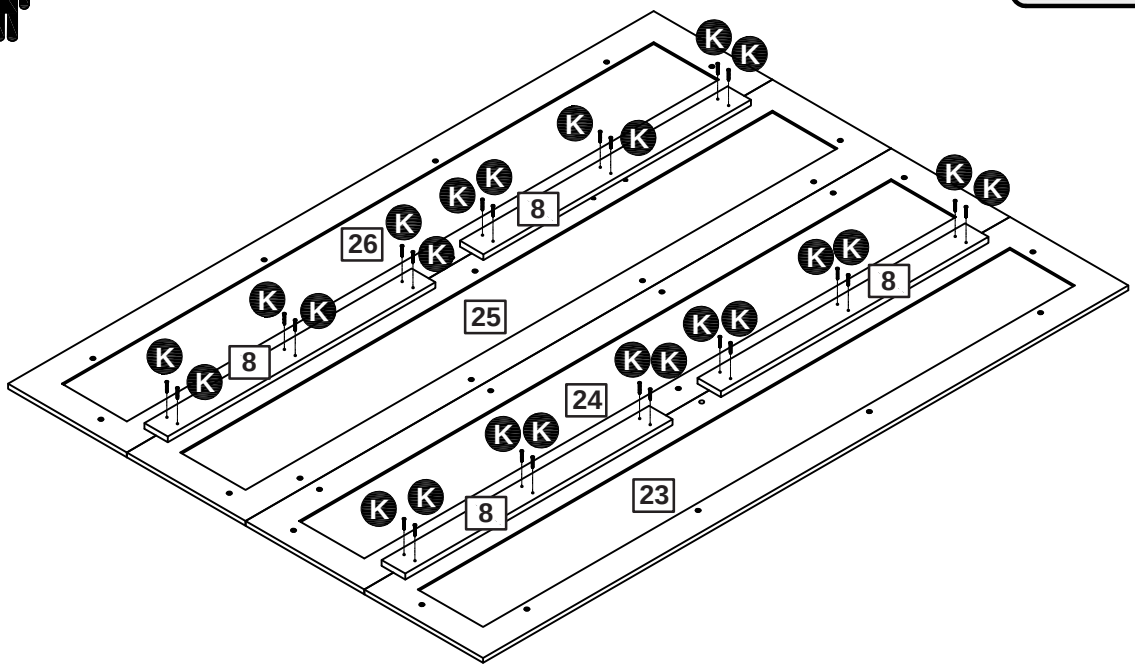

Assembly Instructions

Step 17

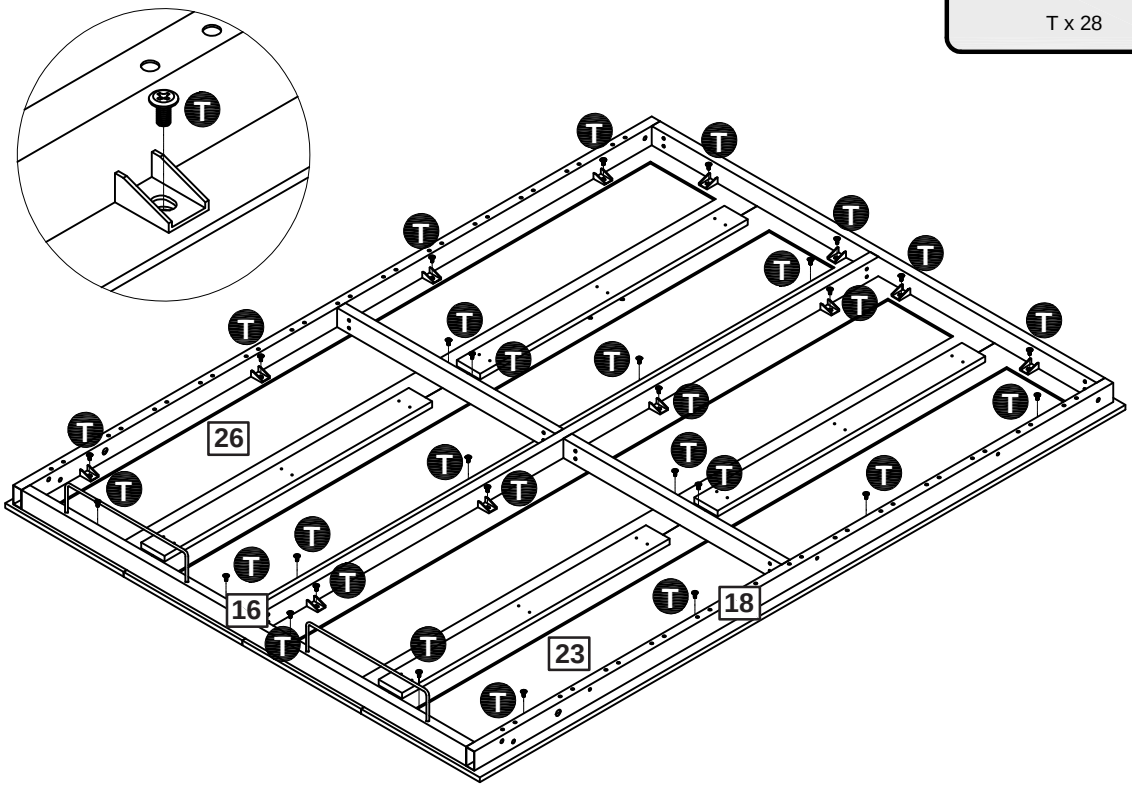

Step 18

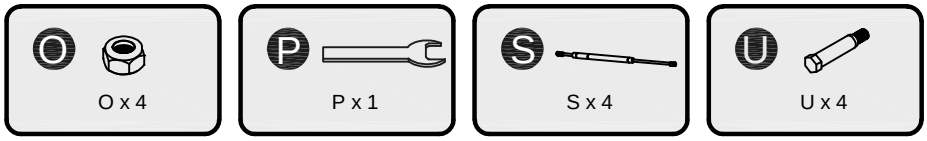

The inside hydraulic, the thin metal rod pointing upward

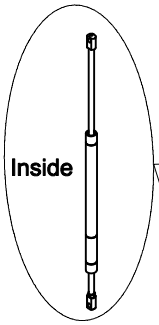

The outside hydraulic, the thin metal rod pointing downwards

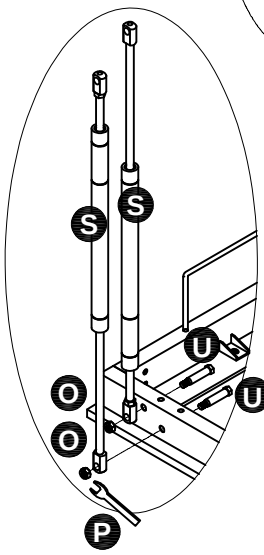

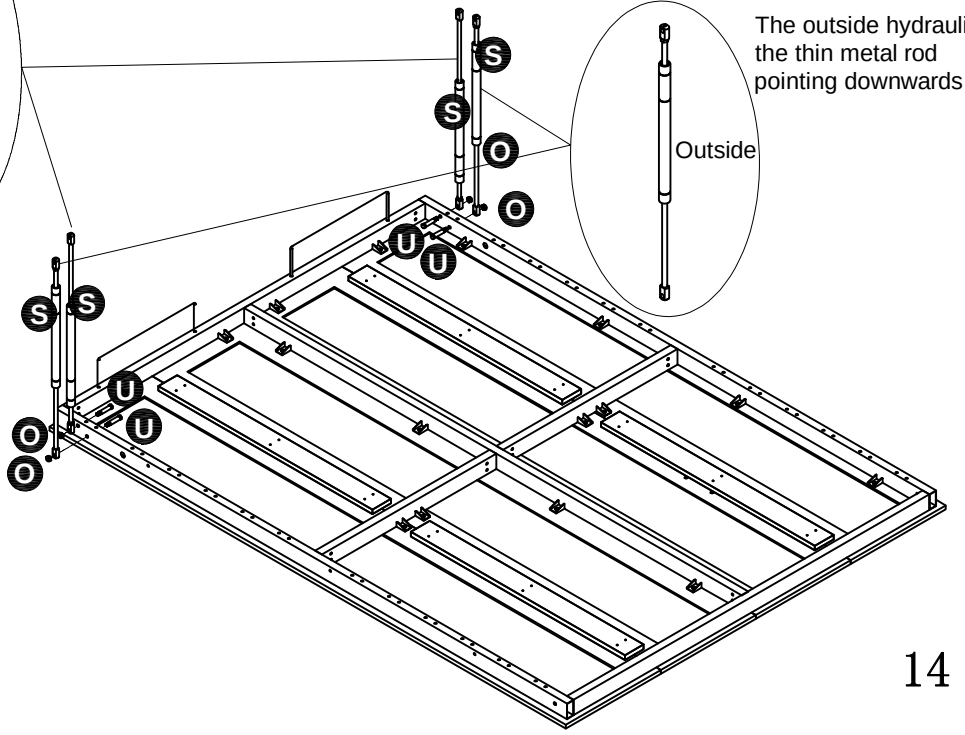

Assembly Instructions

Step 19

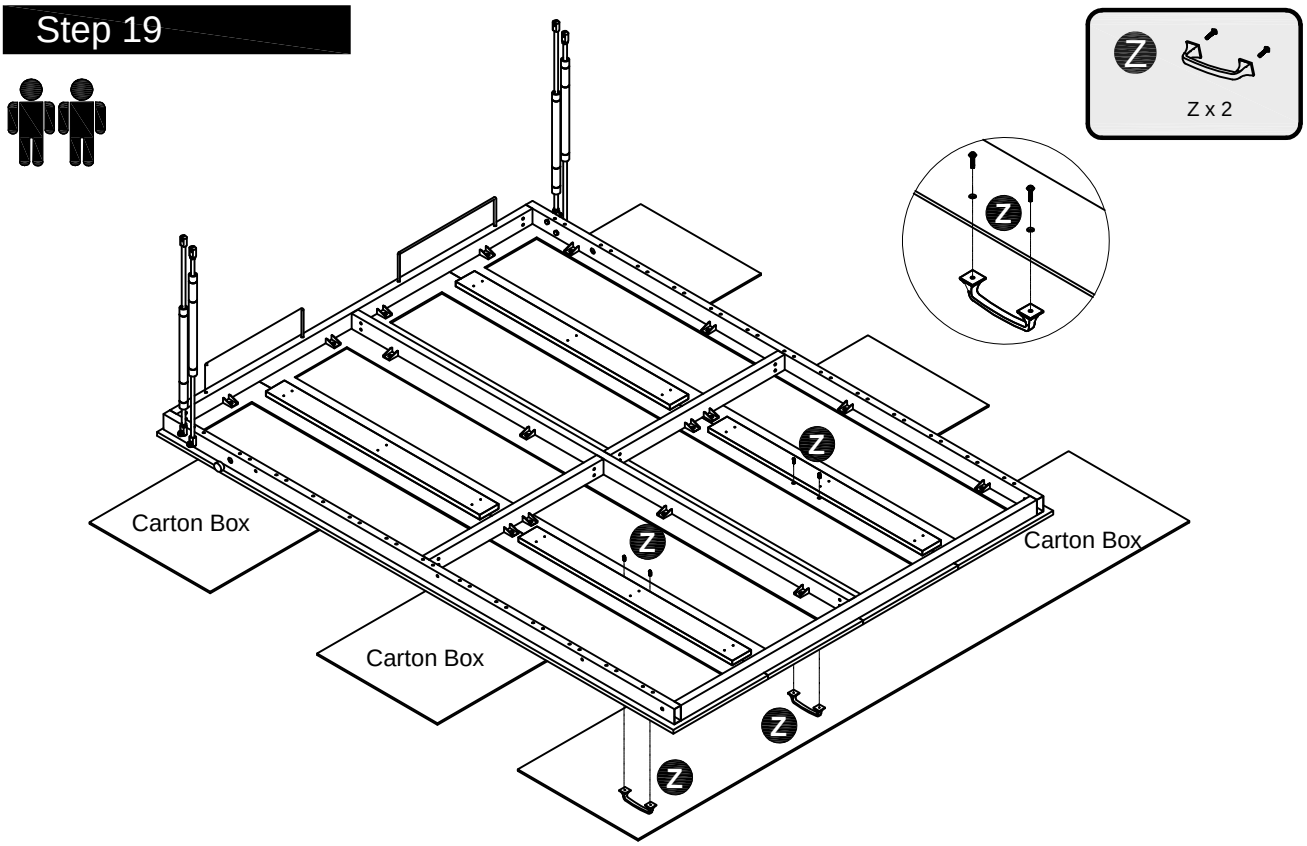

Step 20

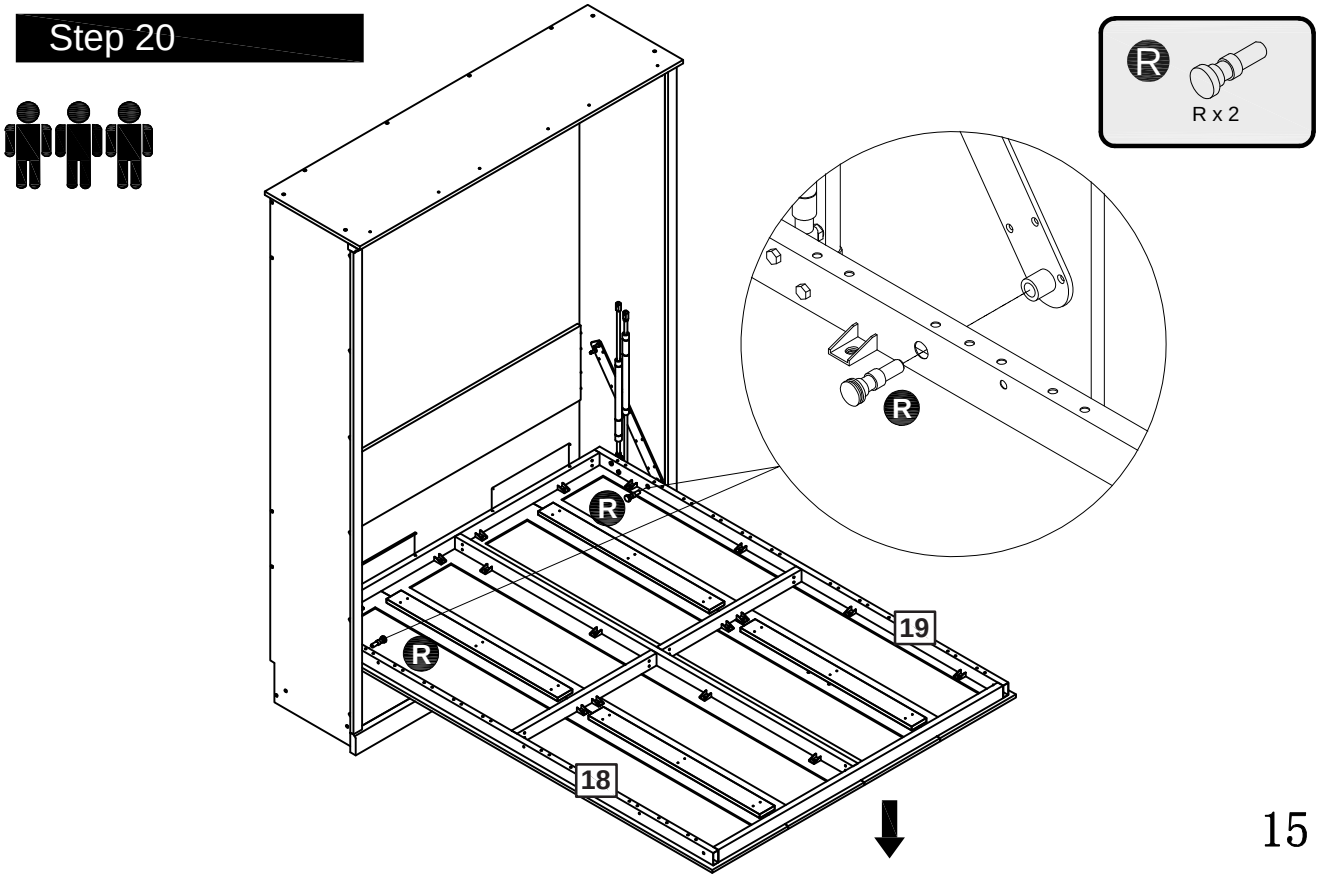

Step 21

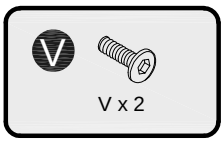

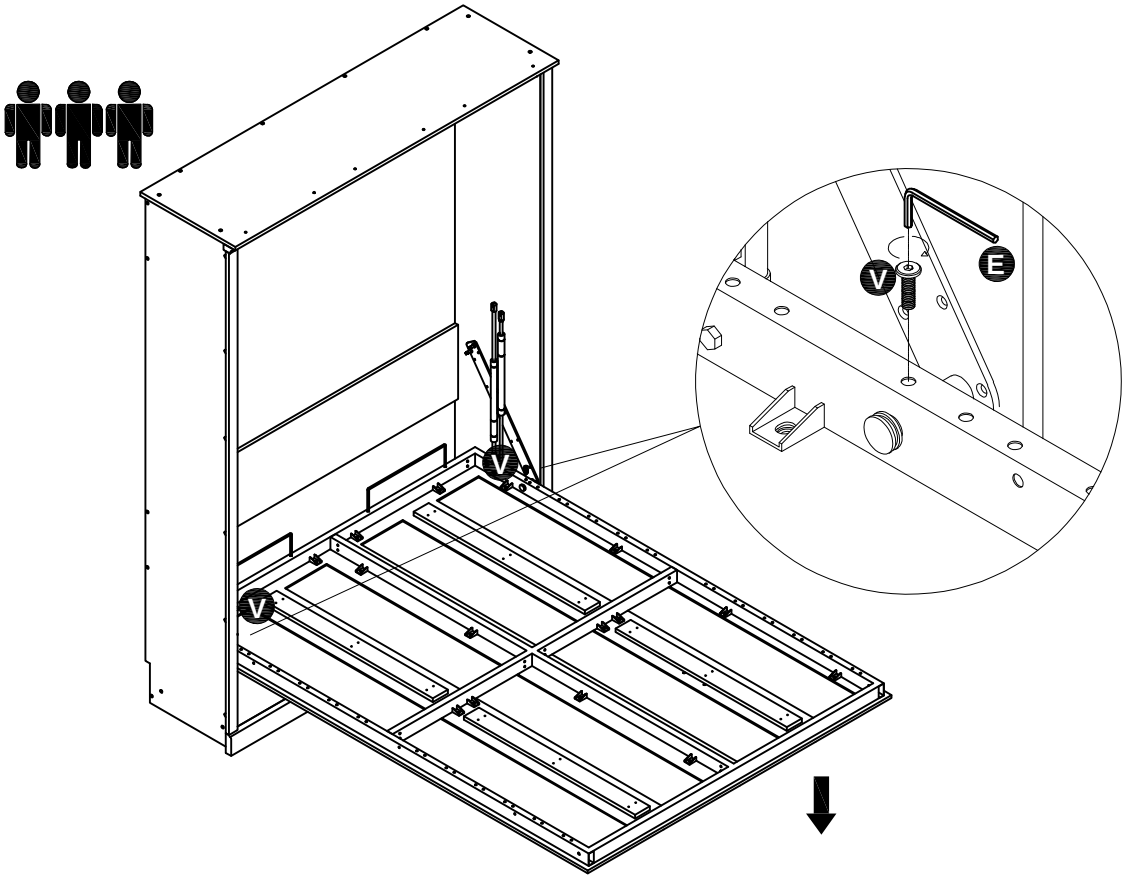

Assembly Instructions

Step 22

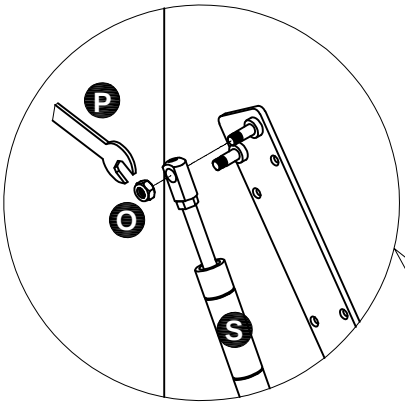

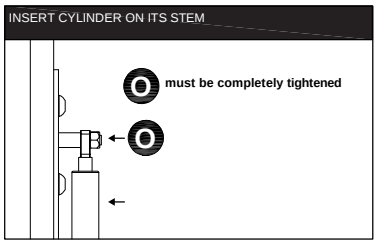

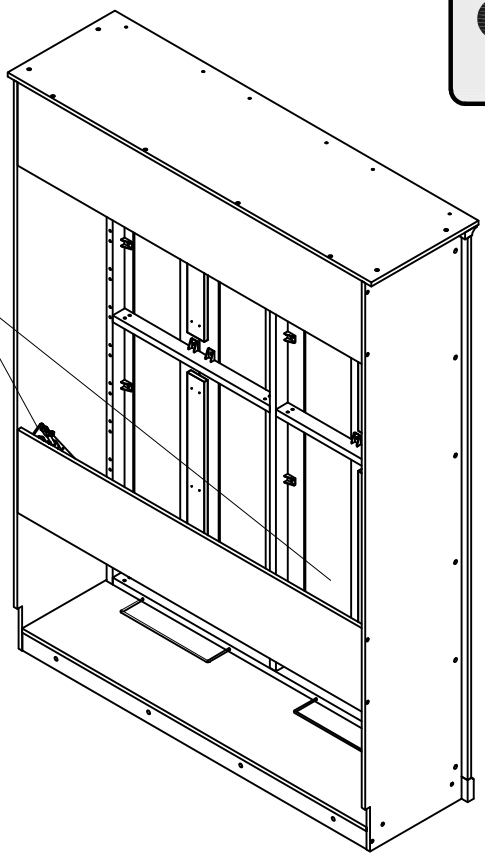

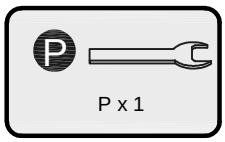

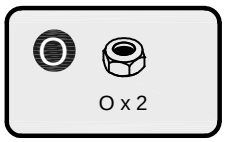

1.Push the door to the bottom
2.Push the door forward a little, let the Cylinder rod cover the screw head

Step 23

Adjust the distance of the door,let the Cylinder rod cover the screw head

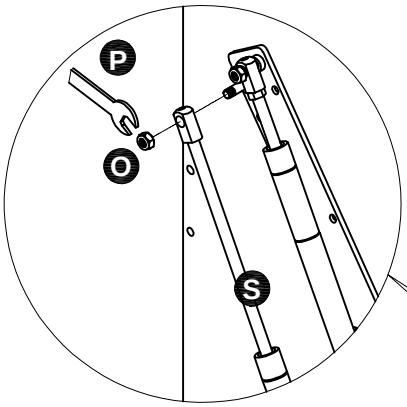

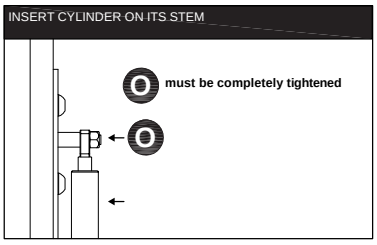

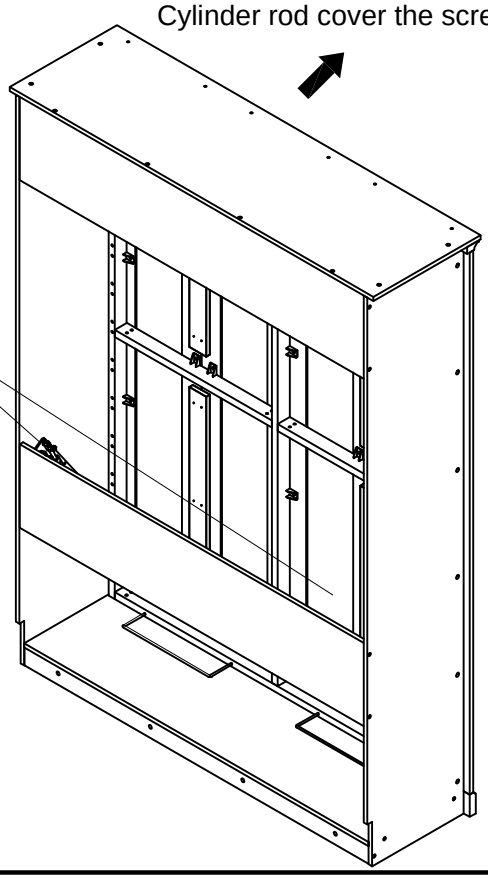

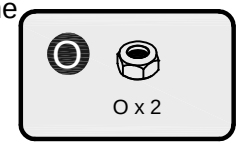

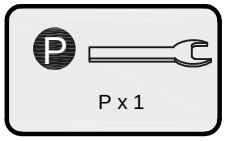

WALL ANCHORING INSTRUCTIONS

INSTALLATION RECOMMENDATIONS — MASONRY

1 Determine the position of the bed in the room.

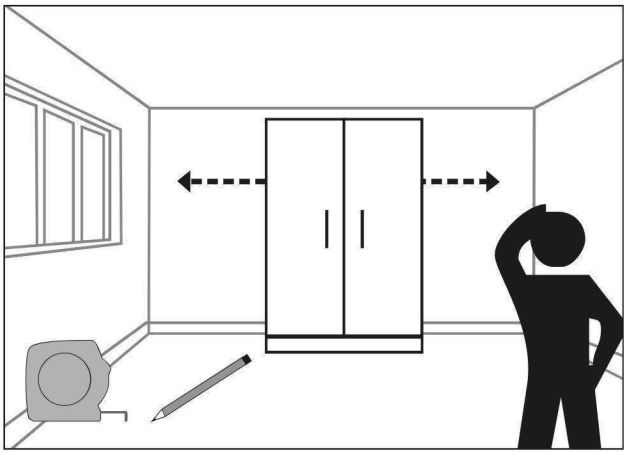

2 Put the bed back in its place. Please keep it vertical and horizontal

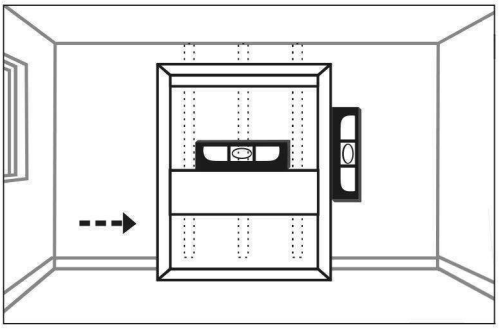

3 Pre-drill the piece of plywood #8 with 6 pilot holes of 3/8" (8 mm) diameter distributed horizontally in order to cover the width of the anchoring section. With the bed in position, mark the position of the 6 holes on the masonry wall.

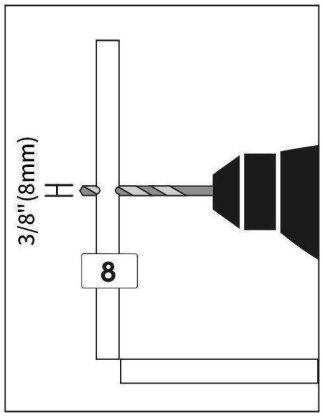

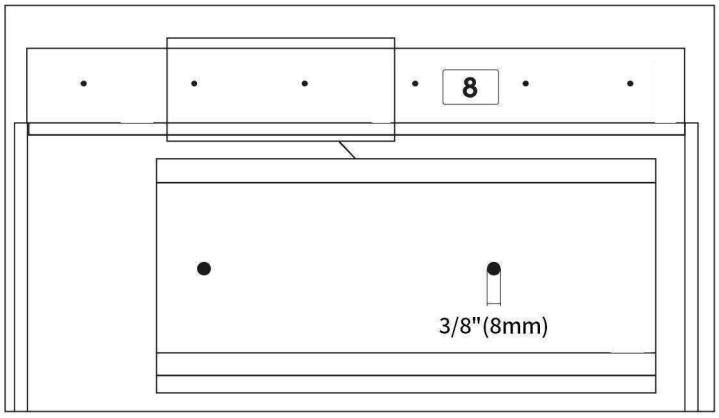

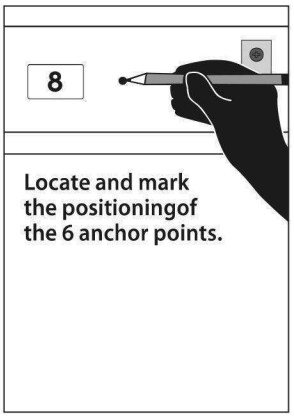

4 Move the bed again.

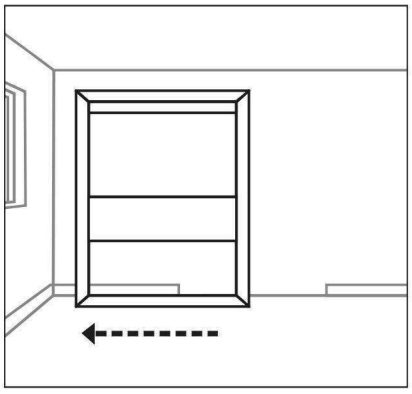

5 Using a 5/32" (10mm) diameter masonry bit, drill into the drywall and masonry (a hammer drill is required).

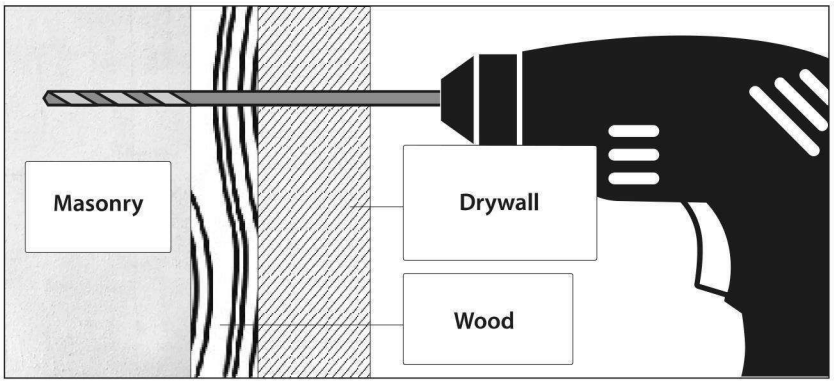

WALL ANCHORING INSTRUCTIONS

INSTALLATION RECOMMENDATIONS — MASONRY

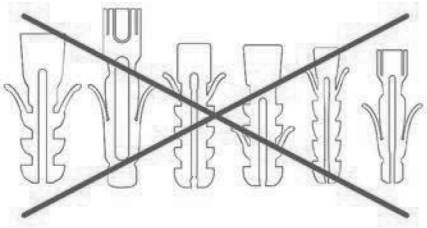

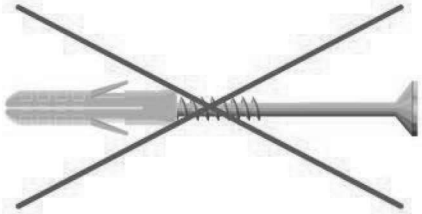

IMPORTANT WARNINGS

INSTALLATION AND APPROPRIATE HARDWARE
Using appropriate hardware, all the anchor screws of the wall bed must be firmly secured to the wood or metal studs, the structural components, or a masonry wall. **Only wall anchor screws for wood-frame walls are provided with this bed.**

NUMBER OF SCREWS NEEDED
You need a total of six (6) wall anchor screws.

THE SCREWS MUST BE VERY WELL ANCHORED TO THE STRUCTURAL COMPONENTS OF THE WALL.

6 **Put the bed back in its place. Put the CONCRETE SCREWS 3/8"(10mm) diameter X APPROPRIATE LENGTH into the holes of part #8 and screw the bed onto the masonry wall until tight against the wall. Screw must be at least 43/8"(110mm) deep into masonry. USE AN ELECTRIC SCREWDRIVER WITH AN ADJUSTABLE TENSION CLUTCH THAT HELPS PREVENT OVER-TIGHTENING AND STRIPPING.**

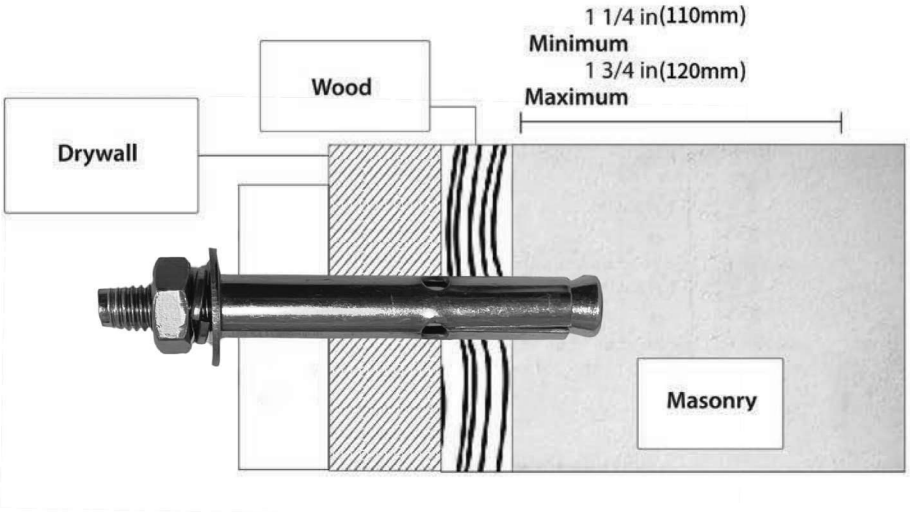

WALL ANCHORING REQUIREMENTS & INSTALLATION RECOMMENDATIONS

Important information to read before starting the assembly.
Keep this information for future reference.

IMPORTANT WARNINGS

Risk of serious injuries if the wall bed tips over.
To prevent wall bed from tipping over, mount it permanently to the wall.
Only a qualified person* must carry out the installation and any possible adjustment of the wall bed (including disassembly). If the wall bed is not firmly mounted (anchored) to the wall, it might tip over and cause serious injuries to the installer, users of the bed as well as the people near the bed.
The choice of wall anchoring depends on the type of wall. Use wall anchors suitable for the wall material.

* Qualified person: it is necessary to have a good understanding of the wall structure where the bed is anchored, including the positioning of the wall studs and structural components in the case of a wood or metal structure. If you do not have the necessary skills, make sure that the wall anchoring is done by someone who has the qualifications and required knowledge. When you choose the installer, make sure to comply with all applicable regulations in the province, state or country where the furniture is installed.

IMPORTANT WARNINGS

INSTALLATION AND APPROPRIATE HARDWARE

Using appropriate hardware, all the anchor screws of the wall bed must be firmly secured to the wood or metal studs, the structural components, or a masonry wall.

Only wall anchor screws for wood-frame walls are provided with this bed.

NEVER USE DRYWALL ANCHOR SCREWS OR SECURE THE BED TO DRYWALL

See wall anchoring requirements and installation notes provided in the instruction manual, according to the type of wall, and use the appropriate anchors such as described in this manual.

NUMBER OF SCREWS NEEDED

Two (2) screws are required for each anchor point. Three (3) wall anchor points are necessary for the proper installation of the wall bed. So you need a total of six (6) wall anchor screws.

THE SCREWS MUST BE VERY WELL ANCHORED TO THE STRUCTURAL COMPONENTS OF THE WALL.

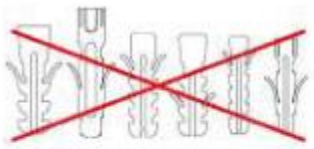

**** A CERTIFIED CONSTRUCTION PROFESSIONAL, IN COMPLIANCE WITH APPLICABLE REGULATIONS IN THE PROVINCE, STATE, OR COUNTRY WHERE THE FURNITURE IS INSTALLED.**

Step 24

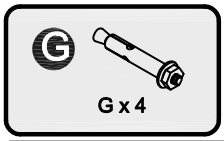

C:\Users\Administrator\1_4.png

ATTENTION:
For safety and stability, we suggest you have to secure the anti tip accessories to the wall to prevent tipping, injury, and property damage.

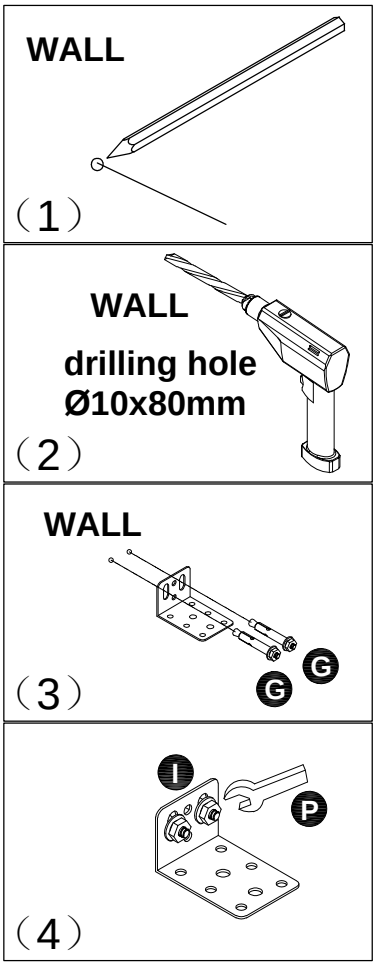

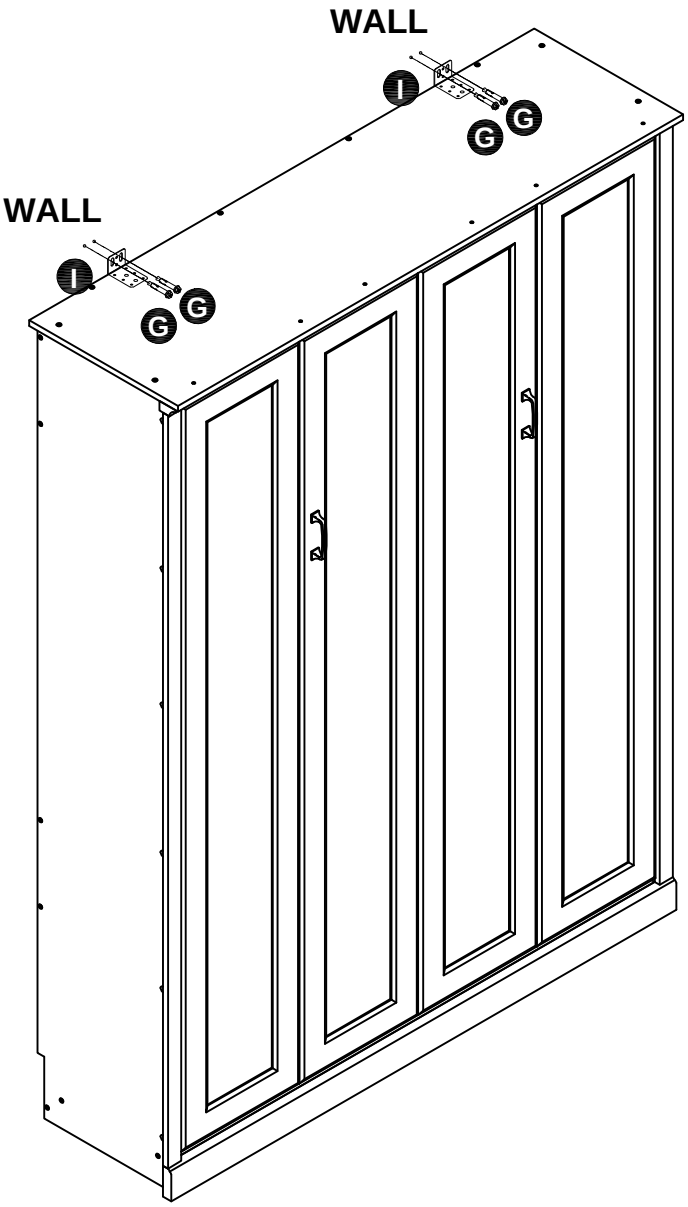

Assembly Instructions

Step 25

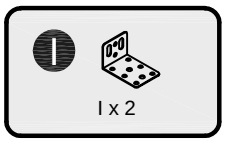

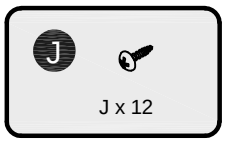

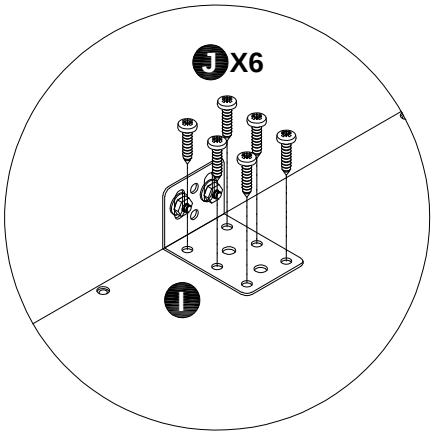

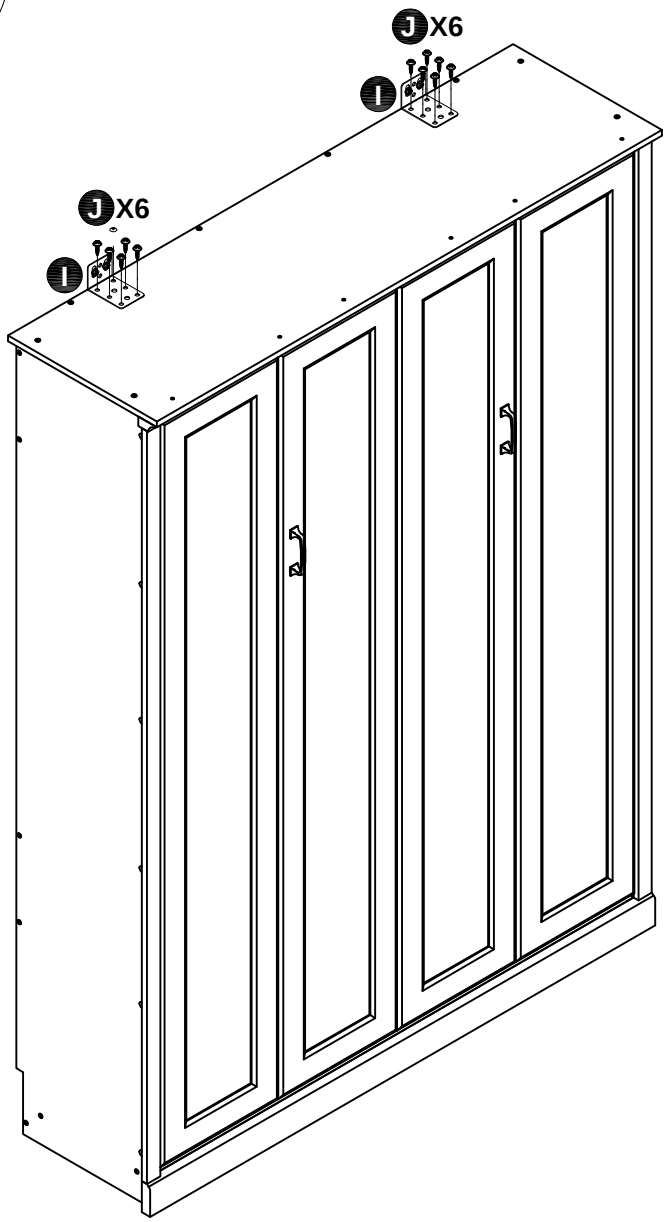

Assembly Instructions

Step 26

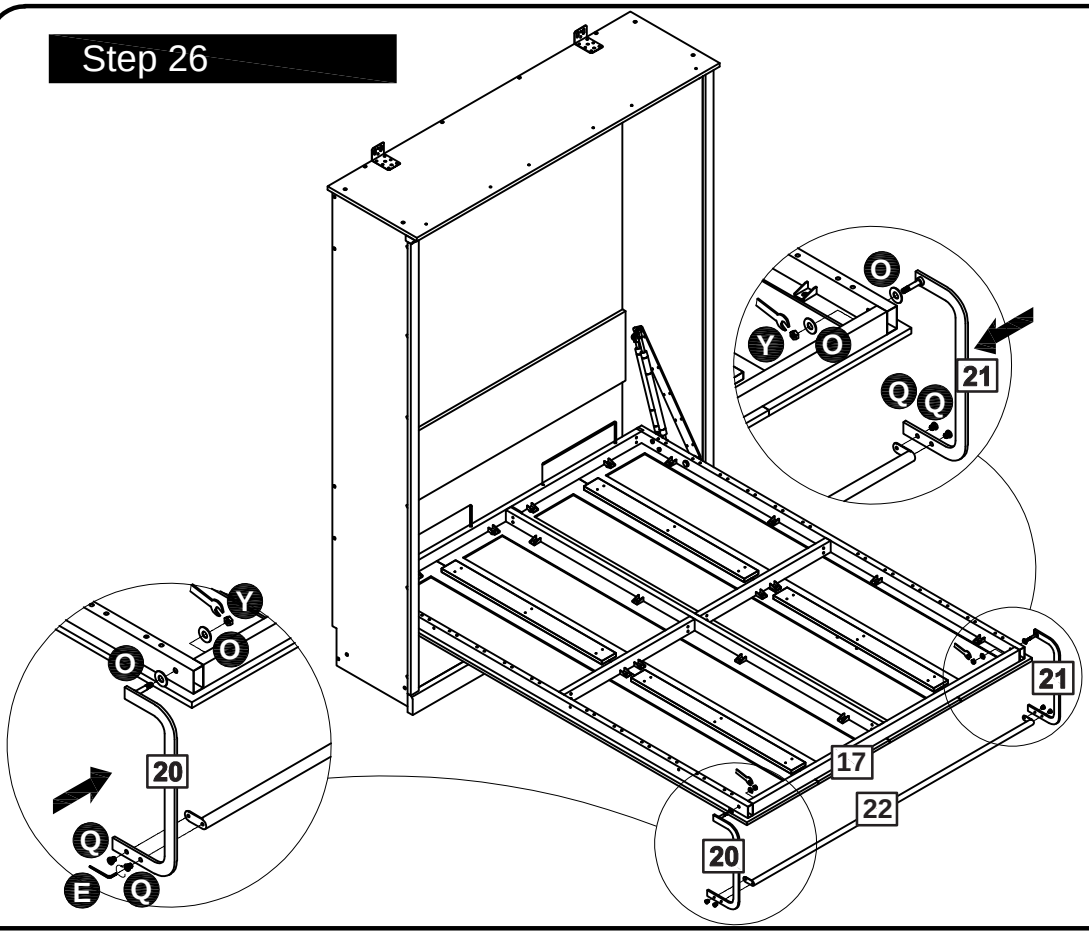

Step 27

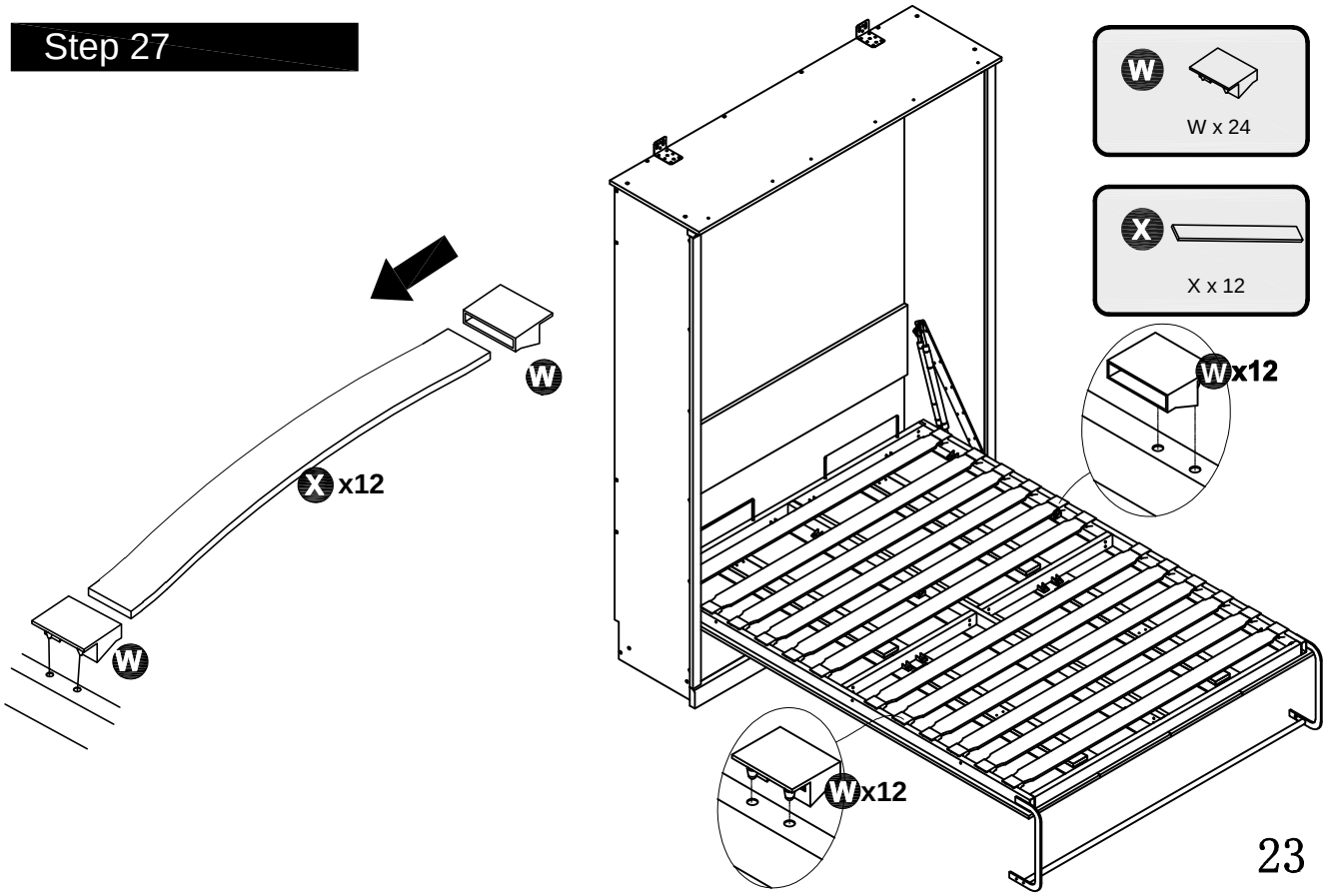

Assembly Instructions

Step 28

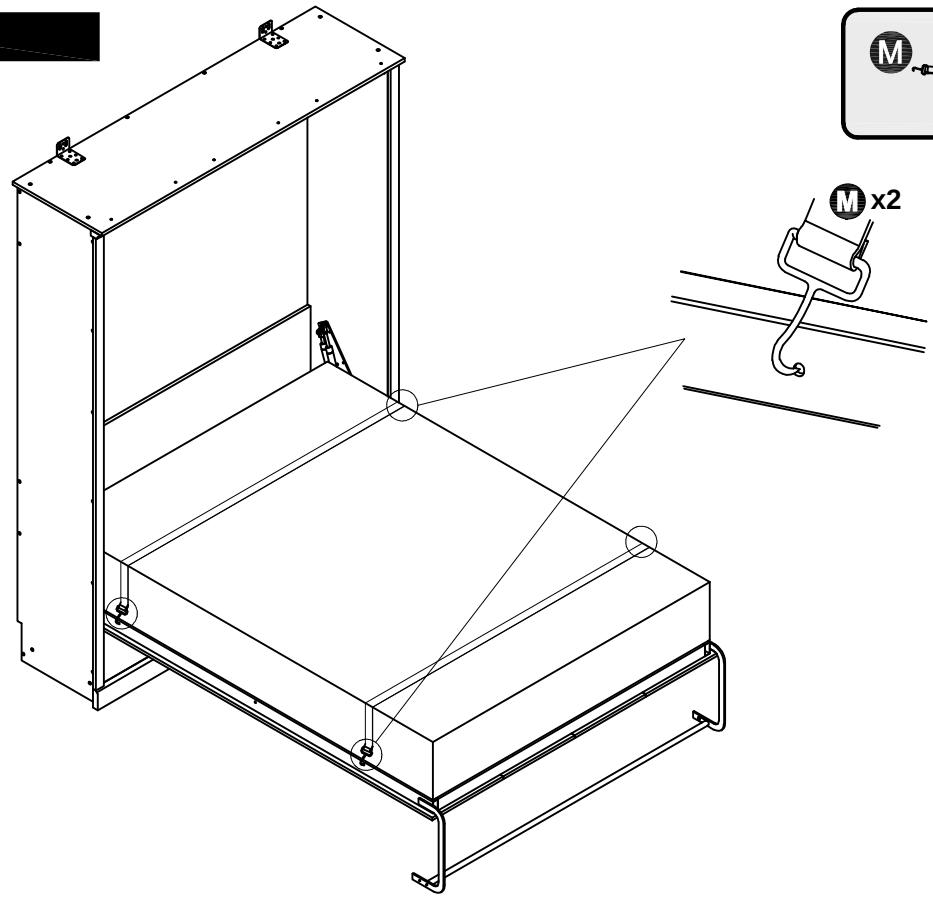

Step 29

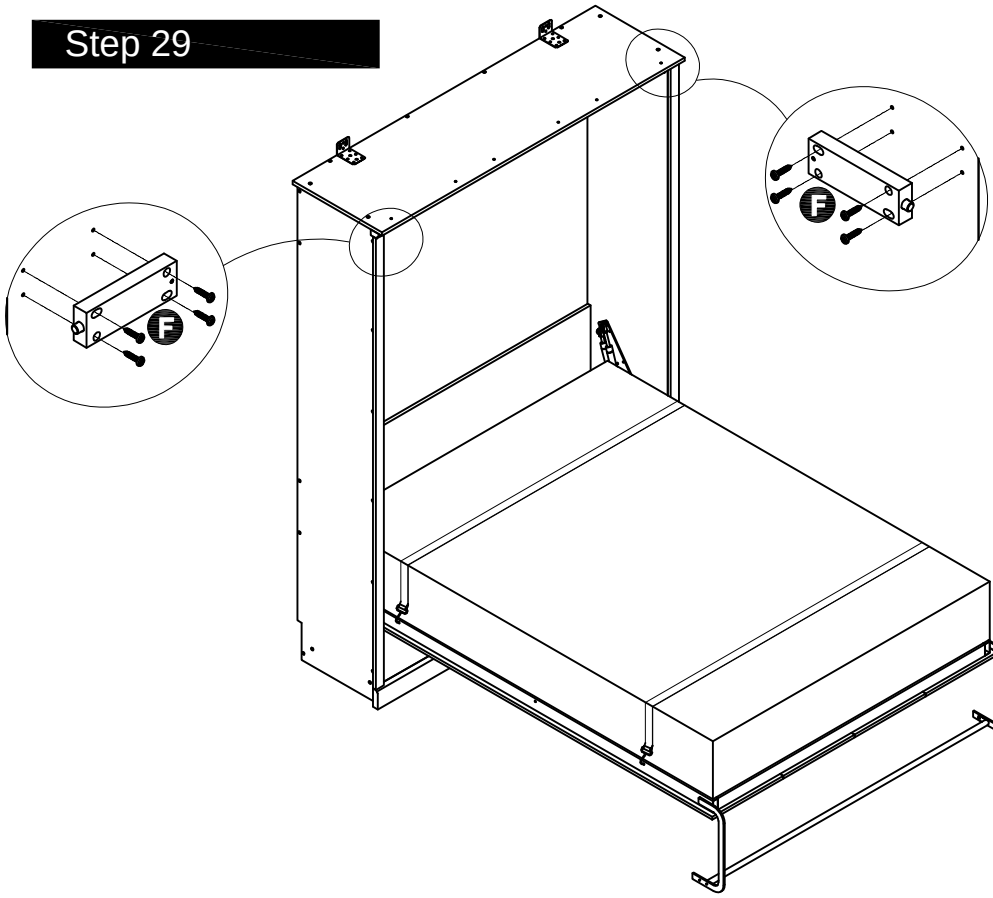

Step 30

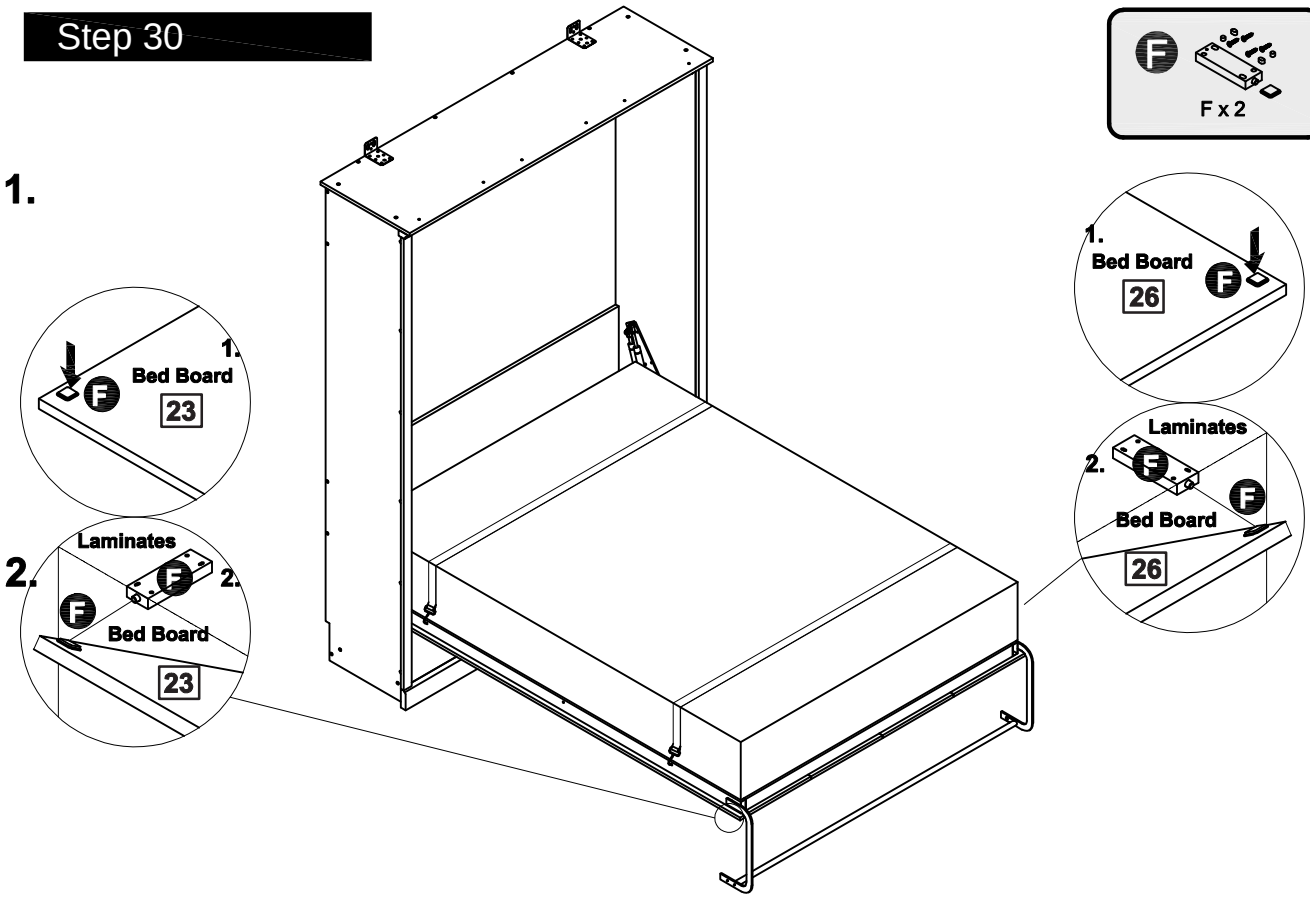

Step 31

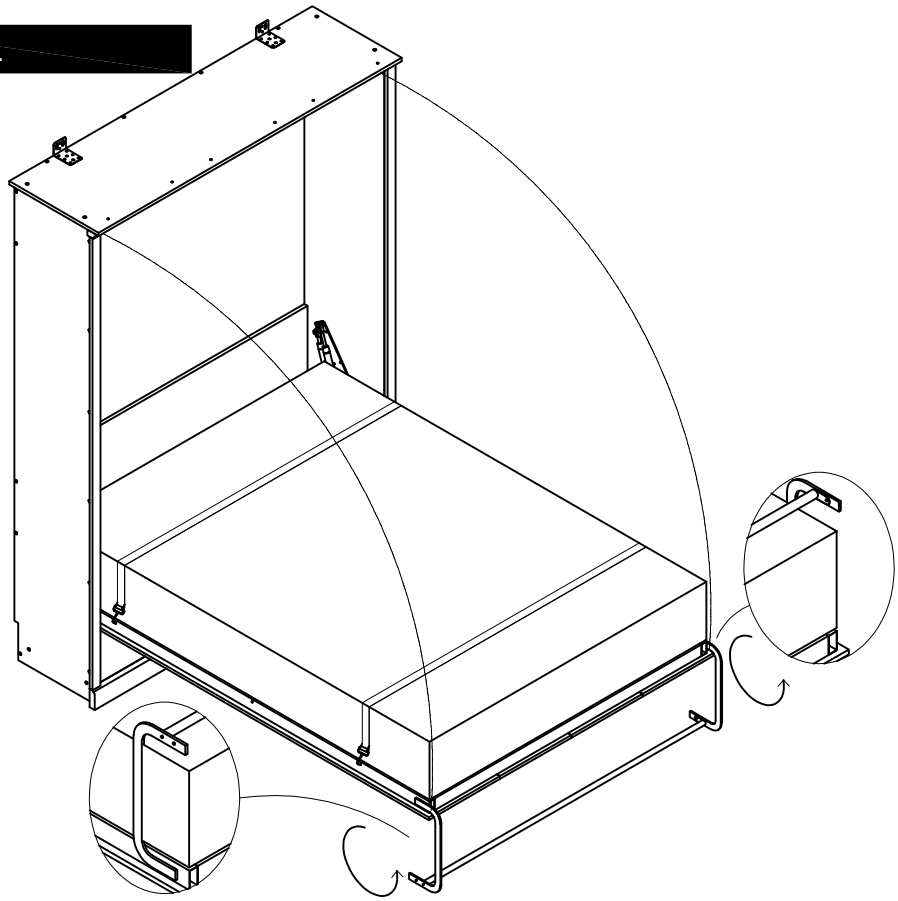

Step 32

2.

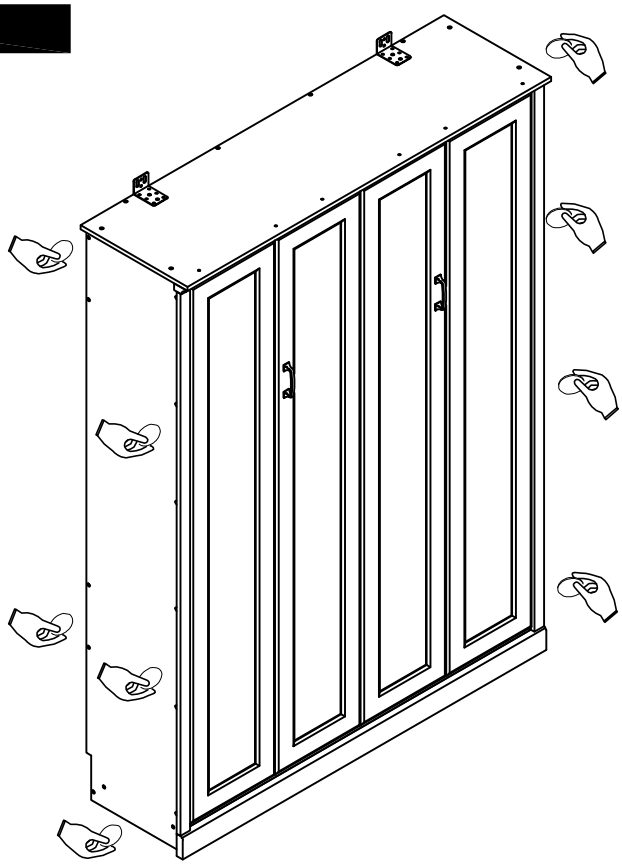

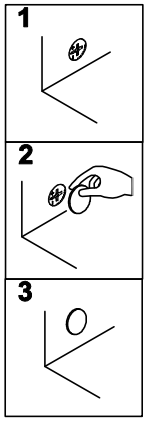

Step 33

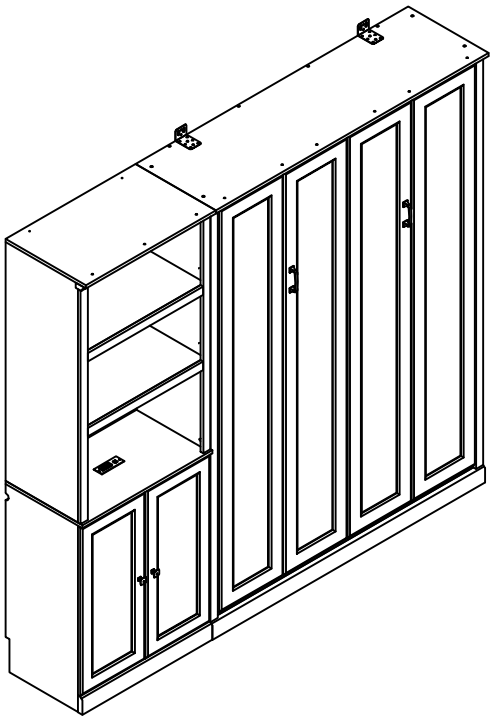

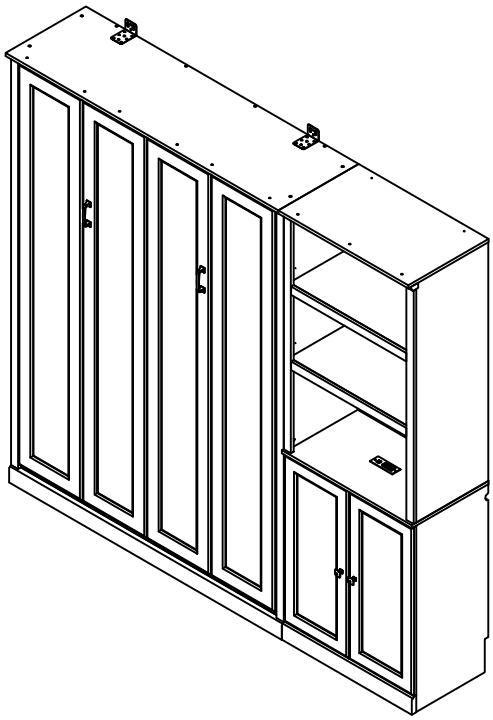

A Guide to Wall Mounting & Fixings

Important note:

If plastic wall plugs (rawl plugs) are supplied with your product, e.g.:

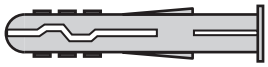

- these are only suitable for use in masonry walls.

If you are in any doubt about the correct wall plugs for your wall, seek professional advice.

Failure of the product due to using the incorrect fixings is the responsibility of the installer.

Important: when drilling into walls always check that there are no hidden wires or pipes etc.

Make sure that the screws and wall plugs being used are suitable for **supporting your unit. Consult a qualified tradesperson if you** are unsure.

Hints:

1: General rule: always use a larger screw and wall plug if you are not sure.
2: Ensure you use the recommended drill bit to match the wall plug and hole size.
3: Ensure you drill the hole horizontally; do not force the drill or enlarge the hole.
4: Take extra care when drilling high walls, ceilings and ceramic tiles. Ensure wall plugs are inserted beyond the thickness of the ceramic tiles to avoid the tiles splitting or cracking.
5: Ensure wall plugs are well fitted and are a tight fit in the drilled hole.

Types of walls

You can use one of the following types of wall plug if your walls are made of brick, breeze block, concrete, stone or wood.

No.1 "General Purpose" wall plug

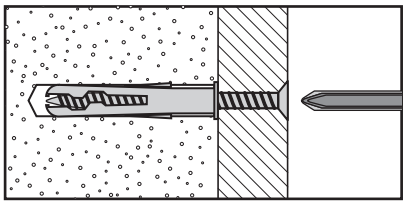

Generally aerated blocks should not be used to support heavy loads, use a specialist fitting in this case. For light loads, general purpose wall plugs can be used.

No.3 "Cavity Fixing" wall plug

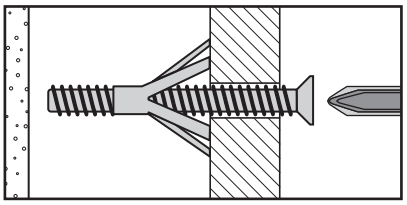

For use with plasterboard partitions or hollow wooden doors.

No.5 "Hammer Fixing" wall plug

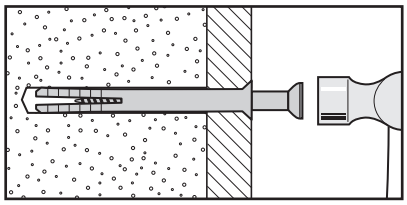

For use with walls stuck with plasterboard. The hammer fixing allows it to be fixed to the wall rather than the plasterboard. Always check the fixing is secure to the retaining wall.

No.2 " Plasterboard" wall plug

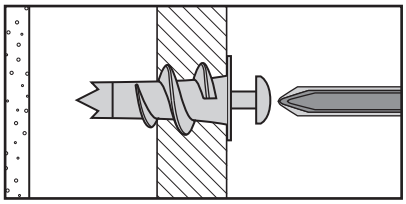

For use when attaching light loads onto plasterboard partitions.

No.4 " Cavity Fixing – Heavy Duty" wall plug

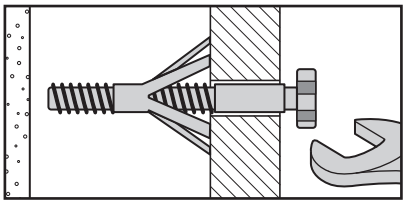

For use when fitting or supporting heavy loads such as shelving, wall cabinets and coat racks.

No.6 " Shield Anchor" wall plug – heavy loads

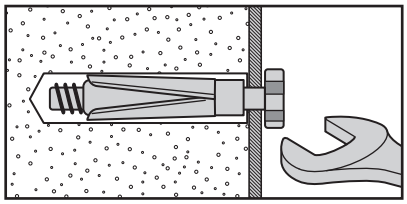

For use with heavier loads such as TV and HiFi speakers and satellite dishes etc.

Care & Maintenance

Safety: always check the fitting and location to ensure your safety in and around the home.

Fitting: from time to time check the fitting to ensure the wall plugs or screws do not become loose.