OUTDOOR PORCH SWING

ASSEMBLY INSTRUCTION

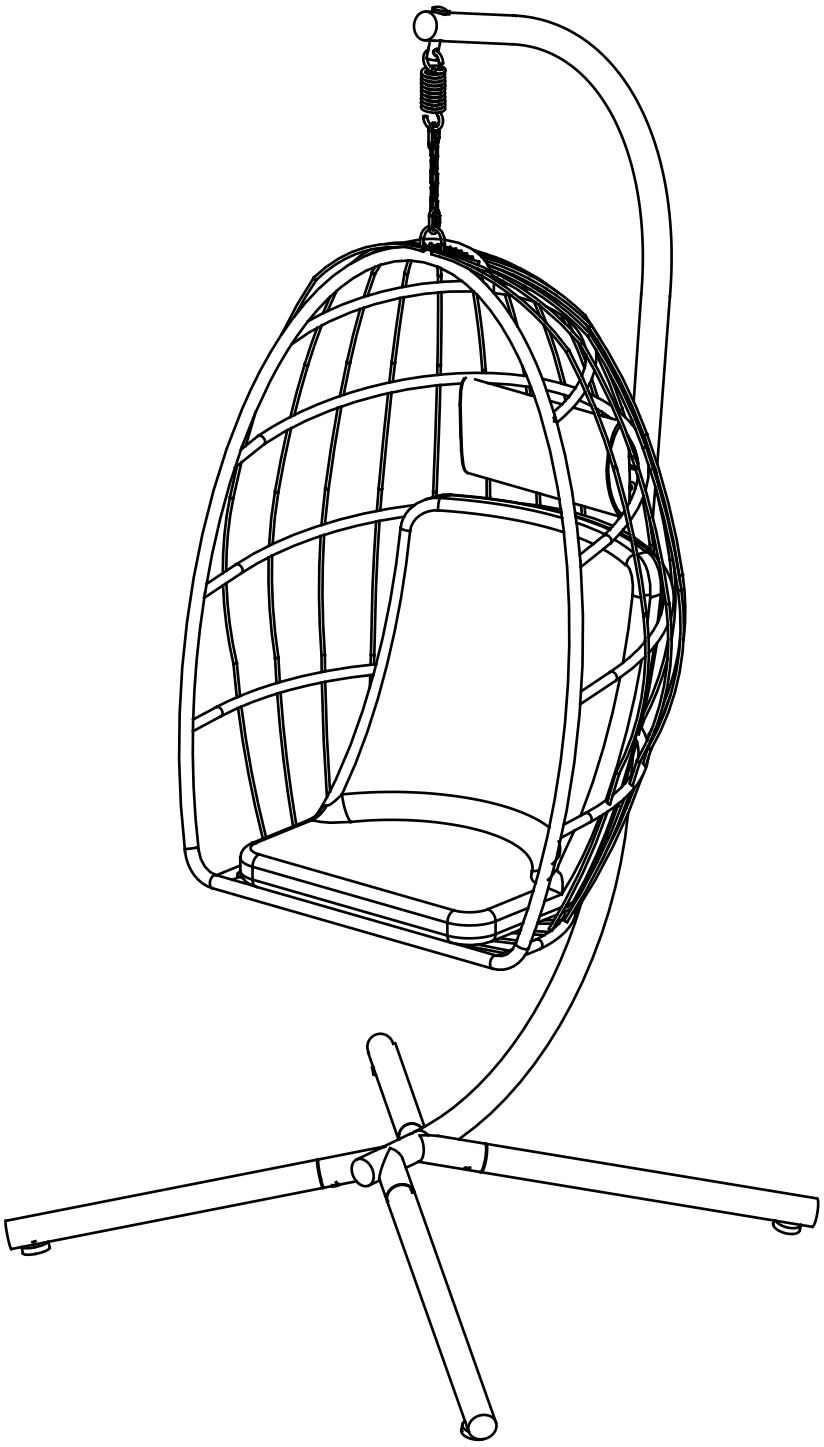

ATTENTION

Thanks for choosing our product.

1. Please check the part list carefully to make sure you've received all the parts.
2. **If there are any missing parts, please contact us with the number and quantity. We will send them to you ASAP.**
3. If there are any damaged parts, please contact us with clear pictures or video. We'll offer you the best solution after comfirming it.

NOTE

1. If one or some screws are fully tightened during assembly, the others screws may not be aligned with screw holes. 50% tighten before fastening all screws. Allen wrench is recommended instead of an electric drill.
2. If some screws are not aligned with holes during assembly, please loosen all the other screws to 50% and continue the assembly process.
3. If the items is not stable, please loosen all the screws, adjust it on a flat ground and tighten all the screws.
4. Please don't put the furniture outside without any sunshades in rainy, snowly days. Waterproof cover is recommended for keeping it last several years.
5. The set is manually woven by hands. The PE rattan weave of each set is different. Each model is unique.

Assembly Instruction

Parts List

1 	2 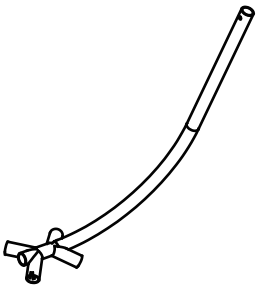	3 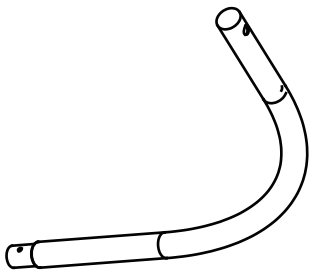
4PCS	1PCS	1PCS
4 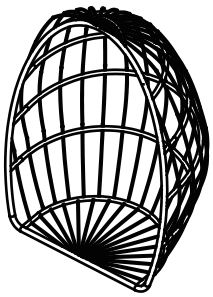	5 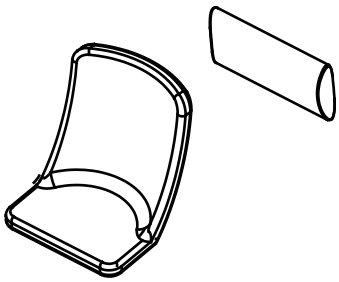	6 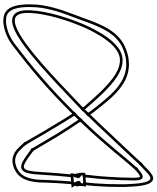
1PCS	1PCS	1PCS

7 	8 	9 	10 
1PCS	1PCS	1PCS	1PCS
A 	B 	C 	D 
4PCS	5PCS	4PCS	1PCS

Assembly Instruction

We recommend tightening the screws to about 60% tightness during the initial installation, and tighten all the screws until all the installation is complete.

Step 1

1*4	A*4

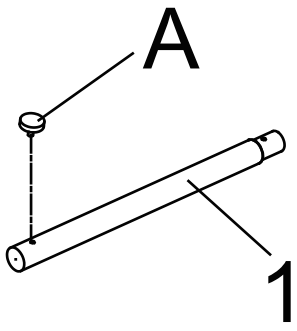

X4

Step 2

2*1	B*4
C*4	D*1

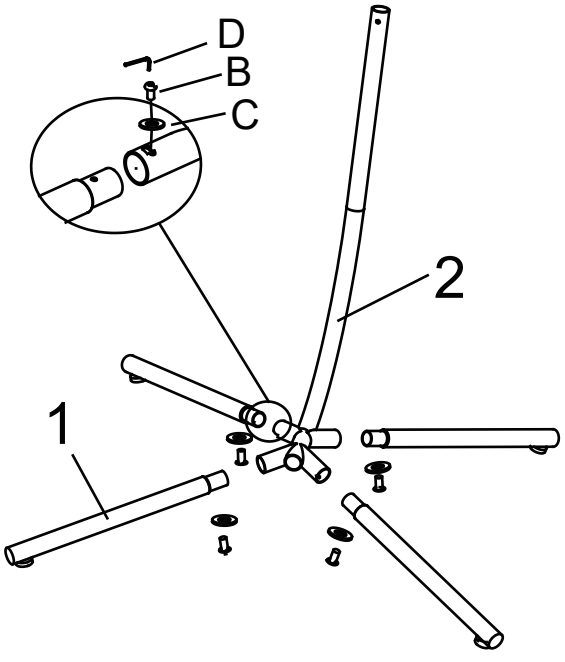

Step 3

3*1	7*1	8*1
B*1	D*1	

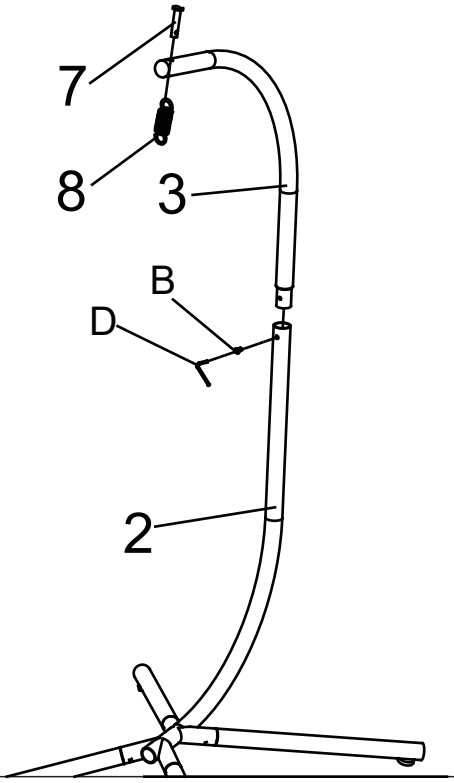

Assembly Instruction

Step 4

4*1	9*1	10*1

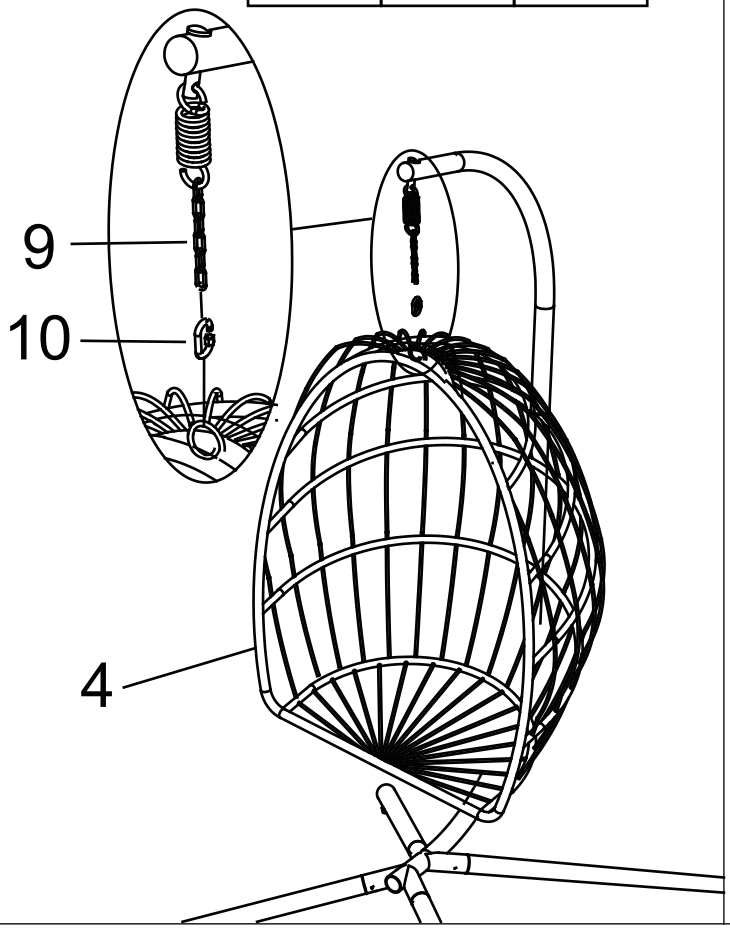

Step 5

5*1	6*1

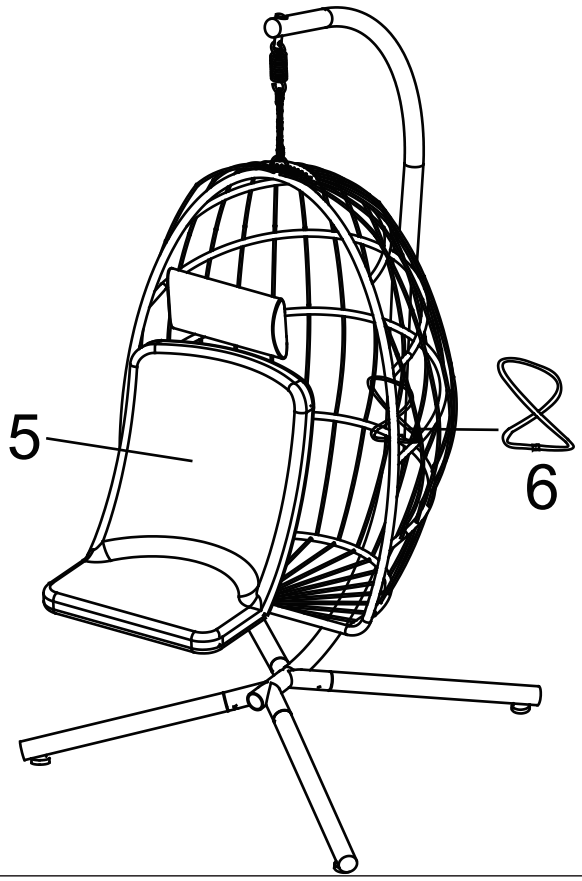

WARRANTY

So glad you have completed the assembly and can enjoy it.

If you are satisfied with our products, thank you for showing

your favored **outdoor porch swing** to your around.

AFTER-SALE POLICY

For return reason:

Wrong purchase, bought by mistake, no longer needed, doesn't meet expectation, a size smaller than expectation, customer need to cover the return shipping fee.

For cancel order:

Customer needs to pay for shipping fee and carrier handle fee if the item has been shipped out.

For change address: customer needs to pay for extra shipping fee and carrier handle fee if the item has been shipped out.

Customer Service:

Any problem with the product or shipping issue, please feel free to contact us, we will try our best to serve and help.