Assembly Instructions

EXTENSION TABLE

CAUTION: You must read this before you proceed

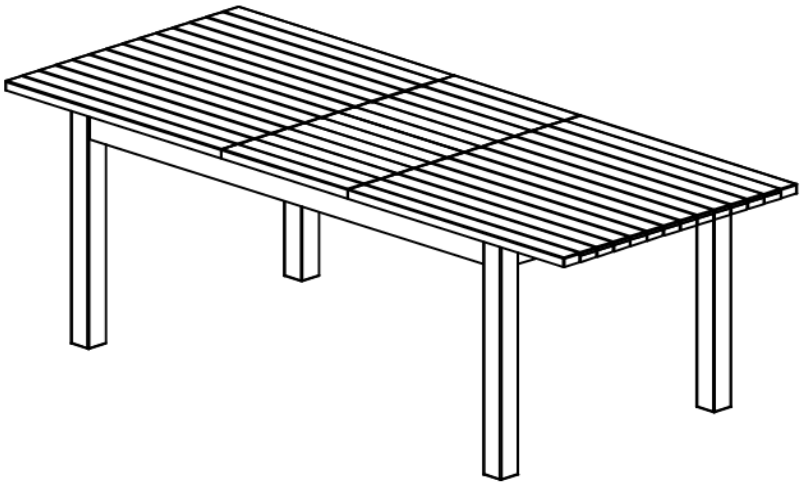

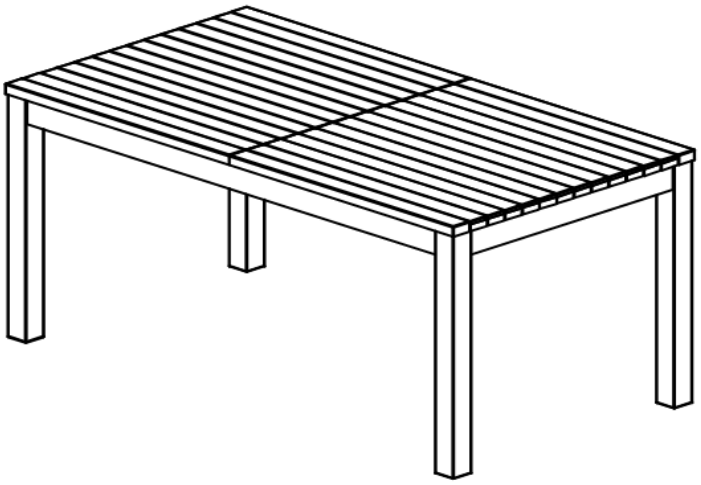

CAUTION: This Table is NOT a TOY.
Keep your child / children at bay in the process of assembly.
For turning the Table and to prevent damage to the Table, 02 persons may be needed to execute this action.

Parts List

Label	Picture	Description	Qty
A	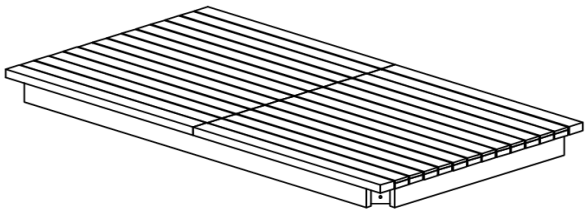	Table Top	1
B	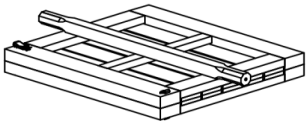	Expansion Board of Table Top	1
C		Leg	4

Hardware

No.	Picture	Description	Qty
①		Allen Wrench	2
②		Bolt (M8*55mm)	9
③		Washer	9
④		Screw (M7*60mm)	3

Assembly Preparation

Before Beginning Assembly:

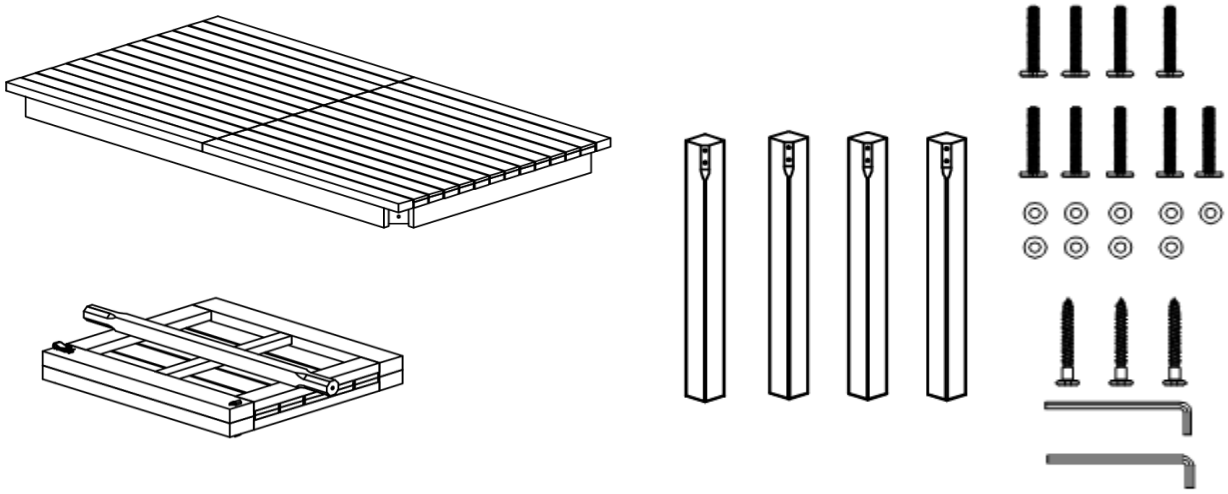

Assembly Steps

- Read instructions, cover to cover-
- Have 2 adults on hand for assembly-
- Do not assemble on flooring or carpet-
- Assemble on a clean non-marring surface (packing foam)-
- Save all packaging until finished-

OVERVIEW

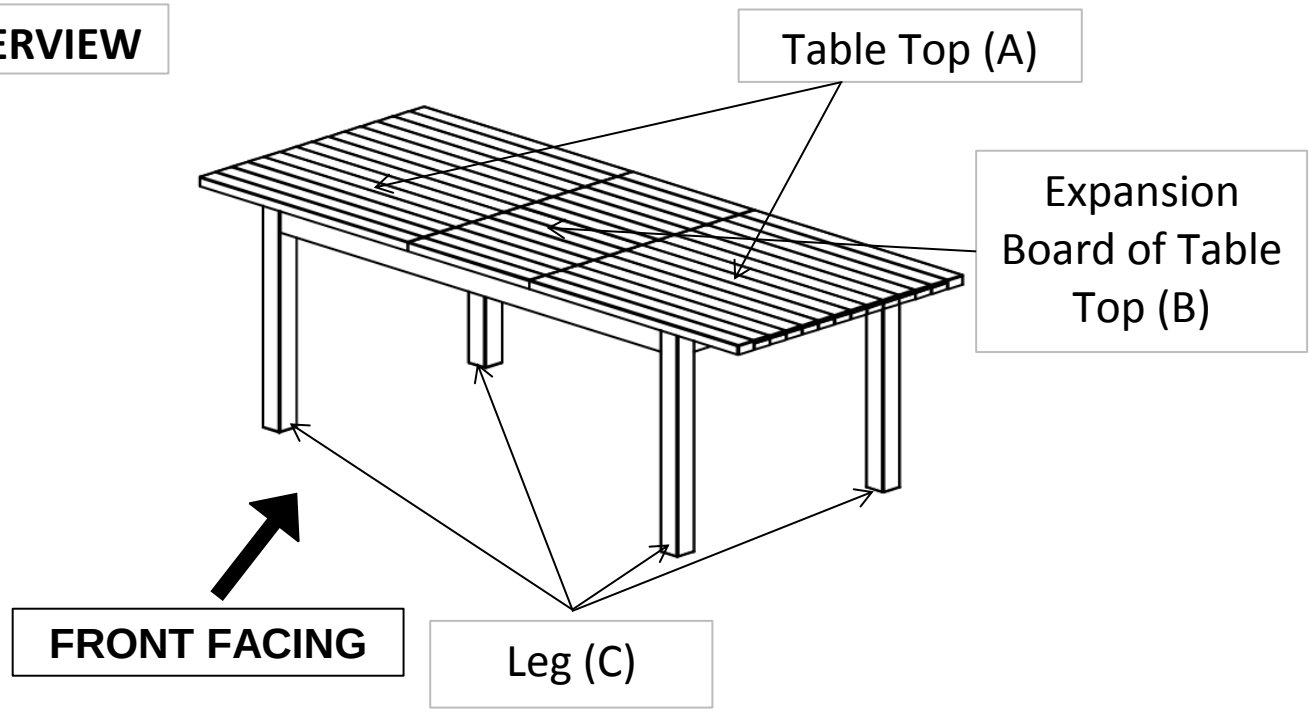

This Table has multiple parts and may require up to some 30 minutes to assemble. To give you an overview of the Table, the above picture to assemble to help you put the various parts into perspective. Please read through the instructions here below to familiarise the parts and steps before assembly.

Step 1

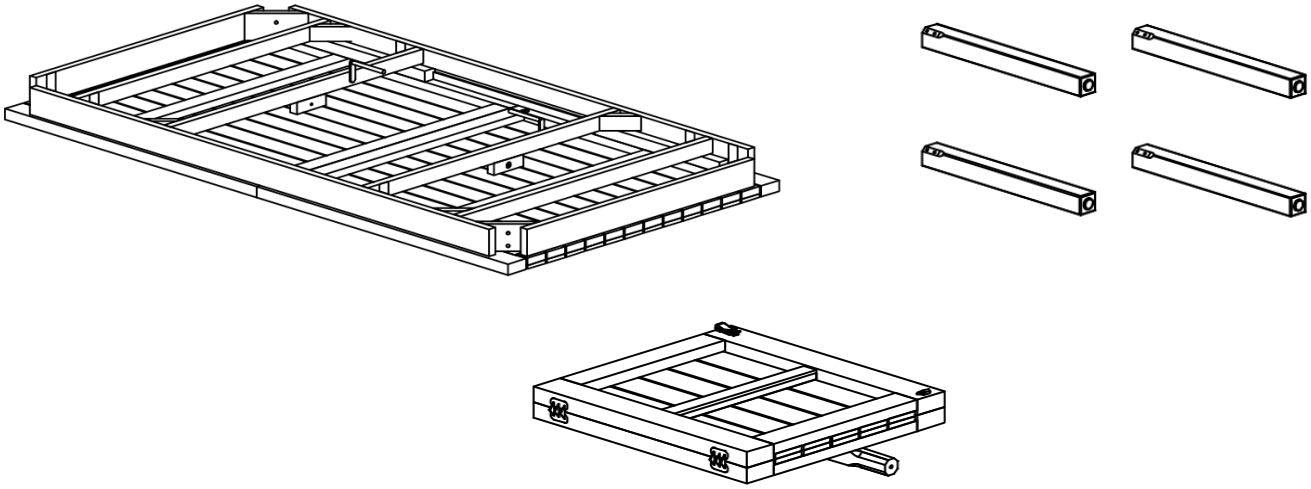

Unpack and place all parts on a clean non-marring surface.
With assistance from your adult partner, Carefully place the Table Top (A) with Expansion Board of Table Top (B) face down.

Step 2

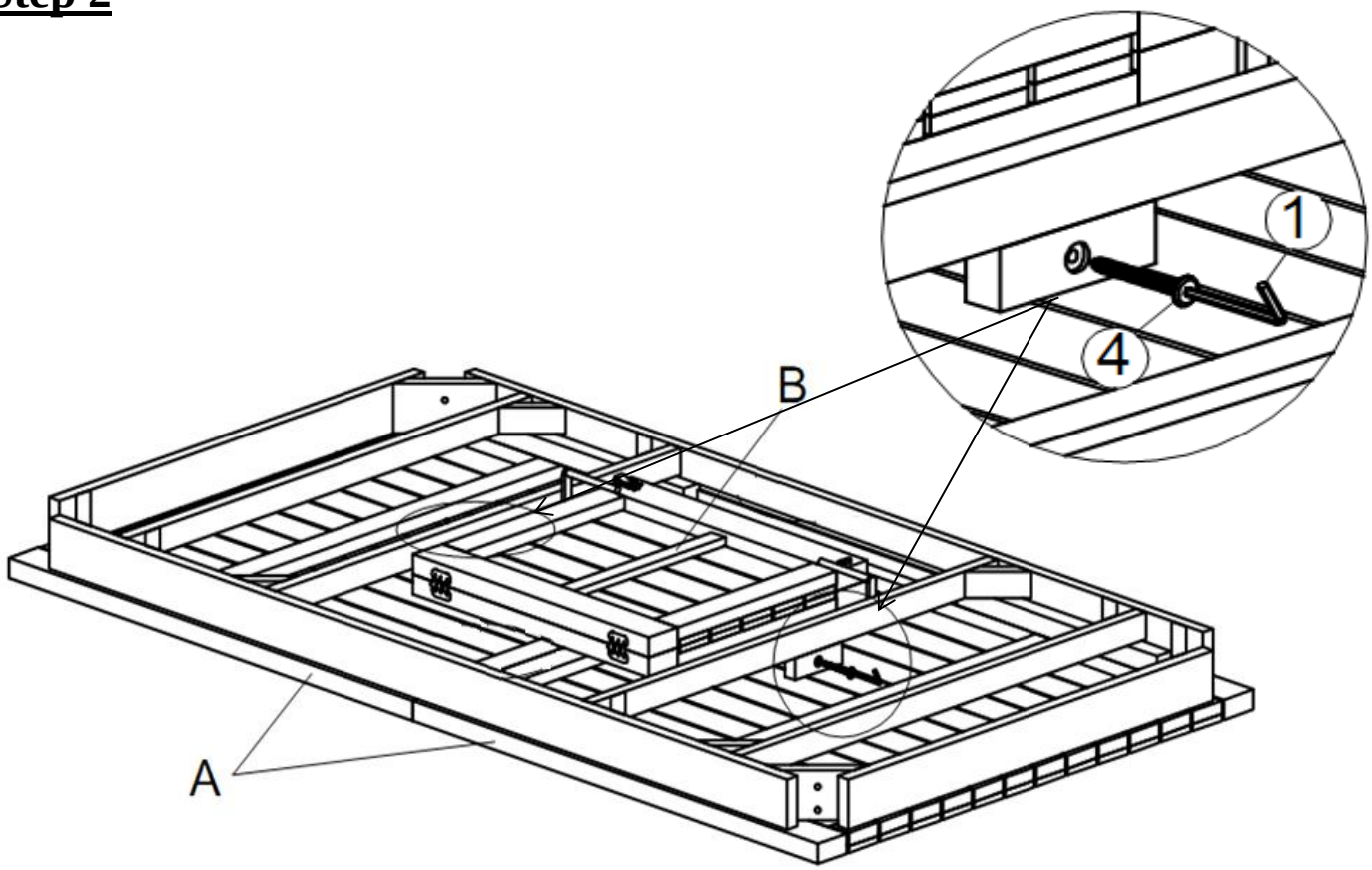

Put the Expansion Board of Table Top (B) into the Table Top (A)
Then, secure Expansion Board of Table Top (B) with Table Top (A) by using 2 Screws (④)+ Allen Wrench (①) as designated points as picture above.

Step 3

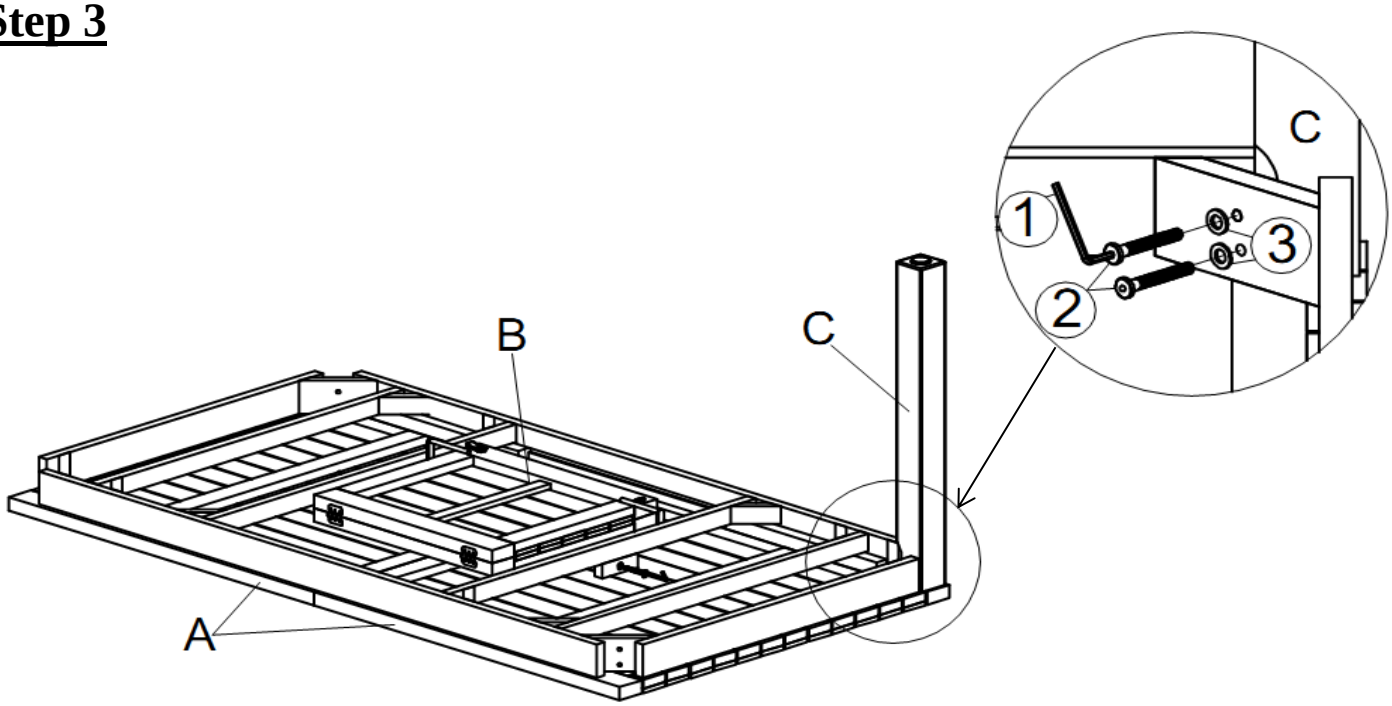

Attach one of Legs (C) to Table Top (A) by using 2 Bolts (②), 2 Washers (③) and Allen Wrench (①).
Repeat the same step for 3 remaining legs (C).

Step 4

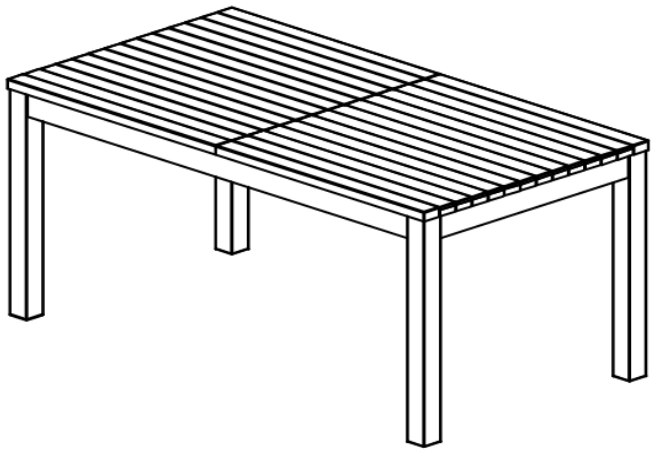

With assistance of your adult partner, carefully stand the Table up.
EXERT pressure, floorwards, onto the Table.
This pressure will help the Legs and Table Top reach alignment at all joints.
Check for wobbles.
In a sequential manner, gradually tighten all Bolts until evenly secured.
Inspect the Table and make sure all parts are adequately connected.
Your Table is ready for use.
This Table can only be used on a flat, level surface.

Extension Steps: To Extend the Table

Step 1

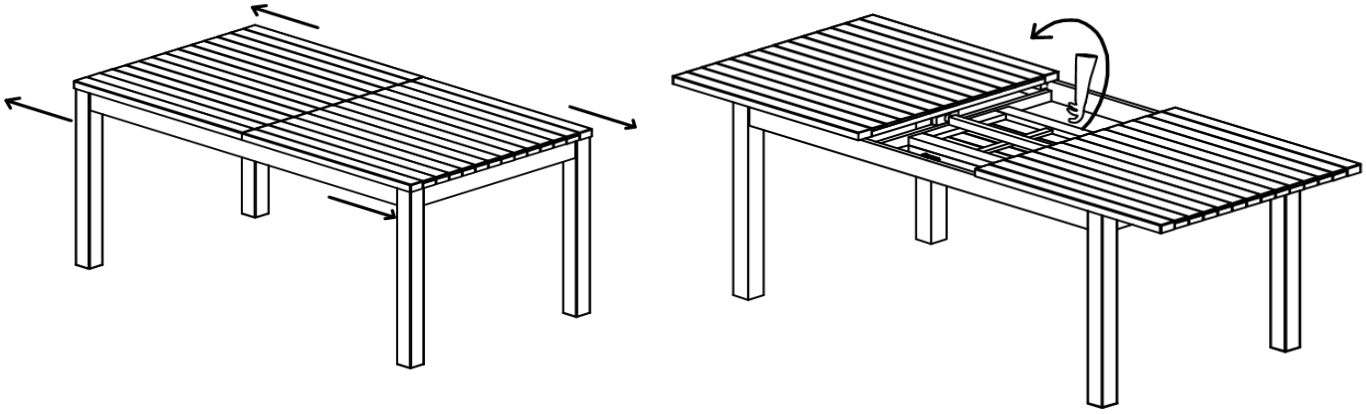

Gently pull the Table Top (A) outwards to open and stop when it could see the extension board frame support.

Caution: Do not Lean on or apply pressure to the table when it is pulled open. This could cause damage to the product.

Step 2

2.1

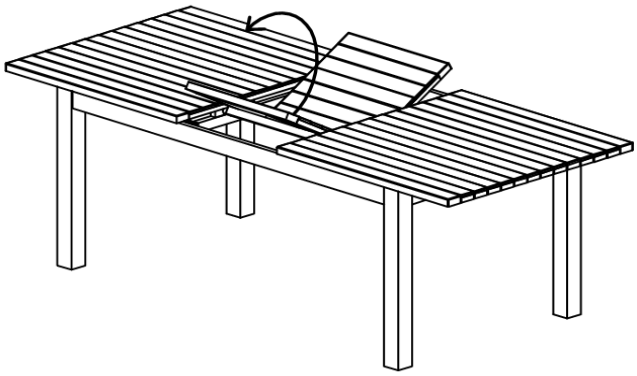

2.2

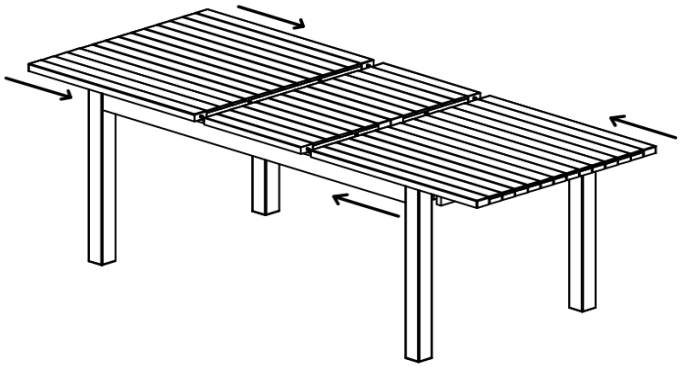

2.1) Turn the Expansion Board of Table Top (B), located inside of the table as shown above.

2.2) Push the Table Top (A) inwards until the Top Table (A) fits in the Expansion Board of Table Top (B).

Caution: Keep hands away from the Table Top (A) and Expansion Board of Table Top (B) when pushing the Table Top to avoid pinching hazards.

If you can not push the Table Top (A) inwards, Just slightly shake the Table Top (A).

Step 3

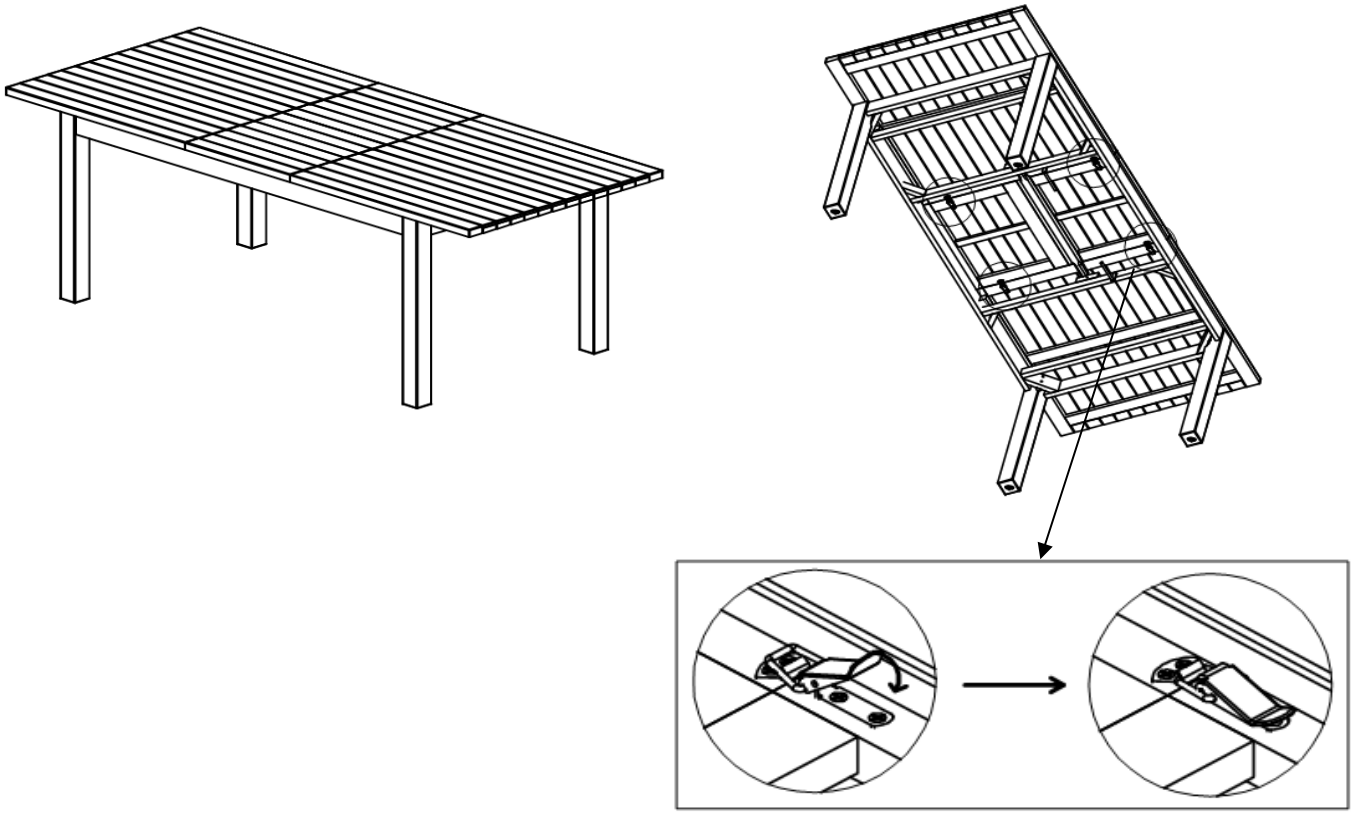

Lock the Metal Fastener under the table to lock the Expansion Board of Table Top (B) into place.

Your Table is extended and is now ready for use.

Extension Steps: To Retract the Table

Step 1

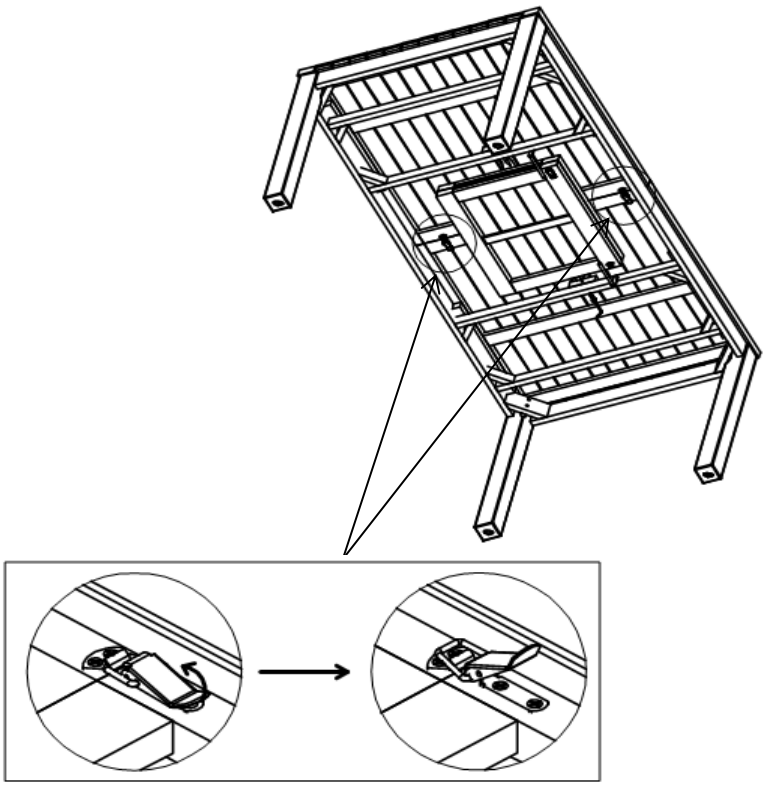

Unlock the Metal Fastener before retracting.

Step 2

2.1

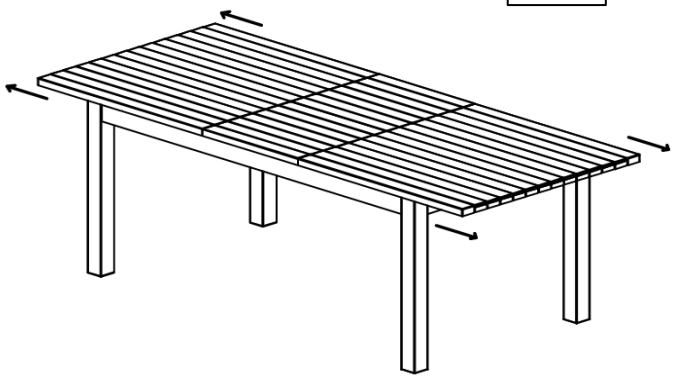

2.2

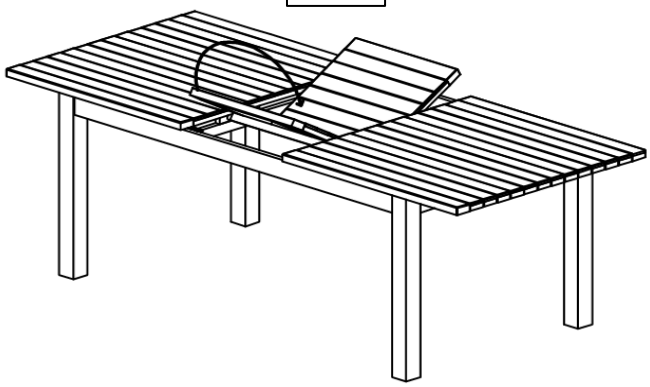

2.1) Gently pull theTop Table (A) outwards to open and stop when it could see the extension board frame support.
2.2) Turn the Expansion Board of Table Top, located inside of the table as shown above.
Caution: Do not Lean on or apply pressure to the table when it is pulled open. This could cause damage to the product.

Step 3

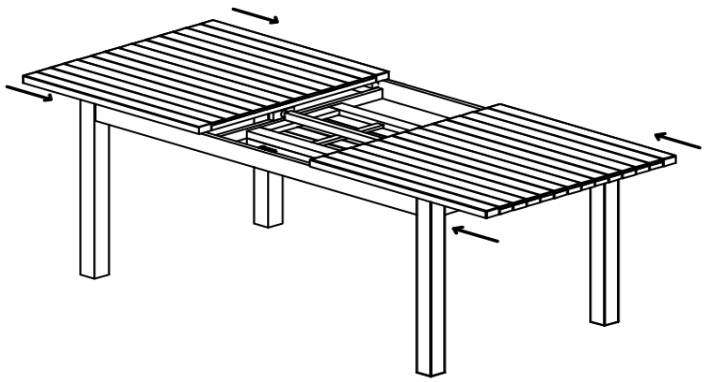

Push the Table Top (A) inwards until two wings of Table Top (A) align.
Caution: Keep hands away from the Table Top (A) and Expansion Board of Table Top (B) when pushing the Table Top (A) to avoid pinching hazards.
If you can not push the Table Top (A) inwards, Just slightly shake the Table Top (A).

Step 4

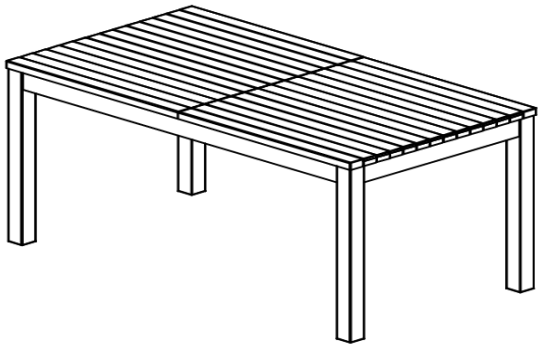

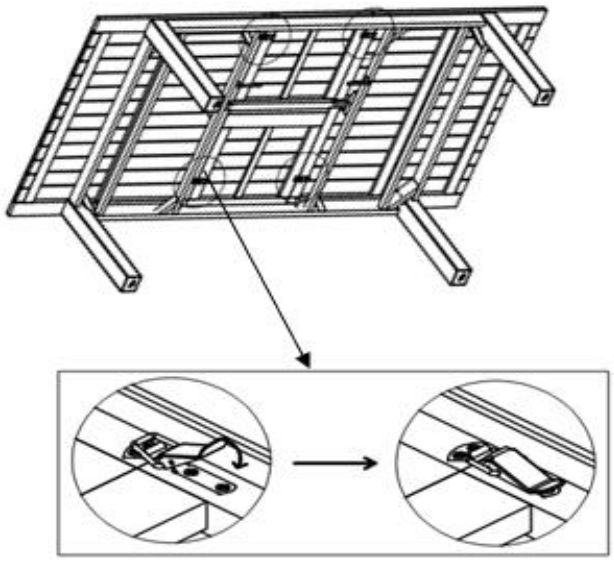

Lock the Metal Fastener under the table to lock the Expansion Board of Table Top (B) into place.
Your Table is extended and is now ready for use.

Care & Maintenance

- ⊘  • Do not put hot items directly on furniture surface.
- ⊘  • Do not clean furniture with harsh cleansers or polish.
- ✓  • To obtain the longest lifespan of your outdoor prodcts, minimizing exposure to direct sunlight is recommended.
- ⊘  • Children should not climb or jump on the furniture.
- ⊘  • Do not write on furniture without a padded barrier to protect the surface.
- ✓  • To obtain the longest lifespan of your outdoor products, avoid extended and lengthy exposure to rain, snow, and direct sunshine. Whenever possible cover the product and /or place under patio or awnings.
- ⊘  • Not for commercial use. For residential use only.
- ⊘  • Stains may be removed with mild soap solution and damp cloth.
- ✓  • Dust and pick-up spills using a clean, non-colored, lint-free cloth .