Set of Four Gift Box

ASSEMBLY INSTRUCTION

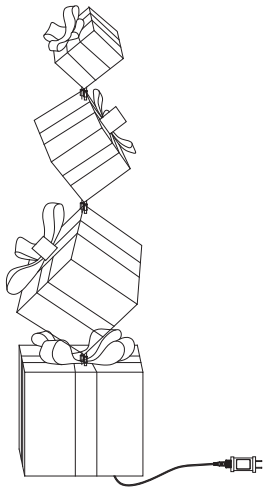

Parts List

A. BOX1	B. BOX2	C. BOX3	D. BOX4	E. METAL STAKE
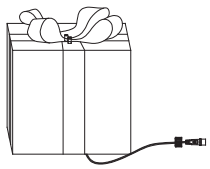				
			F. Cable ties	
				

STEP 1 Found components:A&B&C&D,Follow the direction and order indicated by the arrows in the following diagram Installation ①②③④ .

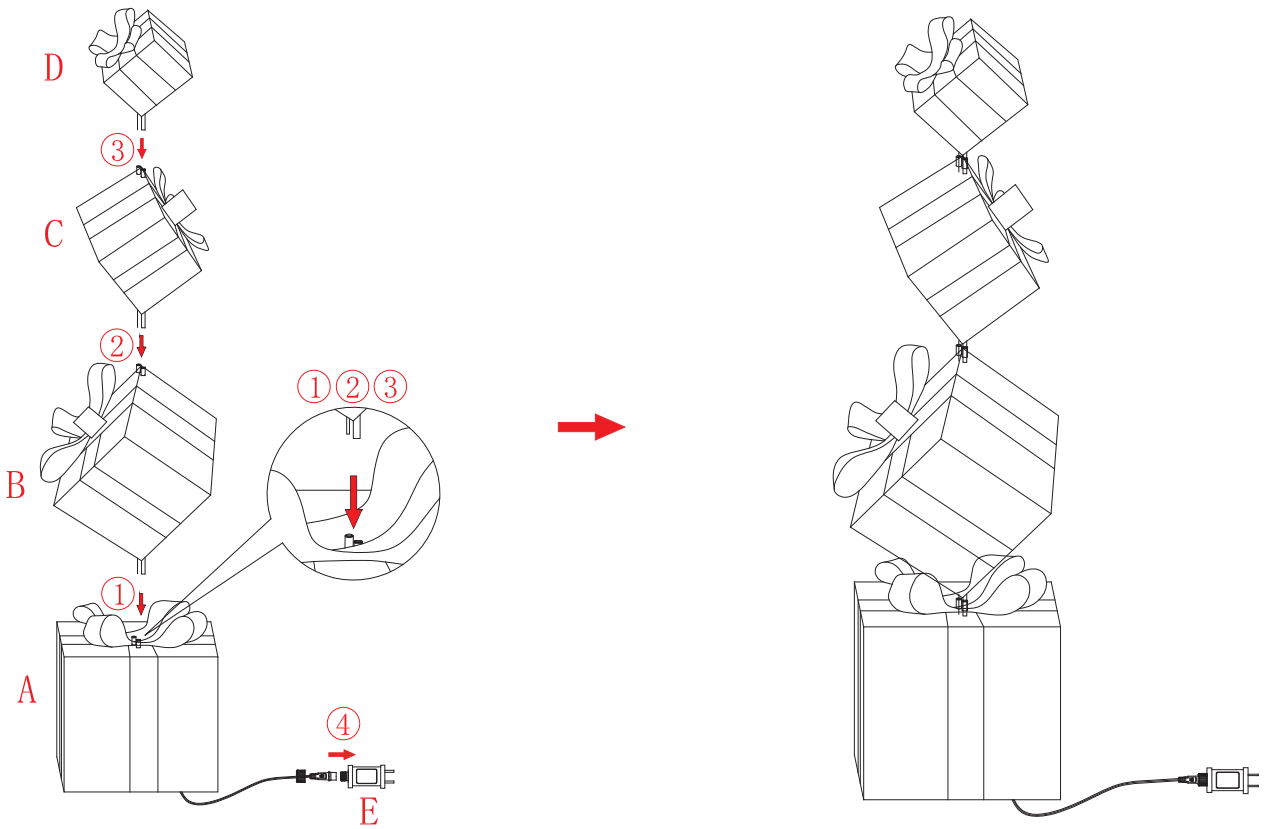

STEP 2 Found components:E, Follow the direction and order indicated by the arrows in the following diagram Installation ⑤. Plug in the power and light it up .

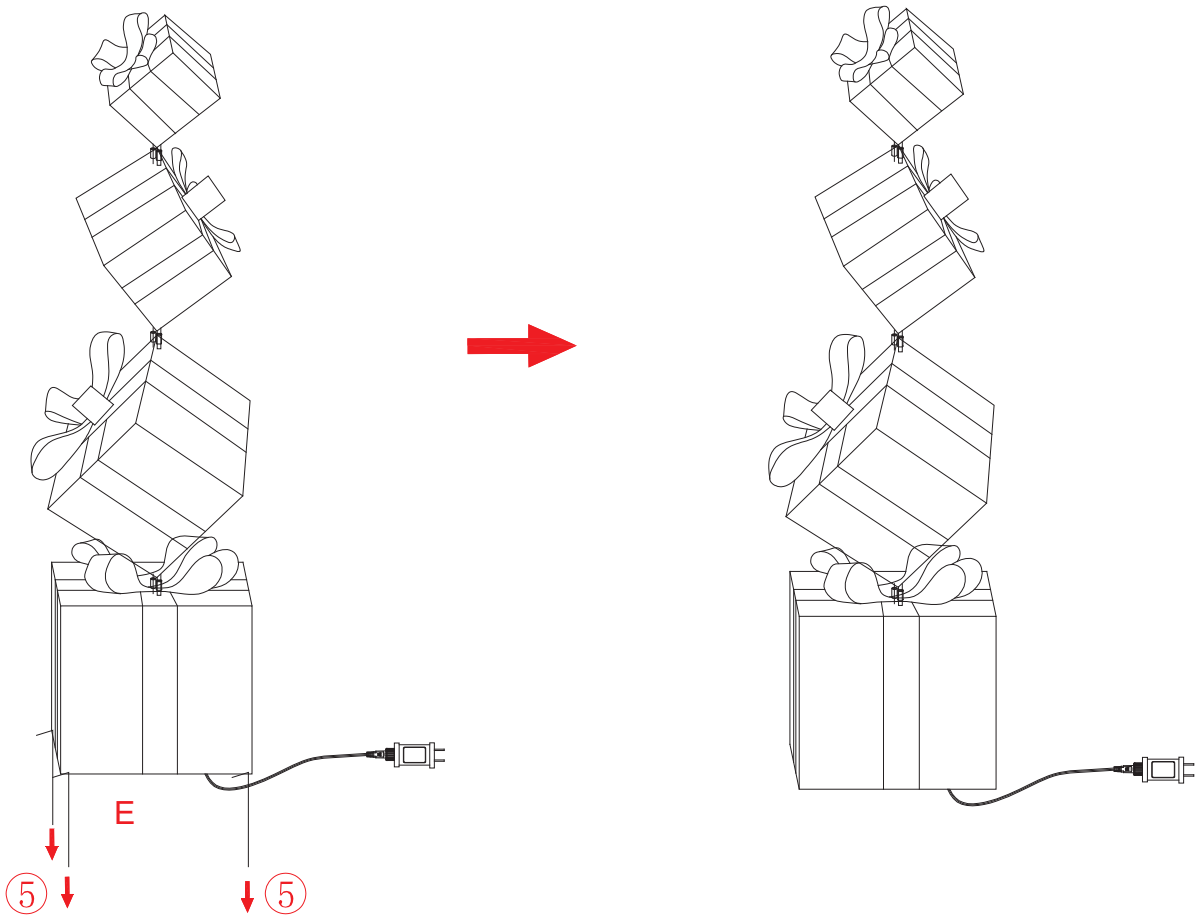

Troubleshooting

Problem	Reason	Solution
Lights do not work	Not plugged in	Fimly plug into wall outlet
	Extension cord does not have power	Plug inturn on extension cord
	Damaged adapter	Contact customer service to replace the adapter with a new one