Narrow Iron Plate Flowerpot (Set of 2)

ASSEMBLY, CARE & USE INSTRUCTIONS

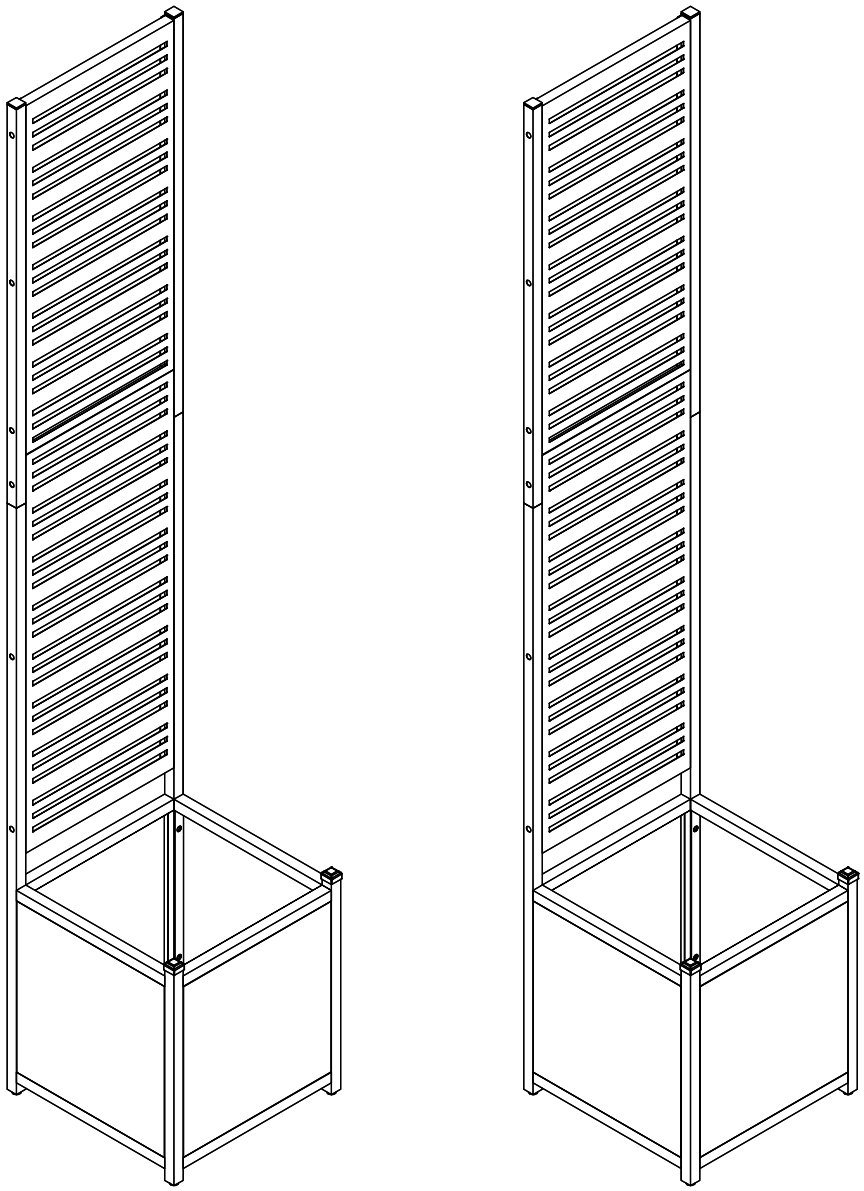

ywq26041301-3

PACKAGE CONTENTS

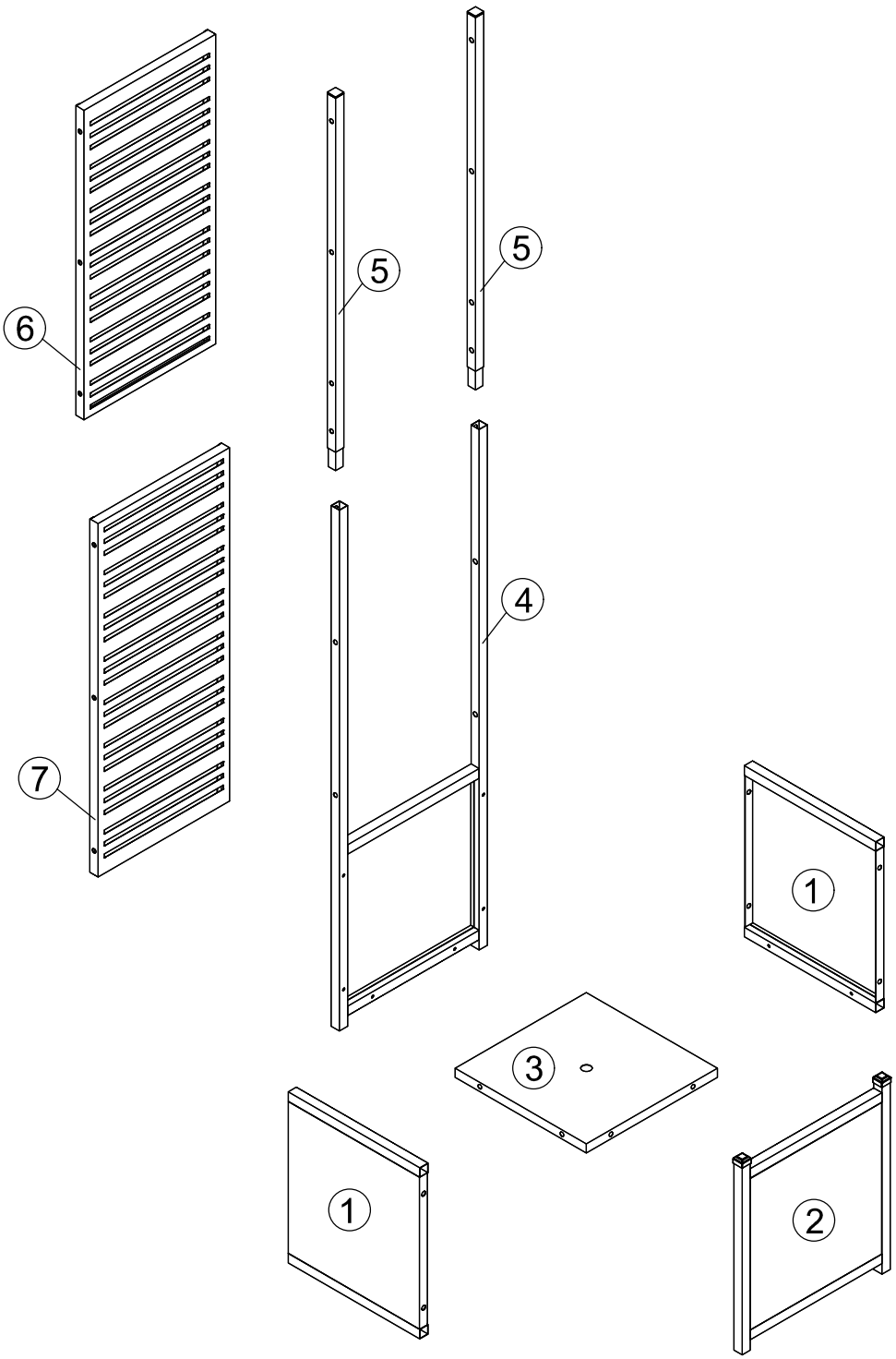

x 2

Part List

① 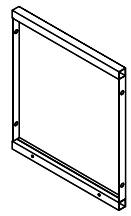 x 4	② 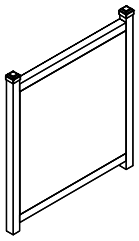 x 2	③ 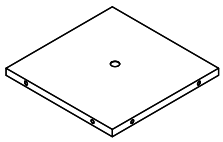 x 2	④ 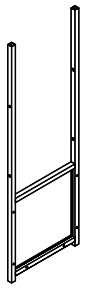 x 2
⑤  x 4	⑥ 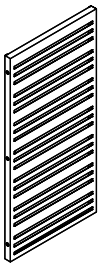 x 2	⑦ 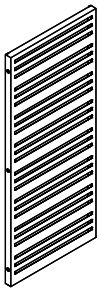 x 2	

Hardware List

A		6x10mm	Hexagonal socket screw	40+4 PCS
B		6x28mm	Hexagonal socket screw	24+2 PCS
C		M6x10	External hex nut	24+2 PCS
D		M6x15	Adjustable foot	8 PCS
E		10mm	Open end wrench	1 PC
F			Allen wrench S4	1 PC

Step 1

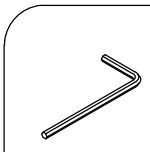

F x1

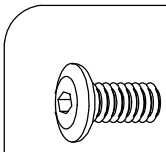

A x4

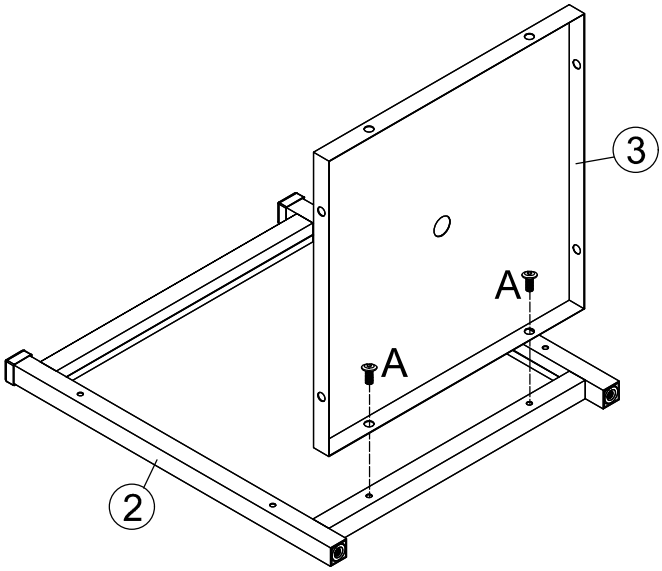

x 2

Step 2

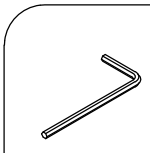

F x1

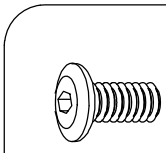

A x4

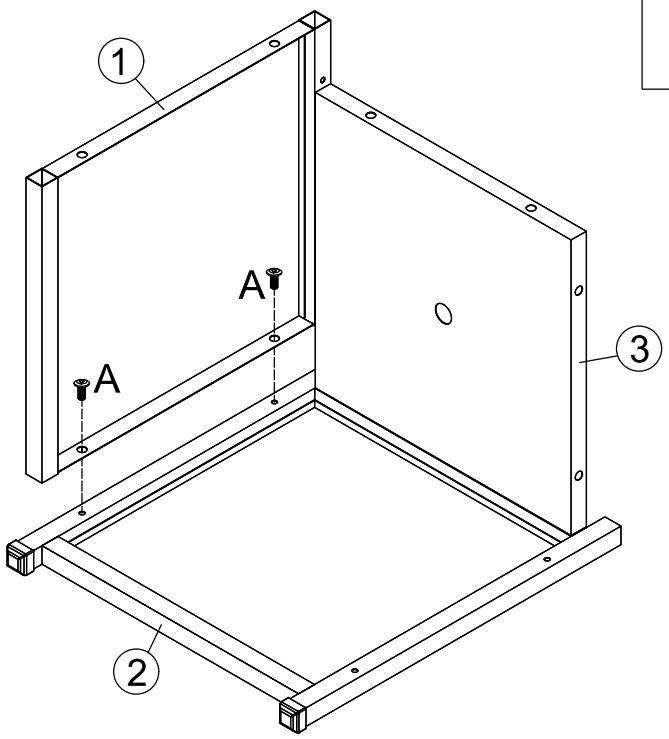

x 2

Step 3

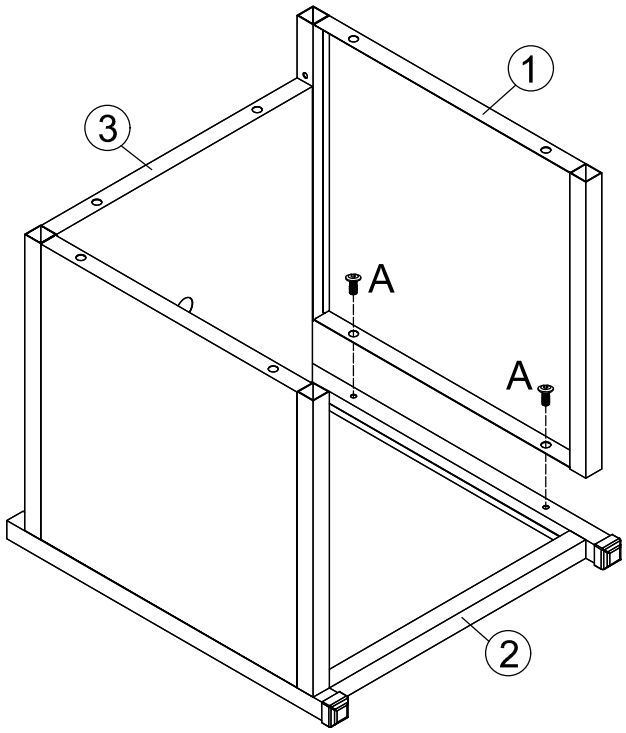

F x1

A x4

x 2

Step 4

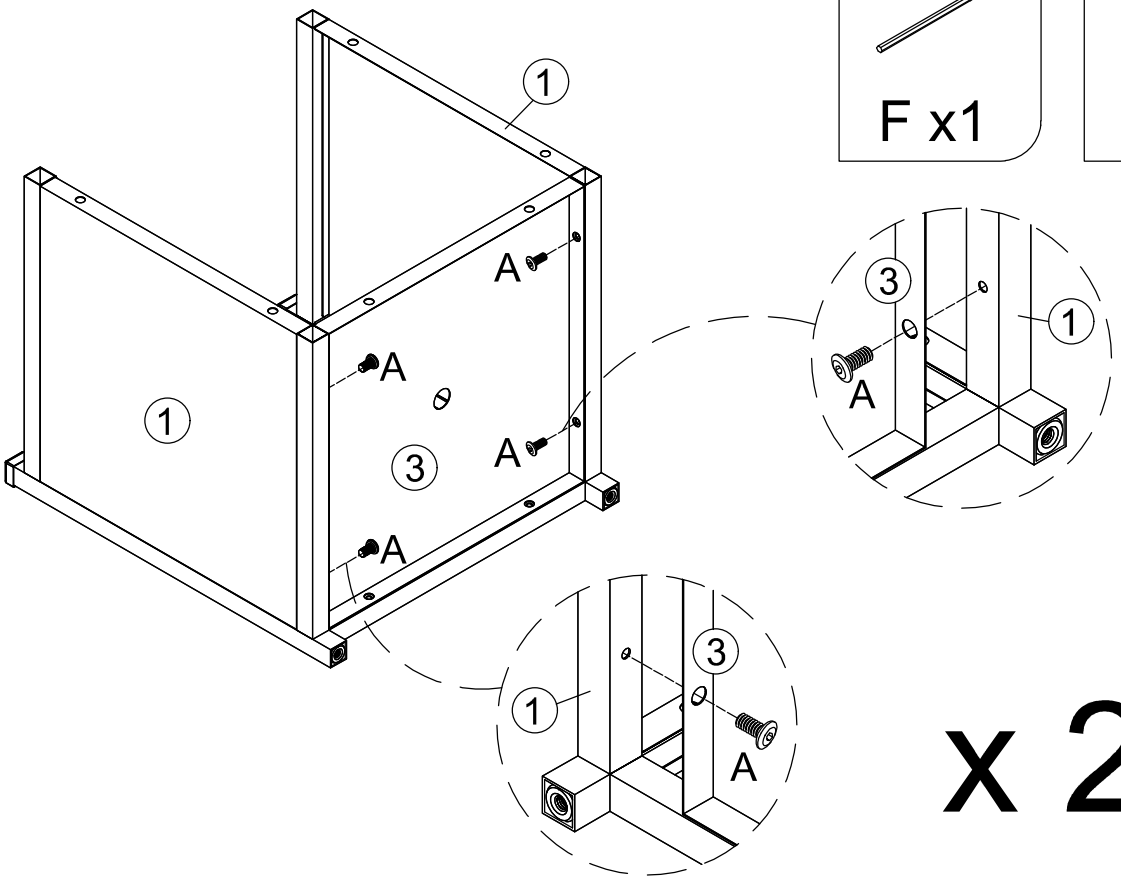

F x1

A x8

x 2

Step 5

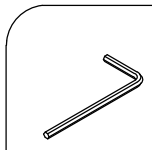

F x1

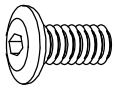

A x8

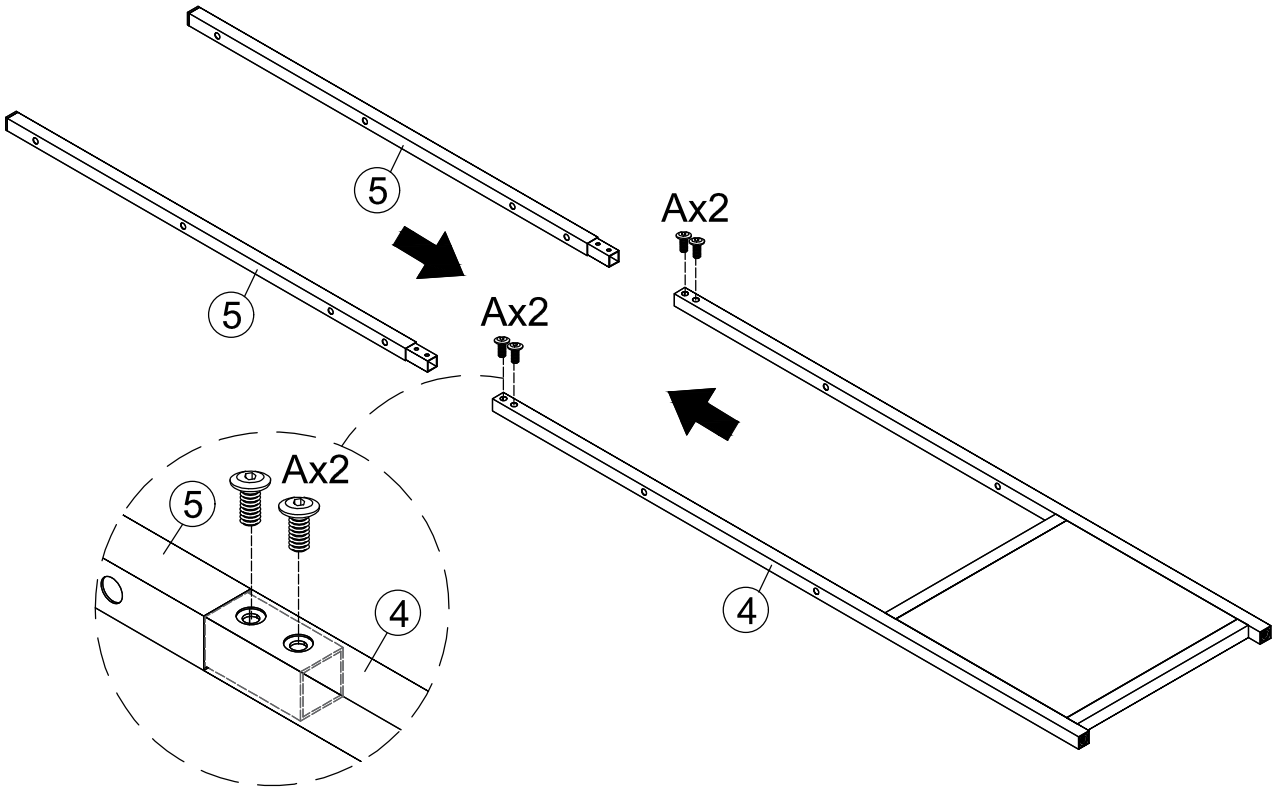

x 2

Step 6

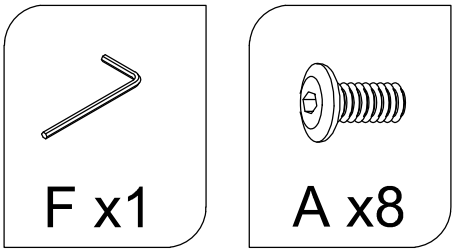

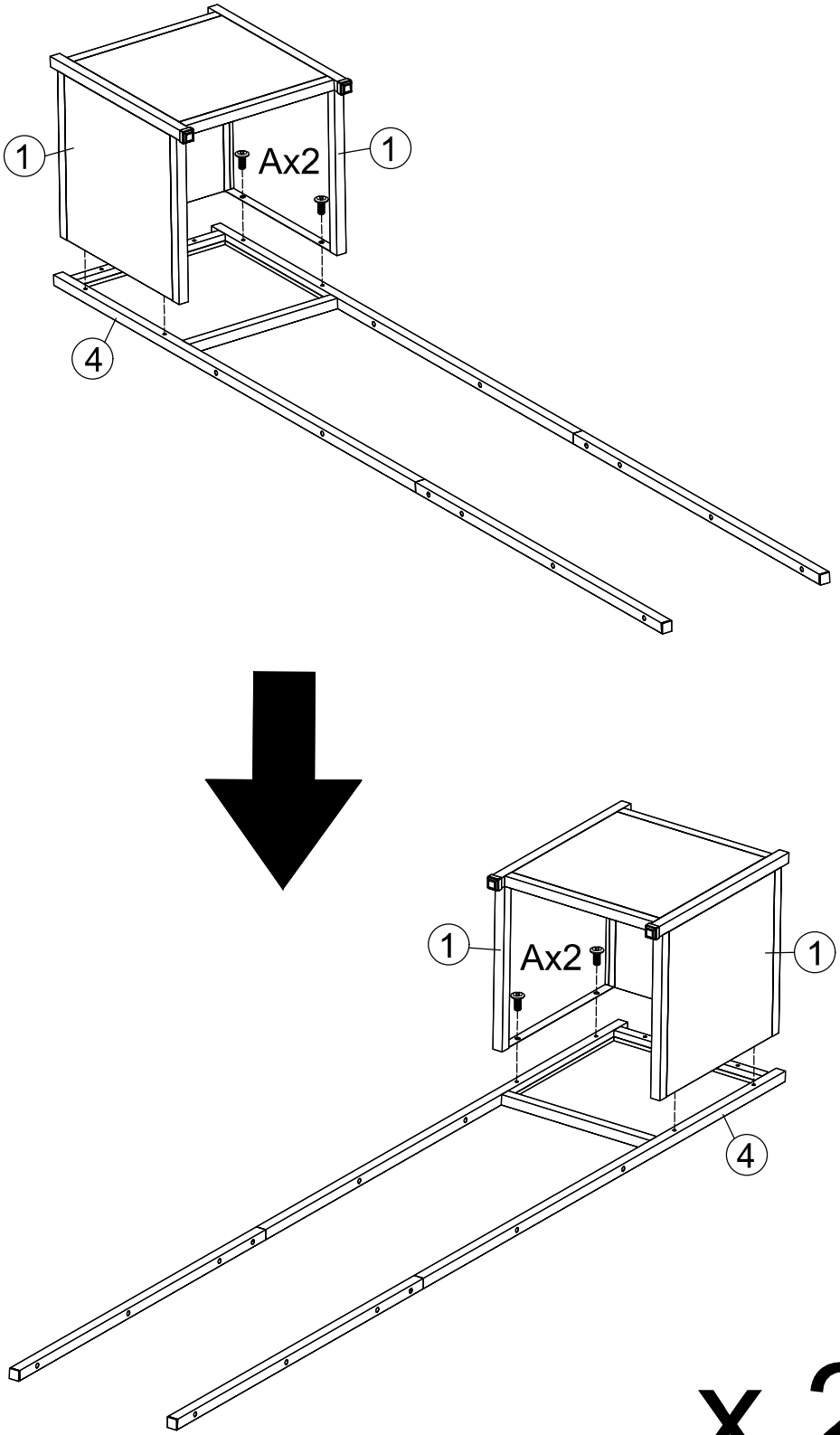

Step 7

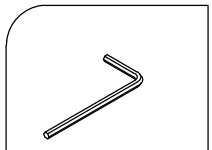

F x1

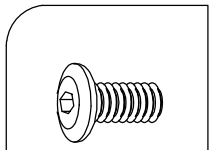

A x4

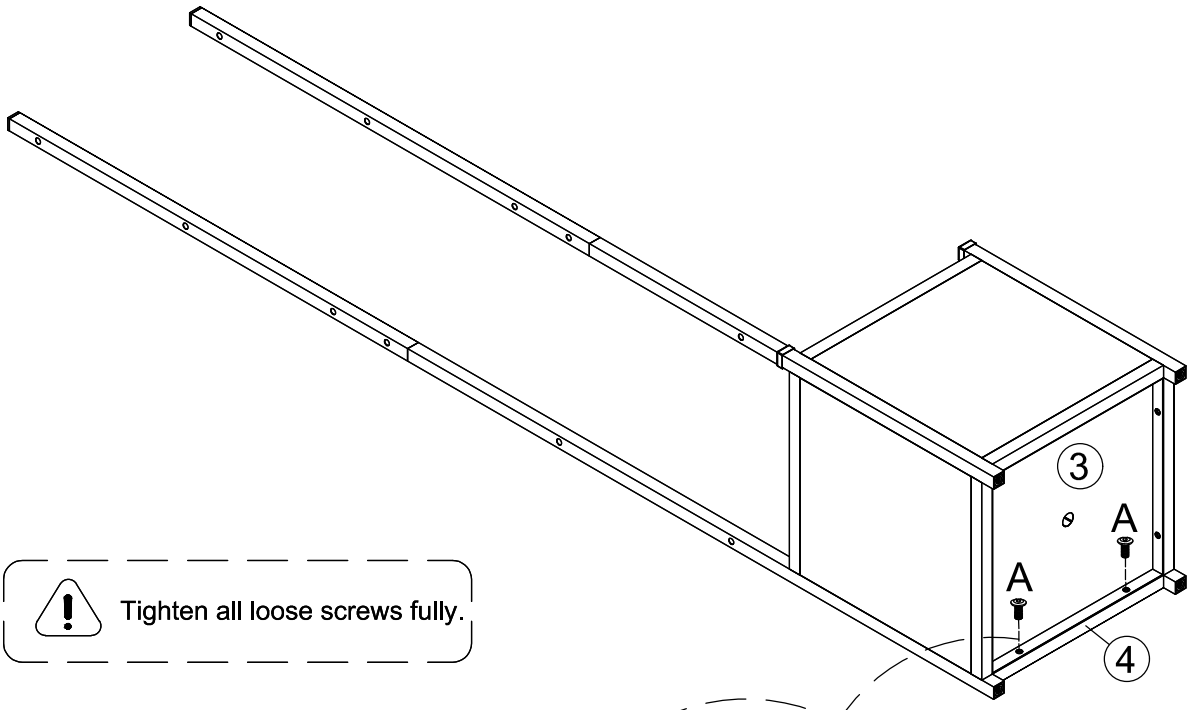

Tighten all loose screws fully.

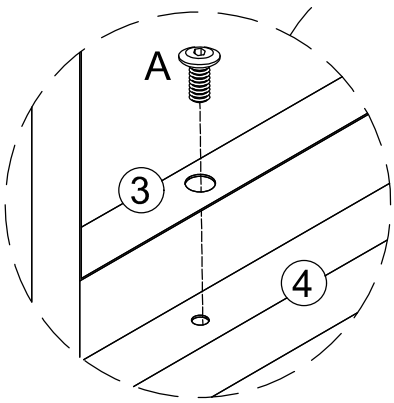

x 2

Step 8

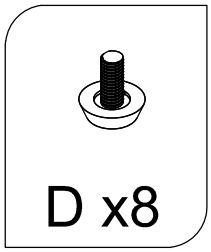

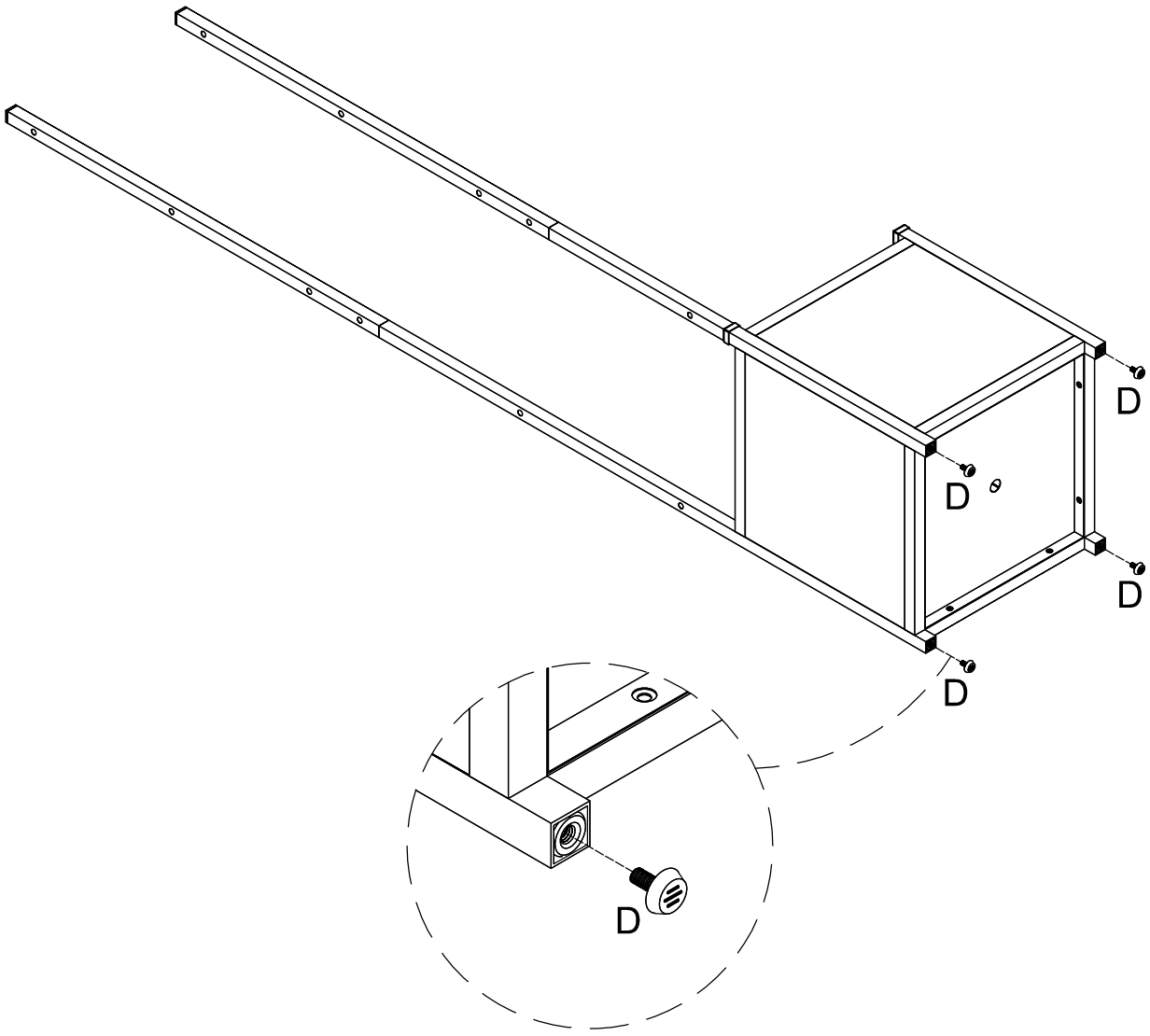

x 2

Step 9

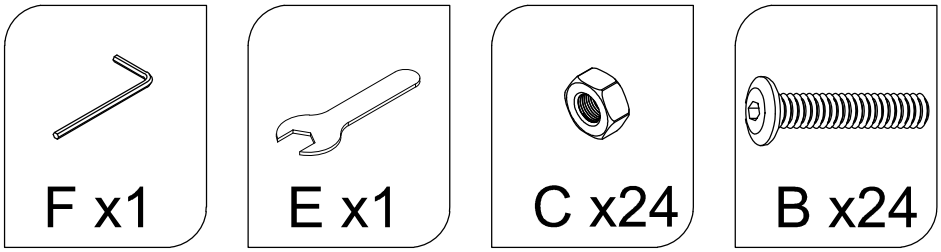

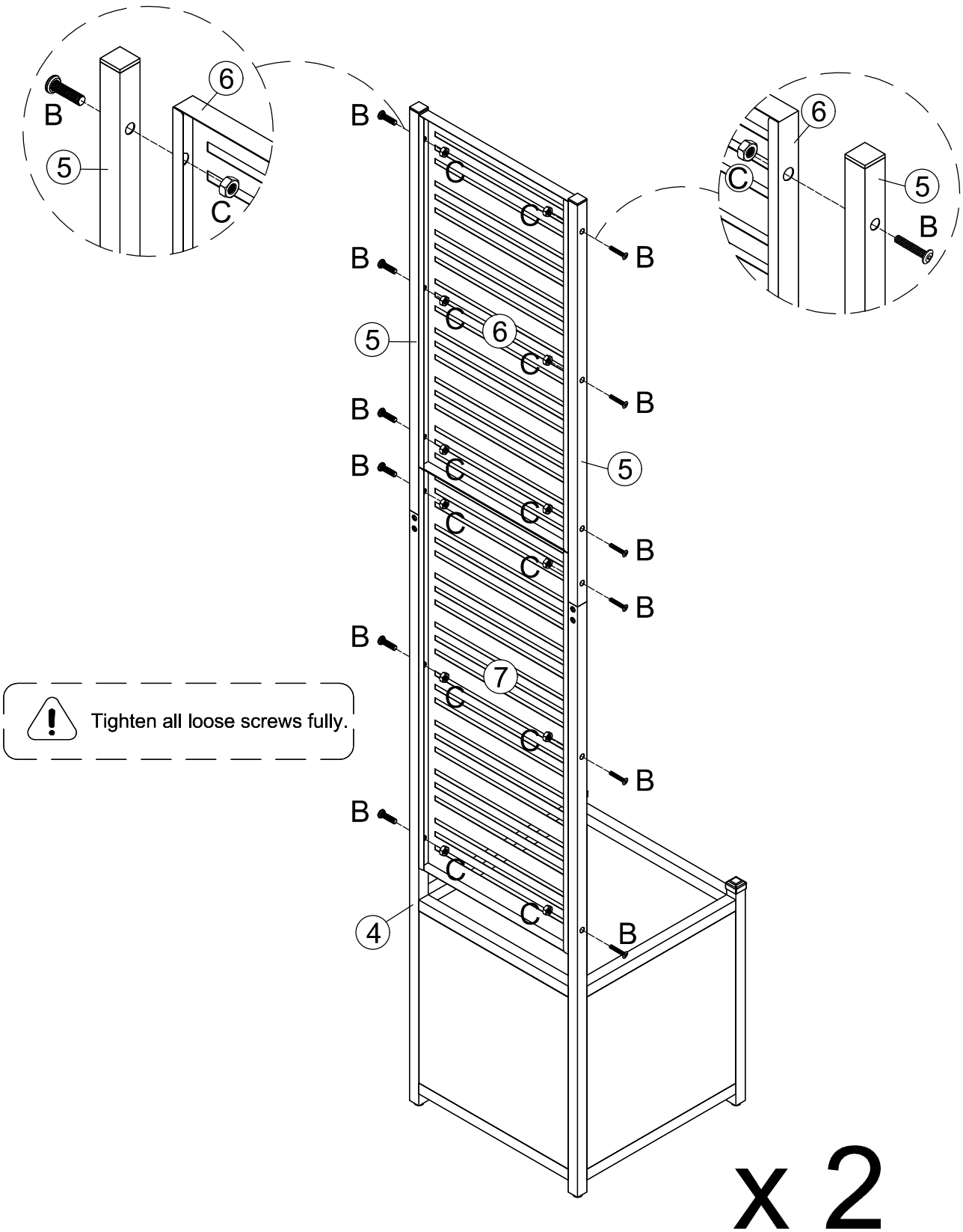

Tighten all loose screws fully.

