Barstools

Instruction Manual

BC-7117

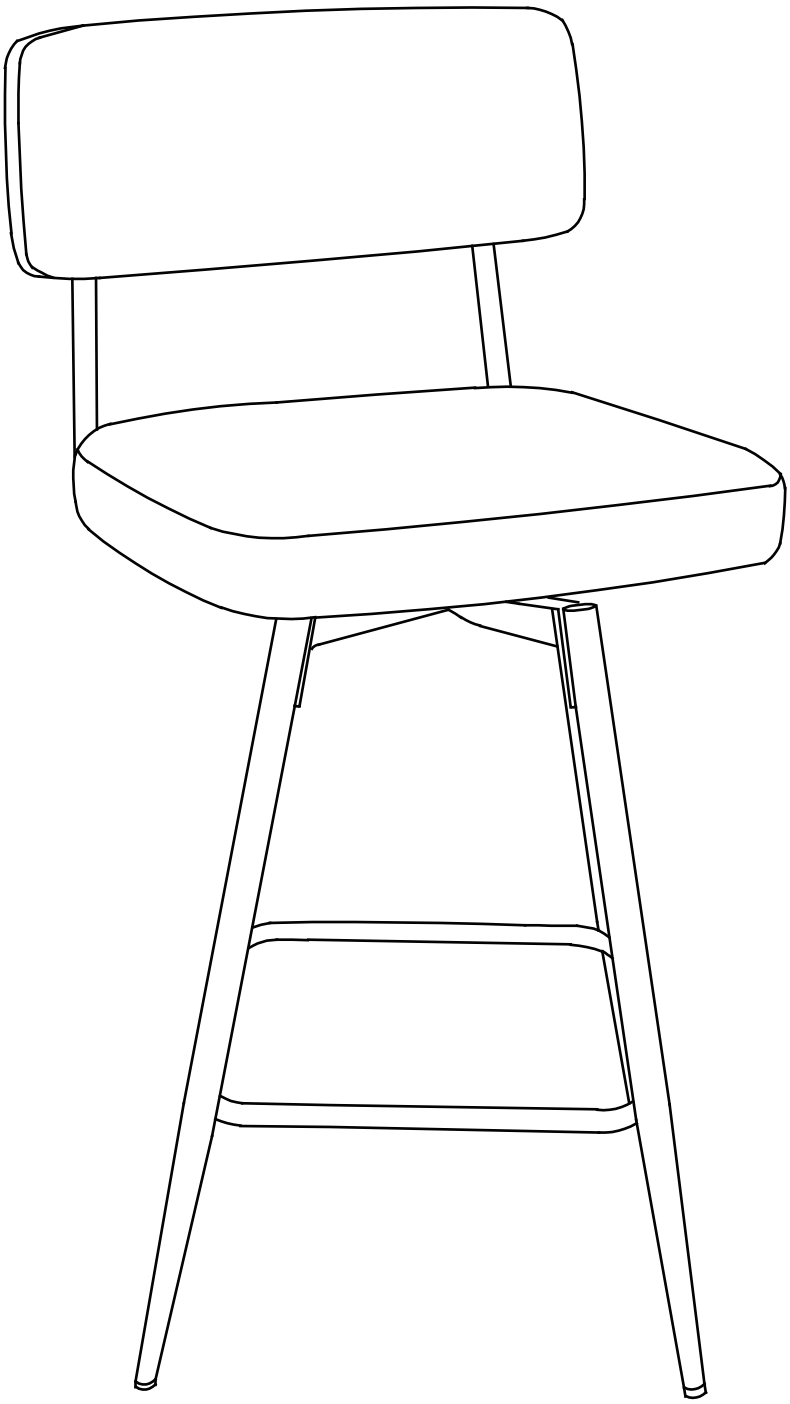

cs@cubewalk.com

+1(573) 763-2733

Guide of Manual

1. Thanks for your choice. We will do our best to provide customer service for everyone.
2. Please check to make sure all parts are included as stated when you unpack. If there are parts missing or wrong, please contact us, we will expeditiously provide reissue accessories, compensation or other services.
3. Instruction should be read carefully. But the manual may not cover every detail of all possible situations and steps. Please contact us if further information and help are needed. We will respond in a timely manner.
4. Please be patient that the other items are on the way if you buy more than one product.

Caution

1. It's kindly advised to assemble this product on a carpeted floor to protect it from being scratched.
2. Small parts are included. Please keep the product away from children while as-sembling.Do not let children play or jump on the product.Do not stand on the item or use as a step ladder.
3. Please pay attention to the sharp corners during assembly.We recommend the use of gloves to prevent the undesired injury.
4. Prior to use, please check to see if there's any loosening screw or part. Make sure that each screw and part is correctly installed and securely fastened.
5. It's unnecessary to use electric drill. Please at a low gear if you need.

Customer Service e-mail: cs@cubewalk.com

Care and Maintenance

- Use a soft, clean cloth that will not scratch the surface when dusting.
- There' s no need to use furniture polish. If you need, test it first in an inconspicuous area.Using solvents of any kind on your furniture may damage the finish. Never use water to clean your furniture as it may cause damage to the finish.
- Liquid spills should be removed immediately. Gently blot the spill with a soft clean cloth to avoid rubbing.

Further Advice about the Furniture Care

- It is best to keep your furniture in a climate-controlled environment.
- We recommend to keep furniture from sunlight exposure to avoid possible surface damage.
- Following these important and helpful tips will help retain your furniture's performance even whèn it ages.
- Periodically (every 90 days) make sure the screws are fully tightened.

Max Weight Capacity

- 300lbs[Do not stand on the item]

Accessories List

(A) Backrest×1

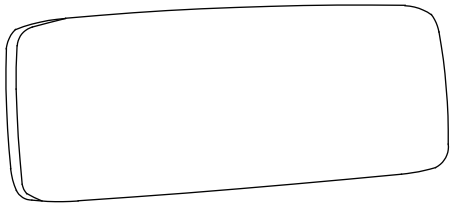

(B) Seat Cushion×1

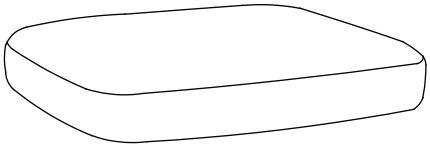

(C) Connector Bar

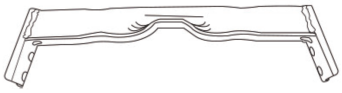

(D) Connector Bar



(E) Mechanism

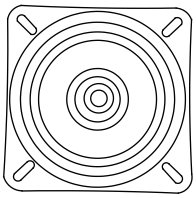

(F) Footrest

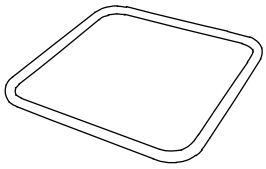

(G) Stool leg*4pcs

(H) Backrest connecting rod

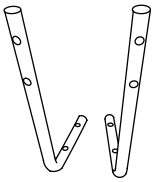

(I) Bolt*4pcs
M6x35mm

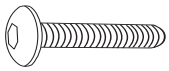

(J) Bolt*4pcs
M6x16mm



(K) Bolt*13pcs
M6x25mm

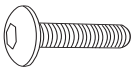

(L) Bolt*4pcs
M6x30mm



(M) Bolt*4pcs
M6x35mm



(N) Allen Key M6



An L-shaped hex wrench can tighten screws more effectively. It is recommended to use it on the last few turns of each screw.

Step 1

Stack (C) Connector Bar and (D) Connector Bar as shown in the diagram, ensuring that D is on top of C. Use (N) Allen Key to tighten 1pc (K) Bolt M6*25 (tighten to 80%).

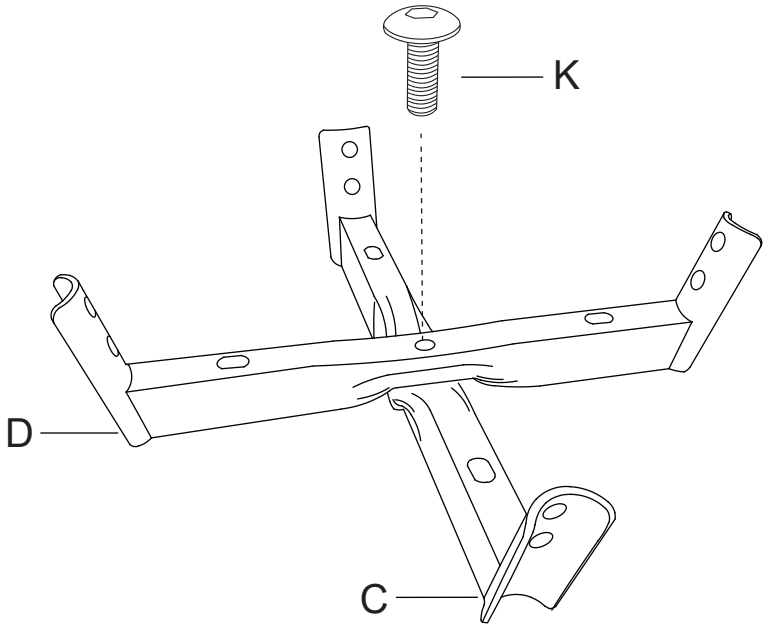

(K) Bolt M6x25mm*1pcs

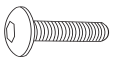

Step 2

Align (G) Stool Legs *4pcs with the side holes of Connector Bars. Use (K) Bolt M6*25*8 pcs to fasten them (tighten to 80%).

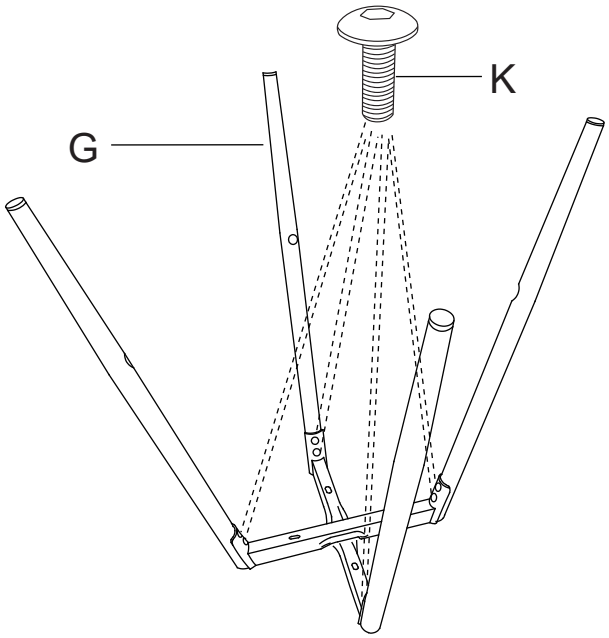

(K) Bolt M6*25*8pcs



Step 3

Align (F) Footrest with the holes on the (G) Stool Legs. Use (K) Bolt M6*25*4pcs to fasten them (tighten to 80%).

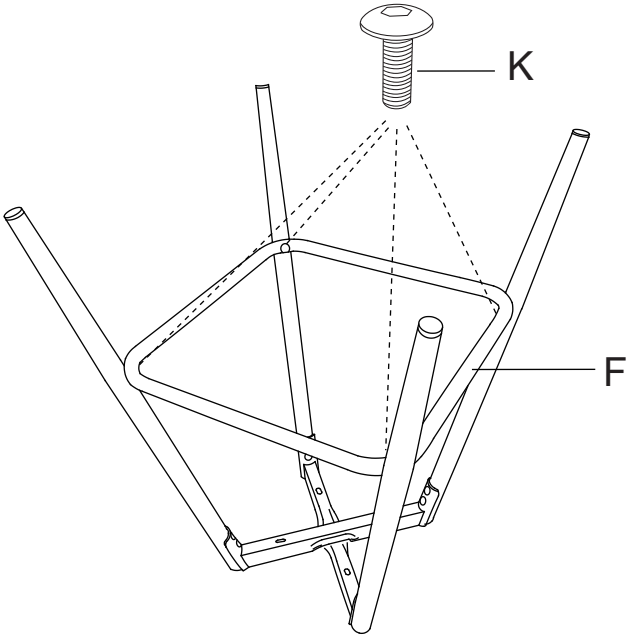

(K) Bolt M6*25*4pcs



Step 4

Align (E) Swivel mechanism with the holes of the Connector Bars. Use (I) Bolt M6*35*4pcs to fasten it (tighten to 100%). Then fully tighten all previously loose screws to 100%.

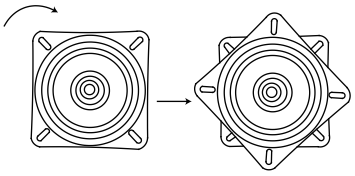

Rotate the (E) mechanism to the following position.

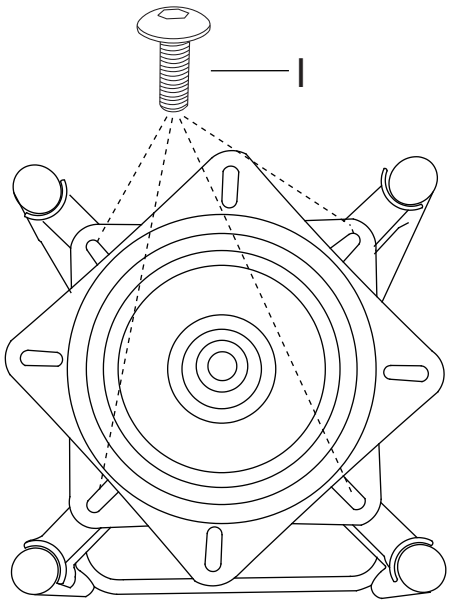

(I) Bolt M6*35*4pcs

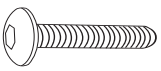

Step 5

Align (H) Back pole with the holes on the (A) Backboard. Use (L) Bolt M6*30*4pcs to fasten them(tighten to 80%).

Please install the backrest in the direction of the up arrow

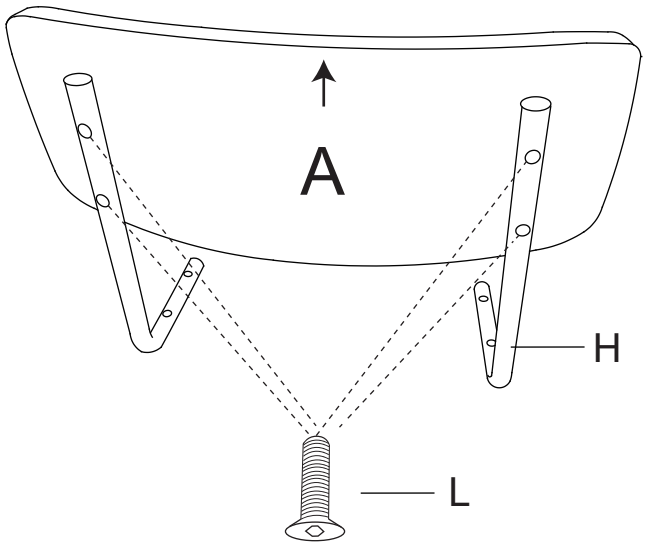

(L) Bolt M6*30*4pcs

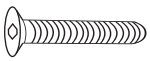

Step 6

Align (H) Back pole with the holes on the (B) Seat. Use (M) Bolt M6*35*4pcs to fasten them (tighten to 80%) .

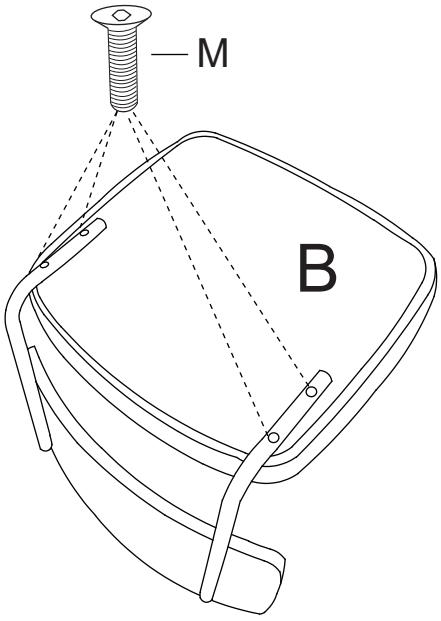

(M) Bolt M6*35*4pcs



Step 7

Align (B) Seat with the center holes of the swivel mechanism. Use (J) Bolt M6*16*4pcs to fasten it (tighten to 100%).

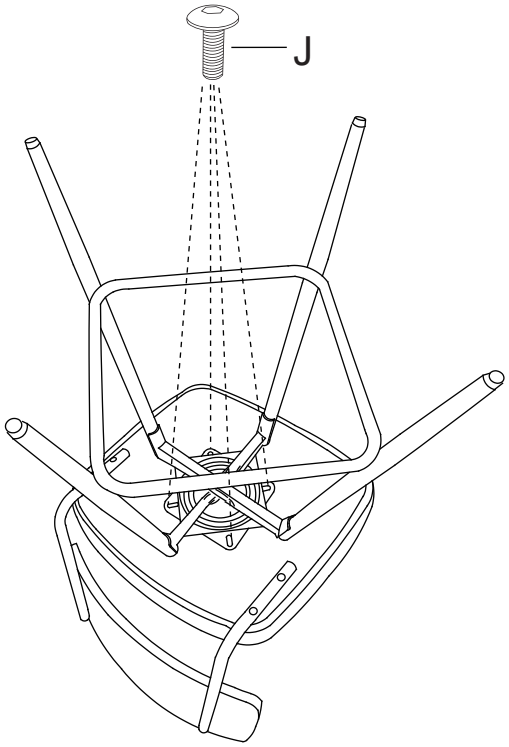

(J) Bolt M6*20*4pcs



Step 8

Tighten all previously loose screws to 100%.

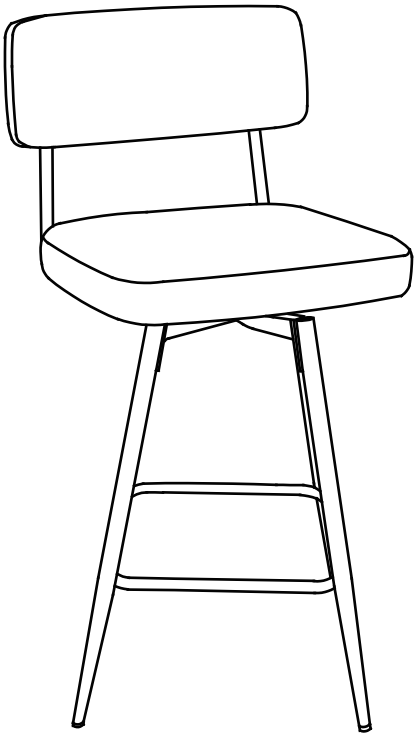

Safety Information



INSTRUCTION MANUAL

Model: 7117

cs@cubewalk.com

+1(573) 763-2733