ASSEMBLY INSTRUCTION

SUNLOUNGE SET

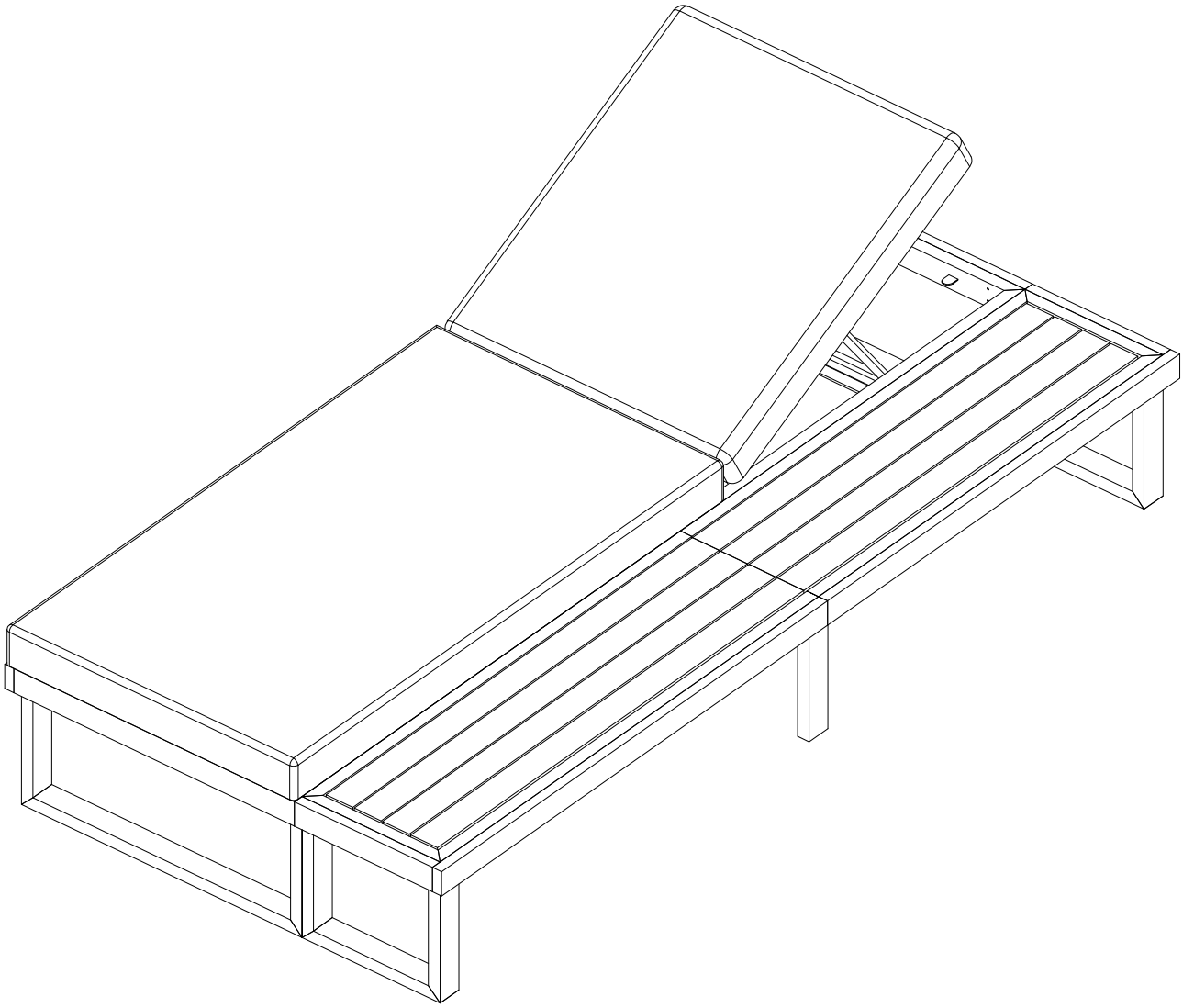

Notice:

1. 50% Tighten before fixing all screws, Allen wrench is recommended instead of an electric drill.
2. Place the item on a flat ground to adjust and make sure it remains stable.
3. Tighten up all screws with tools gradually.
4. If the screws are not aligned with holes during assembly, please loosen all the other screws to 50% and continue the assembly process.
5. If the item is not stable, please loosen all the screws, adjust it on a flat ground and tighten up all screws again.
6. Note : If one or some screws are fully tightened during assembly, chances are the others will not be aligned with holes. In addition, all the holes are designed to be relatively larger to provide more space for the adjustment of the screws.

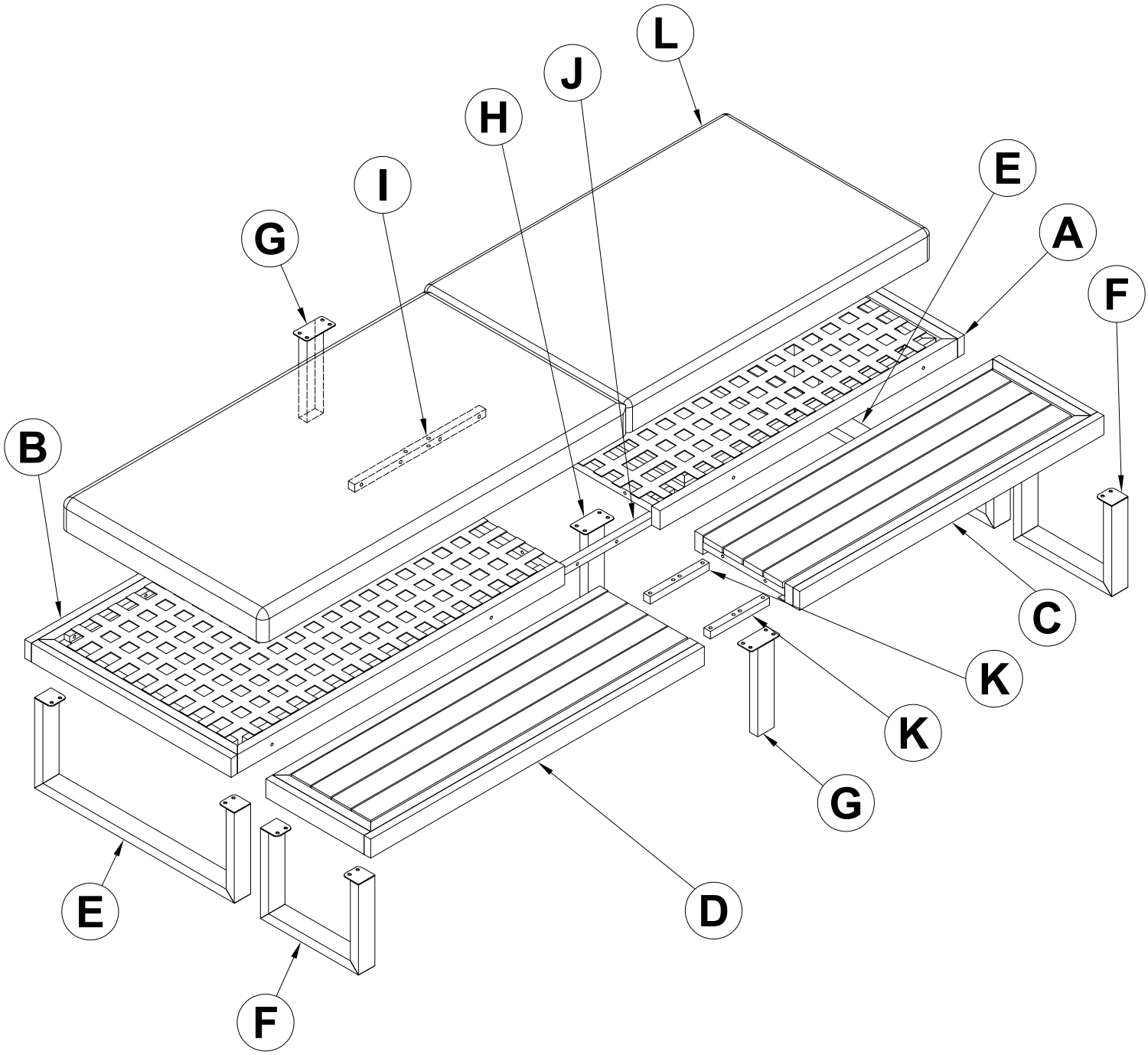
L
J
H
I
E
G
A
F
B
C
K
K
G
E
D
F

Parts List :

A

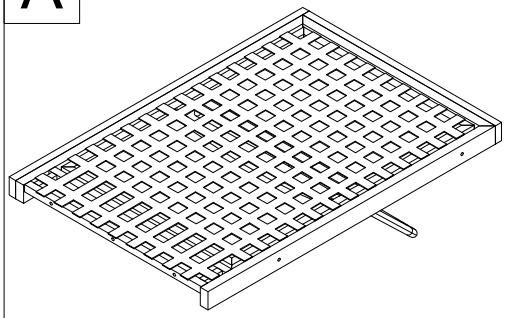

Seat Bench (1 pc)

B

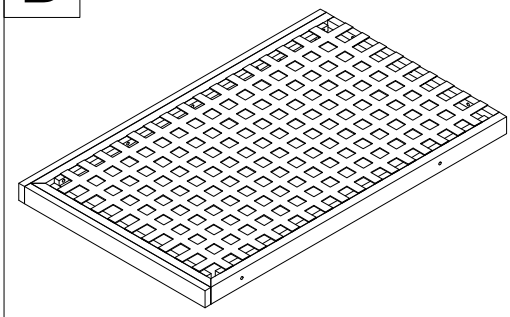

Seat Bench (1 pc)

C

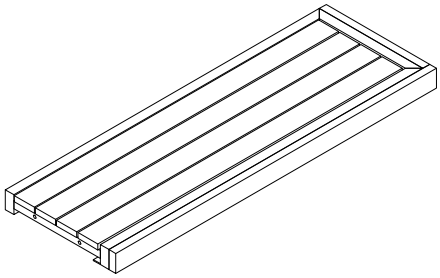

Wooden Seat Bench (1 pc)

D

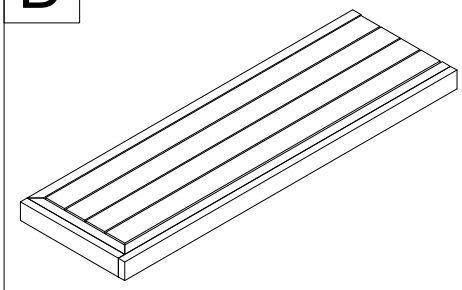

Wooden Seat Bench (1 pc)

E

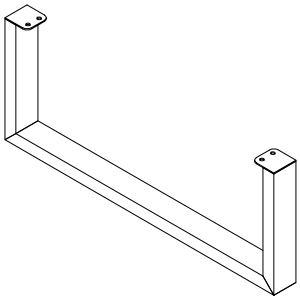

Large Leg (2 pcs)

F

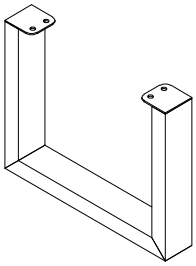

Small Leg (2 pcs)

G

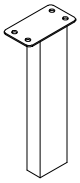

Support Leg (2 pcs)

H

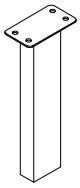

Middle Support Leg (1 pc)

I

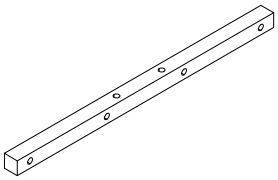

Connection Bar (1 pc)

J

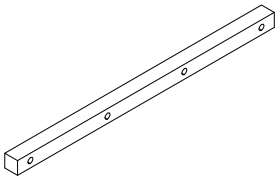

Connection Bar (1 pc)

K

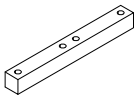

Connection Bar (2 pcs)

L

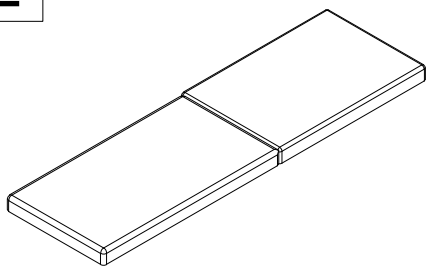

Seat Cushion (1 pc)

Hardware :

1 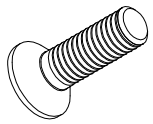 Bolt M6x20 (28 pcs) Extra (2 pcs)	2 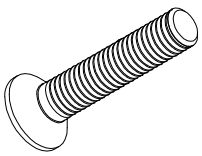 Bolt M6x35 (21 pcs) Extra (2 pcs)	3 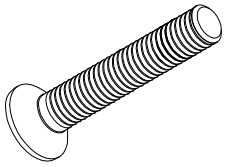 Bolt M6x40 (4 pcs) Extra (1 pc)	4 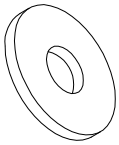 Flat Washer M6 (53 pcs) Extra (5 pcs)
5 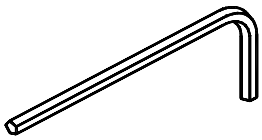 Allen Wrench (2 pcs)			

CARTON CONTENT

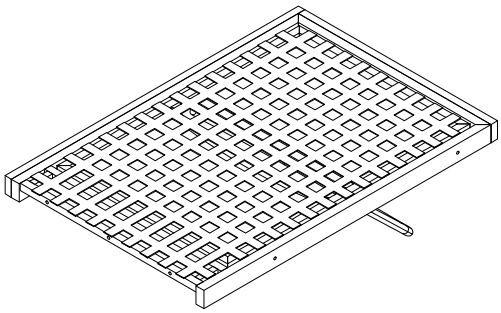

A x1

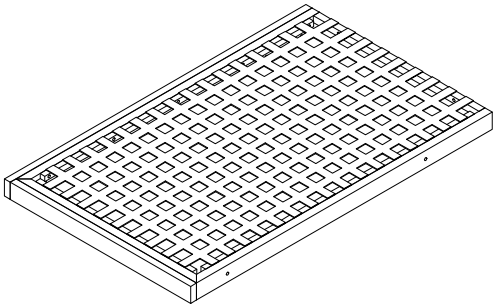

B x1

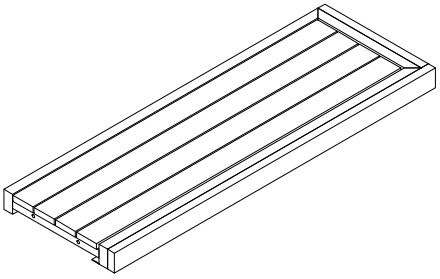

C x1

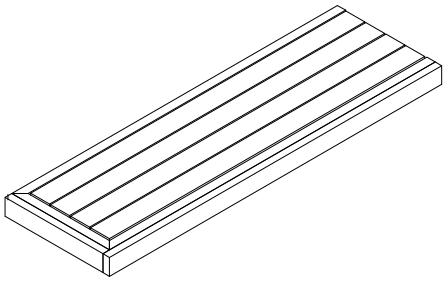

D x1

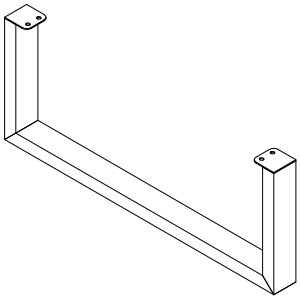

E x2

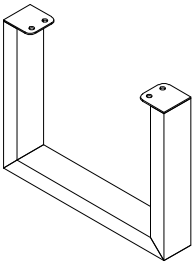

F x2

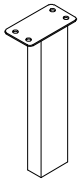

G x2

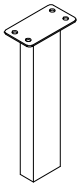

H x1

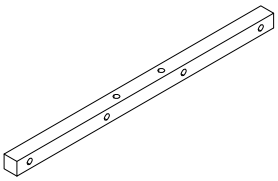

I x1

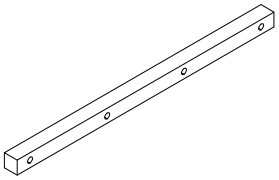

J x1

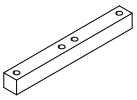

K x2

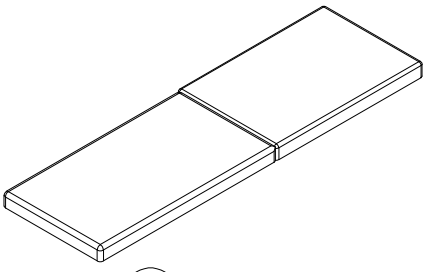

L x1

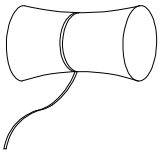

Hardware

STEP 1

C x1

D x1

2 x2

4 x2

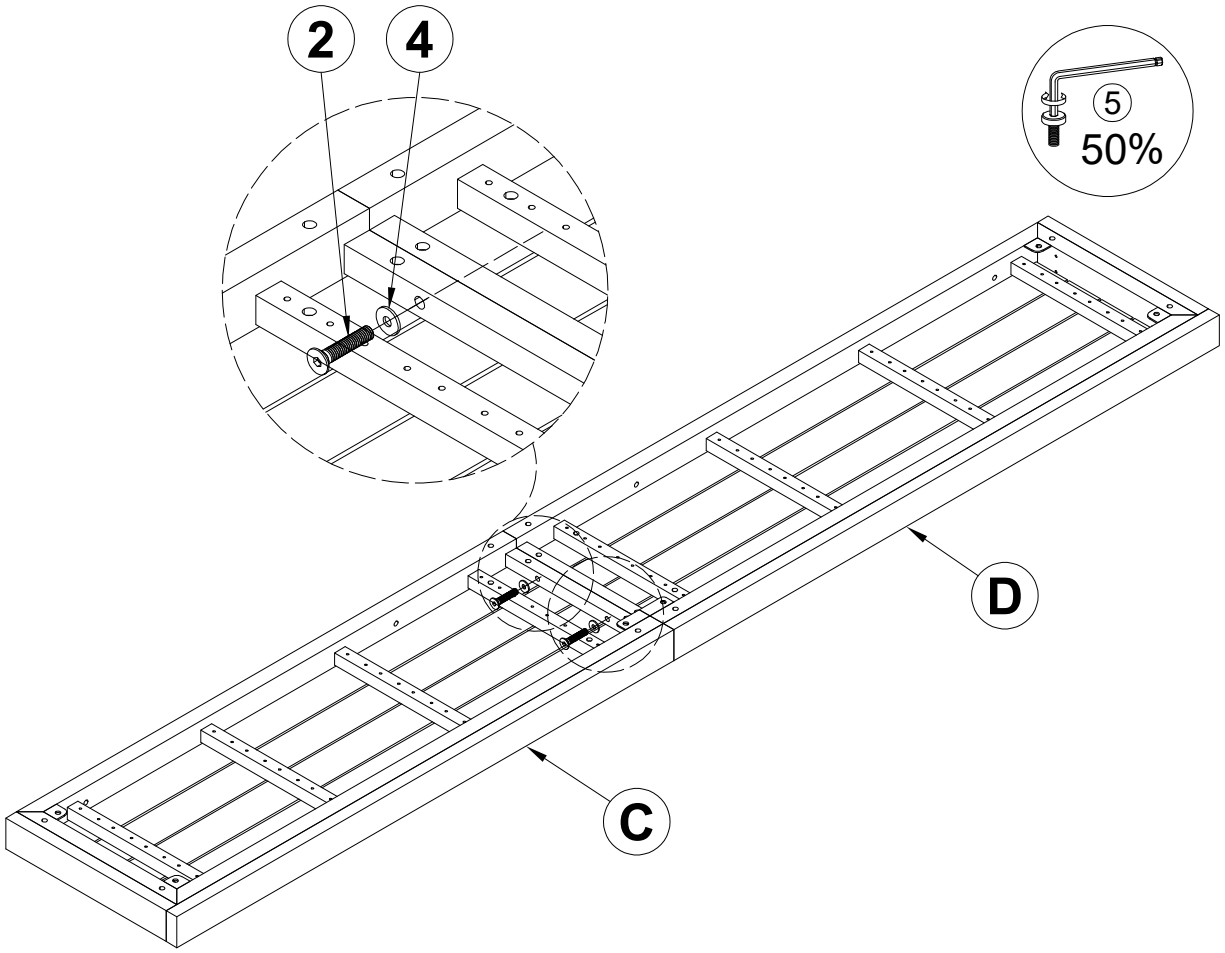

Connect Wooden Seat Bench (C) & (D), tighten Bolt (2) & flat washer (4) with Allen Wrench (5).

STEP 2

K x2

2 x8

4 x8

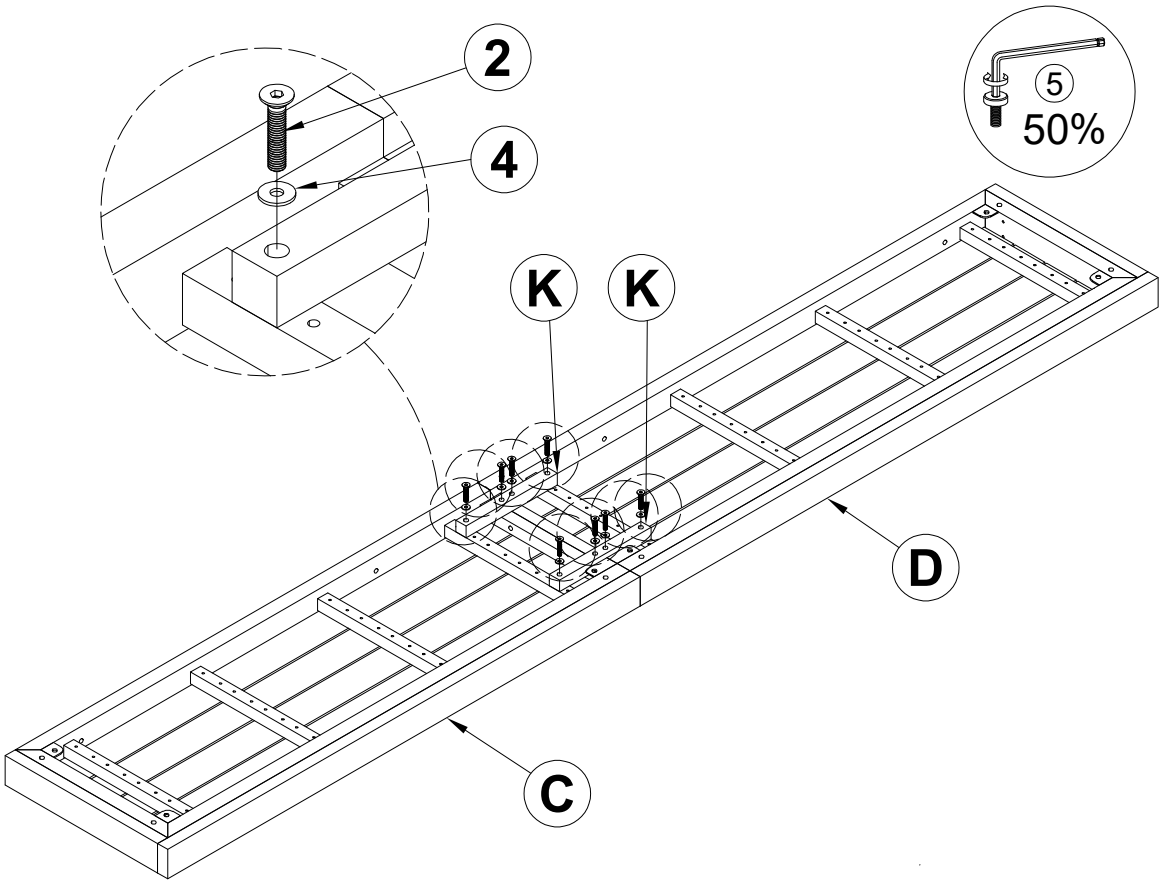

Connect Connection Bar (K), tighten Bolt (2) & flat washer (4) with Allen Wrench (5).

STEP 3

A	x1
B	x1
2	x3
4	x3

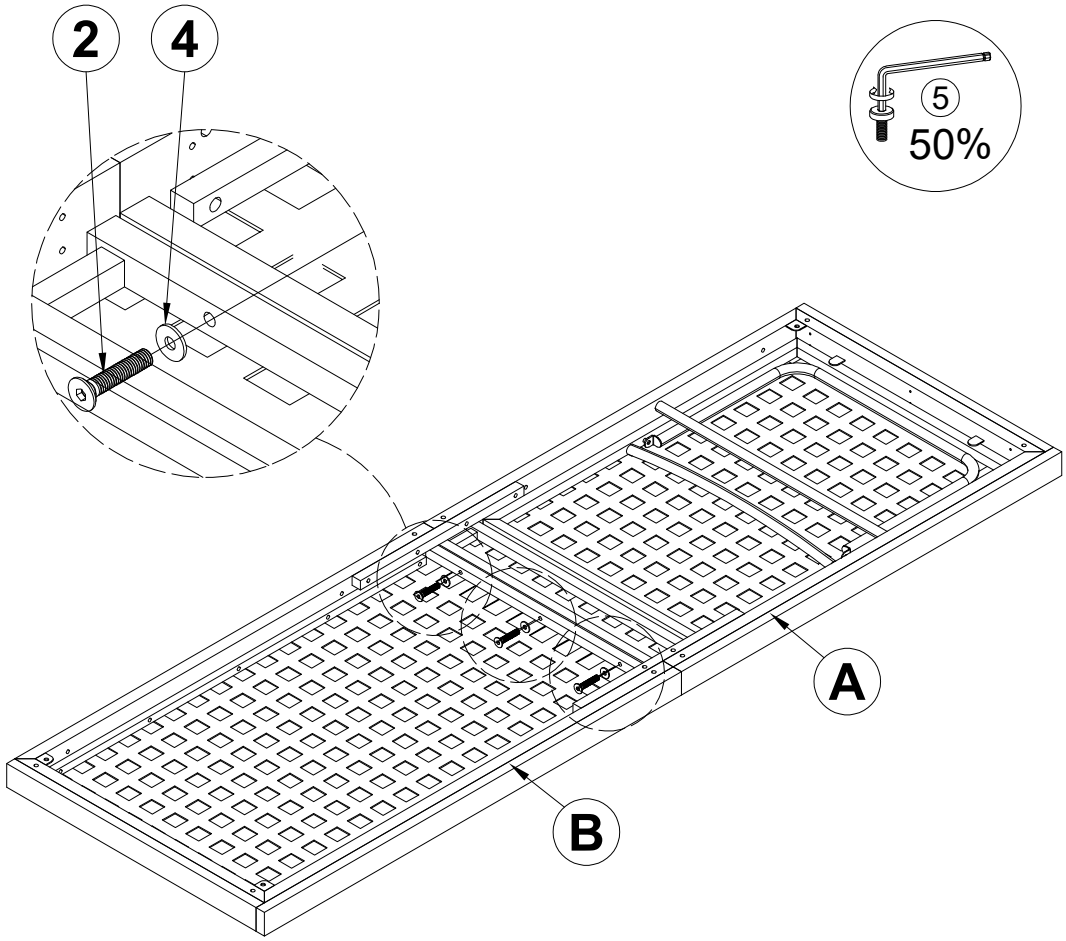

Connect Seat Bench (A) & (B), tighten Bolt (2) & flat washer (4) with Allen Wrench (5).

STEP 4

J	x1
2	x4
4	x4

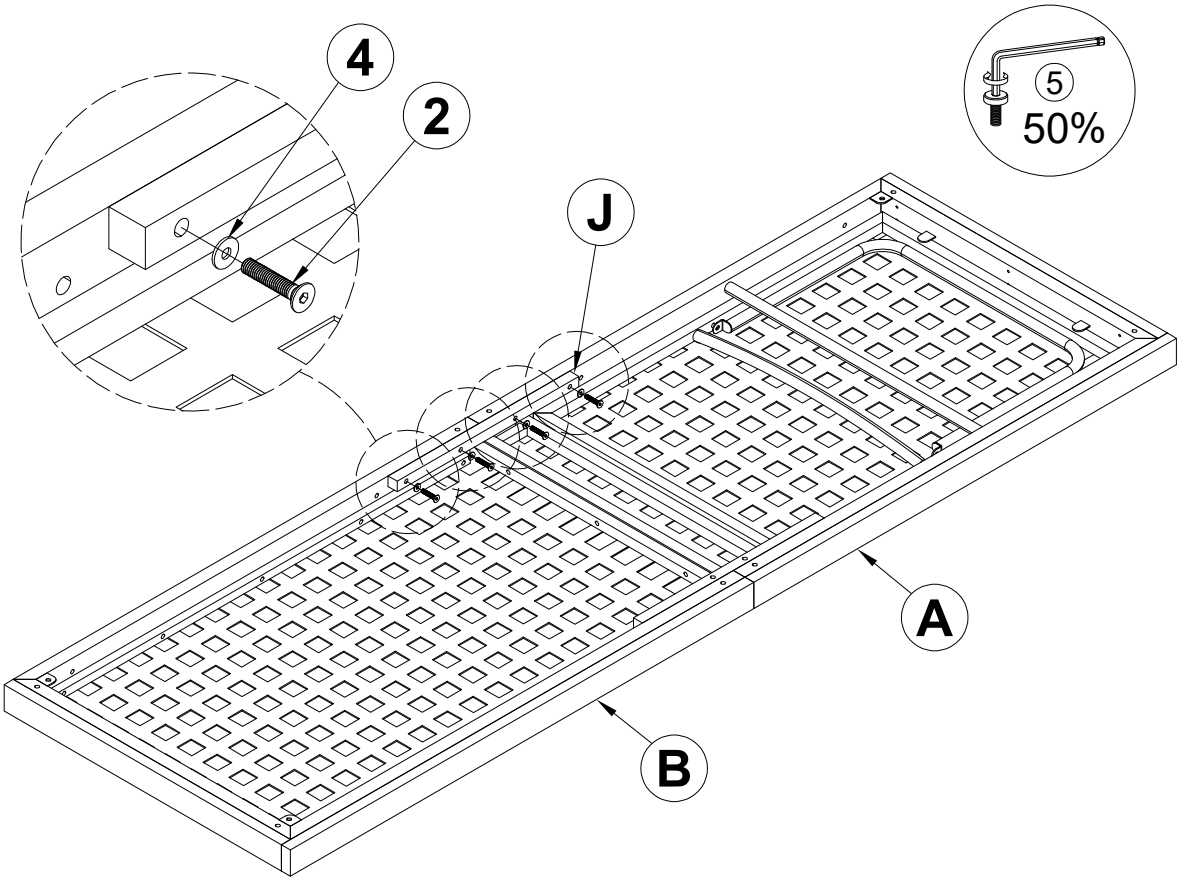

Connect Connection Bar (J), tighten Bolt (2) & flat washer (4) with Allen Wrench (5).

STEP 5

I	x1
2	x4
4	x4

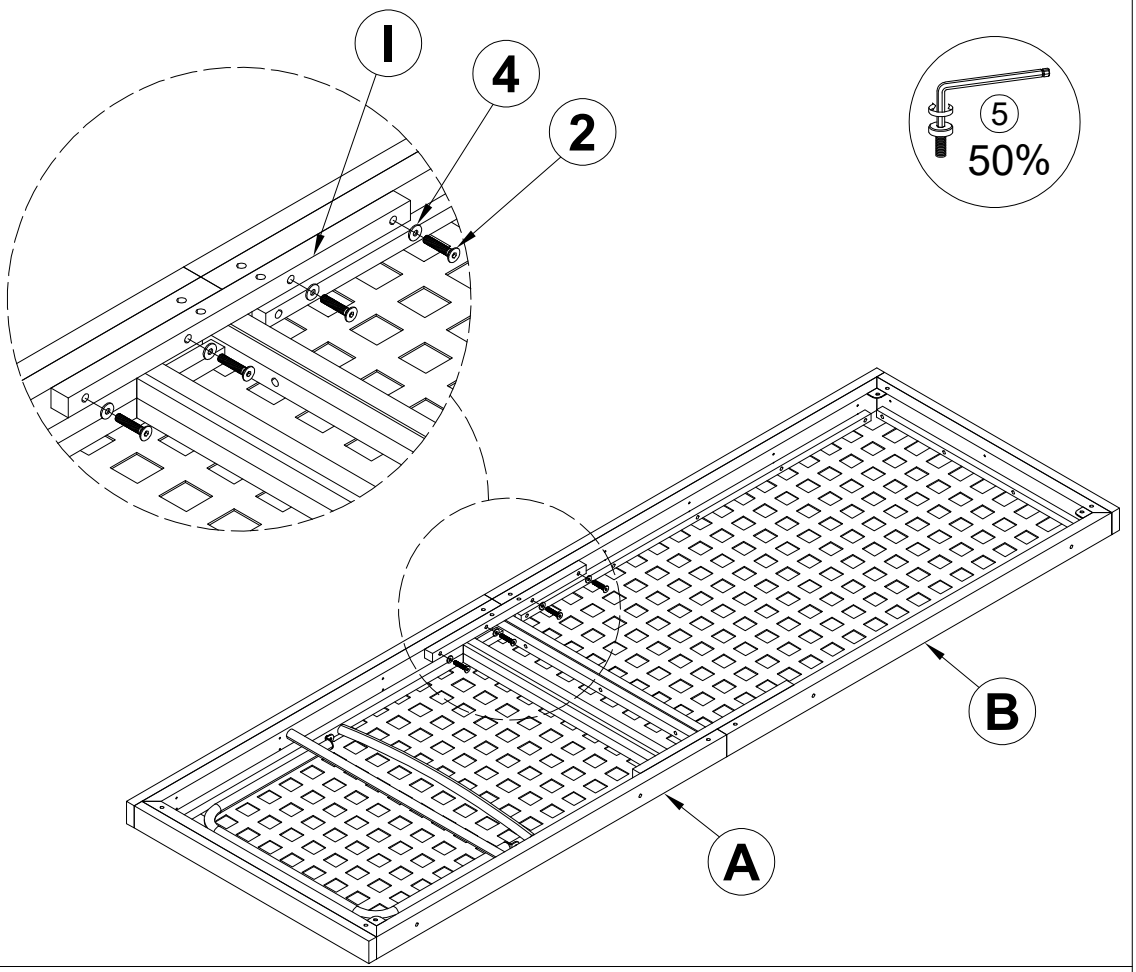

Connect Connection Bar (I), tighten Bolt (2) & flat washer (4) with Allen Wrench (5).

STEP 6

3	x4
4	x4

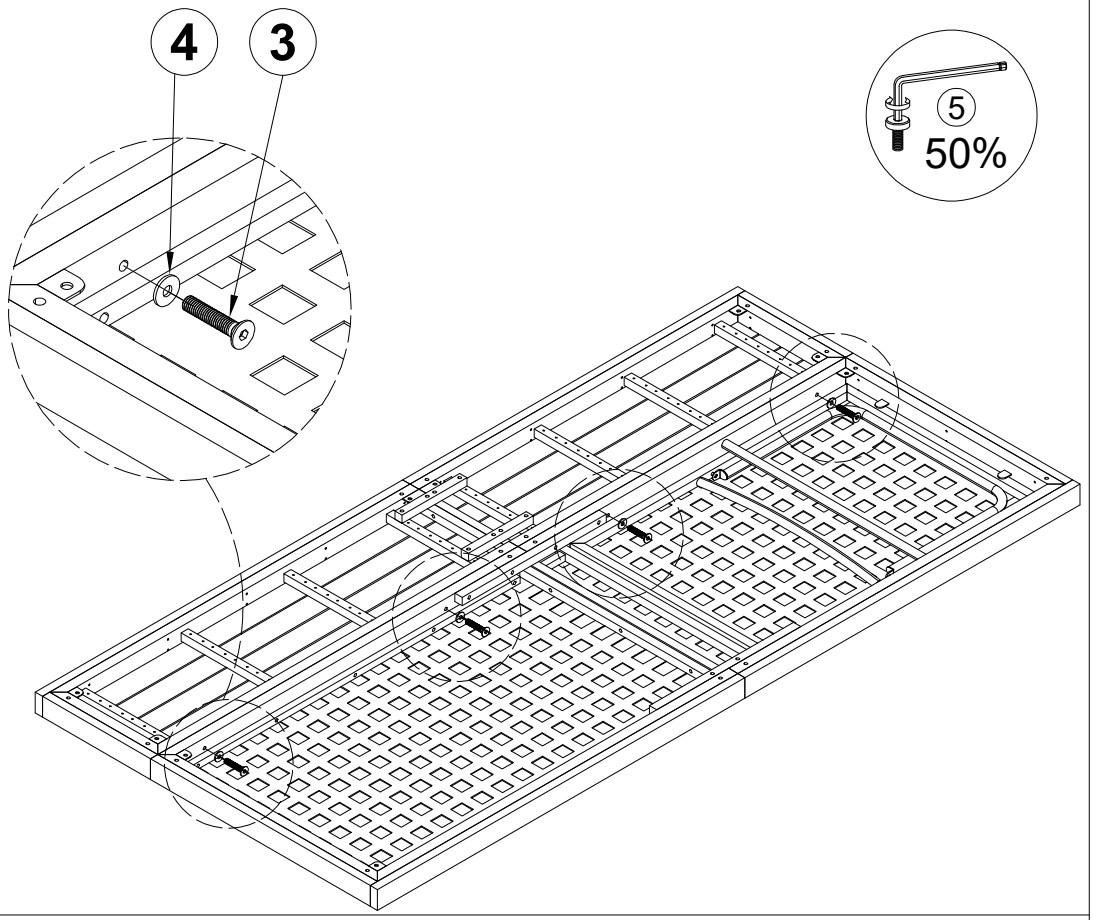

Connect The part from Step 2 & The part from Step 5, tighten Bolt (3) & flat washer (4) with Allen Wrench (5).

STEP 7

E x2

1 x8

4 x8

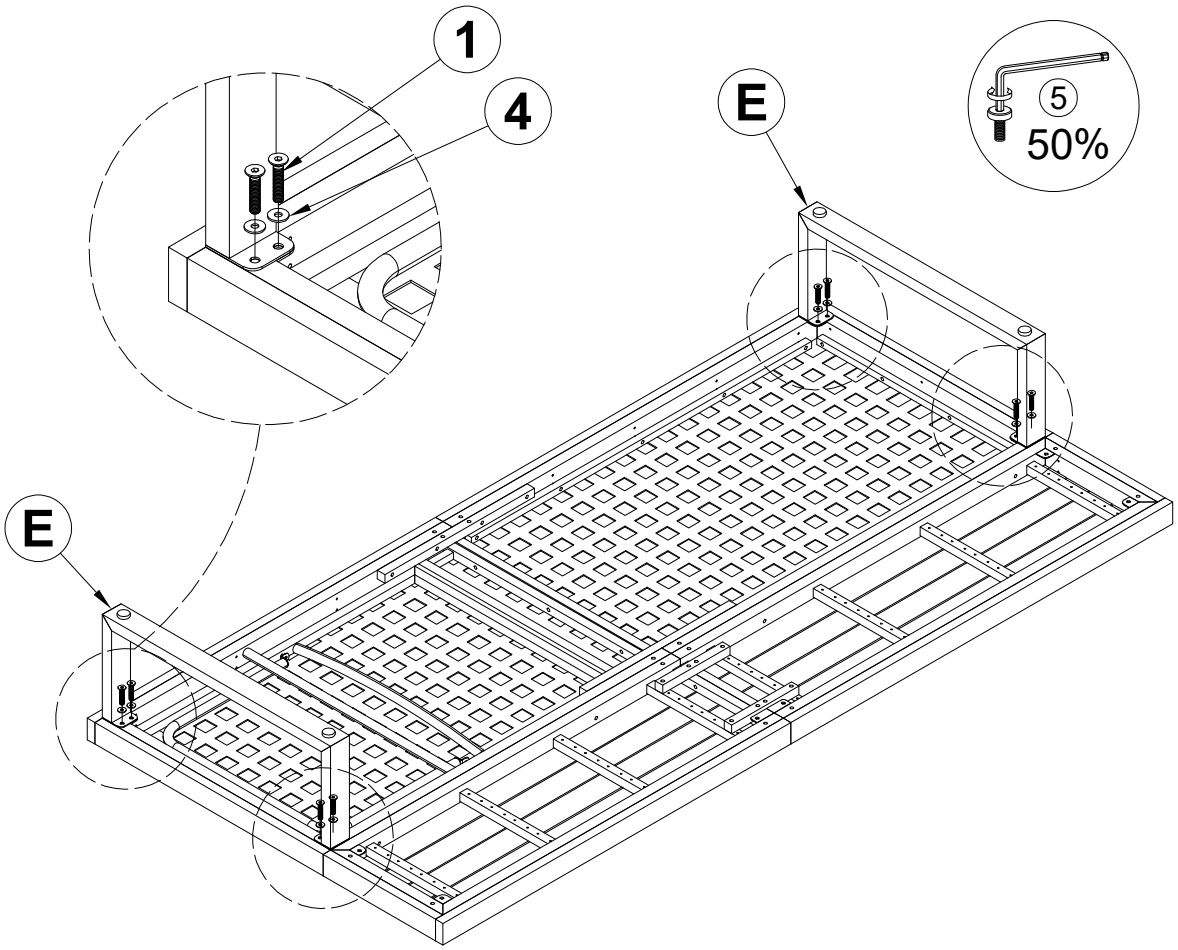

Connect The part from Step 6 & Large Leg (E), tighten Bolt (1) & flat washer (4) with Allen Wrench (5).

STEP 8

F x2

1 x8

4 x8

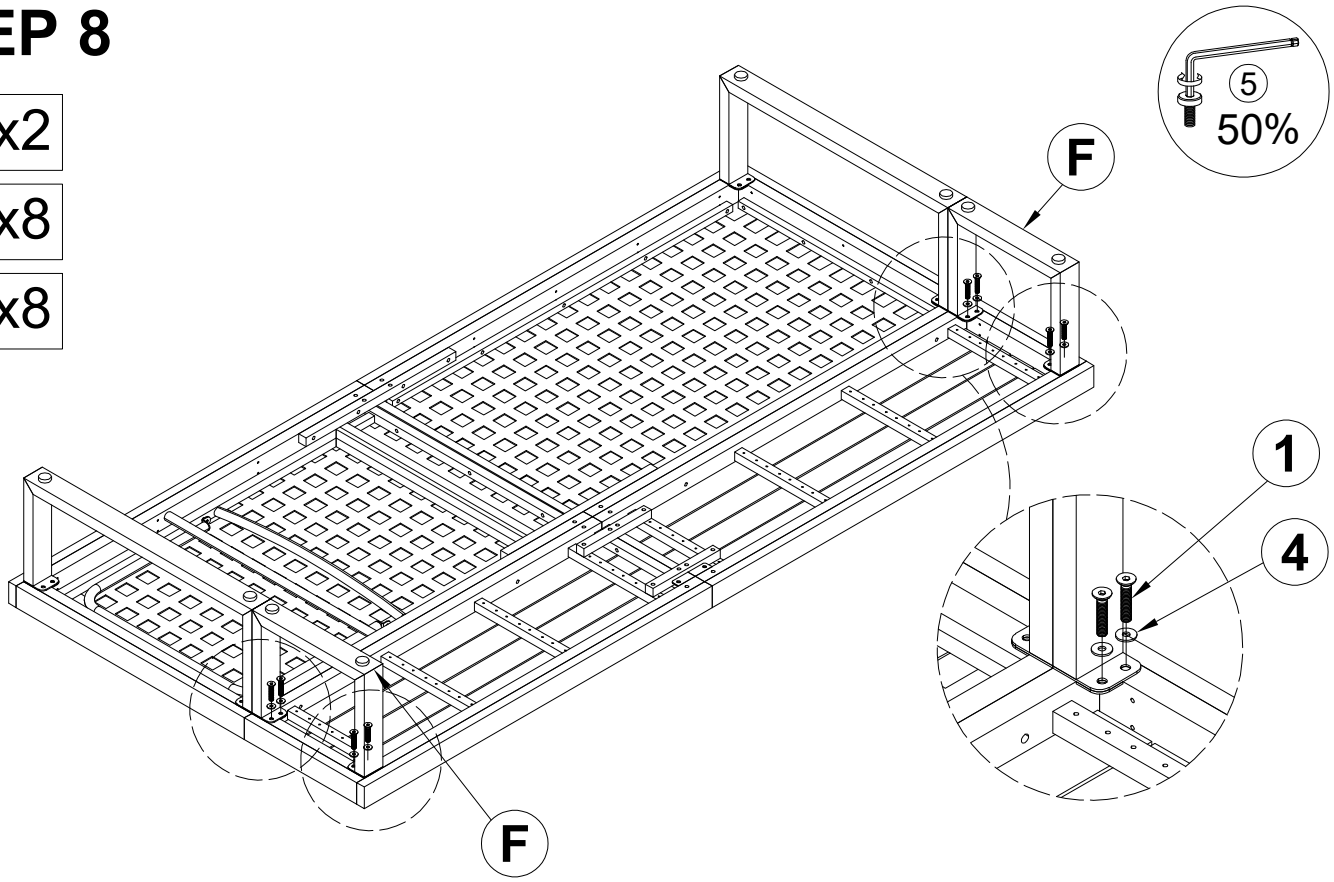

Connect Small Leg (F), tighten Bolt (1) & flat washer (4) with Allen Wrench (5).

STEP 9

G x2

1 x8

4 x8

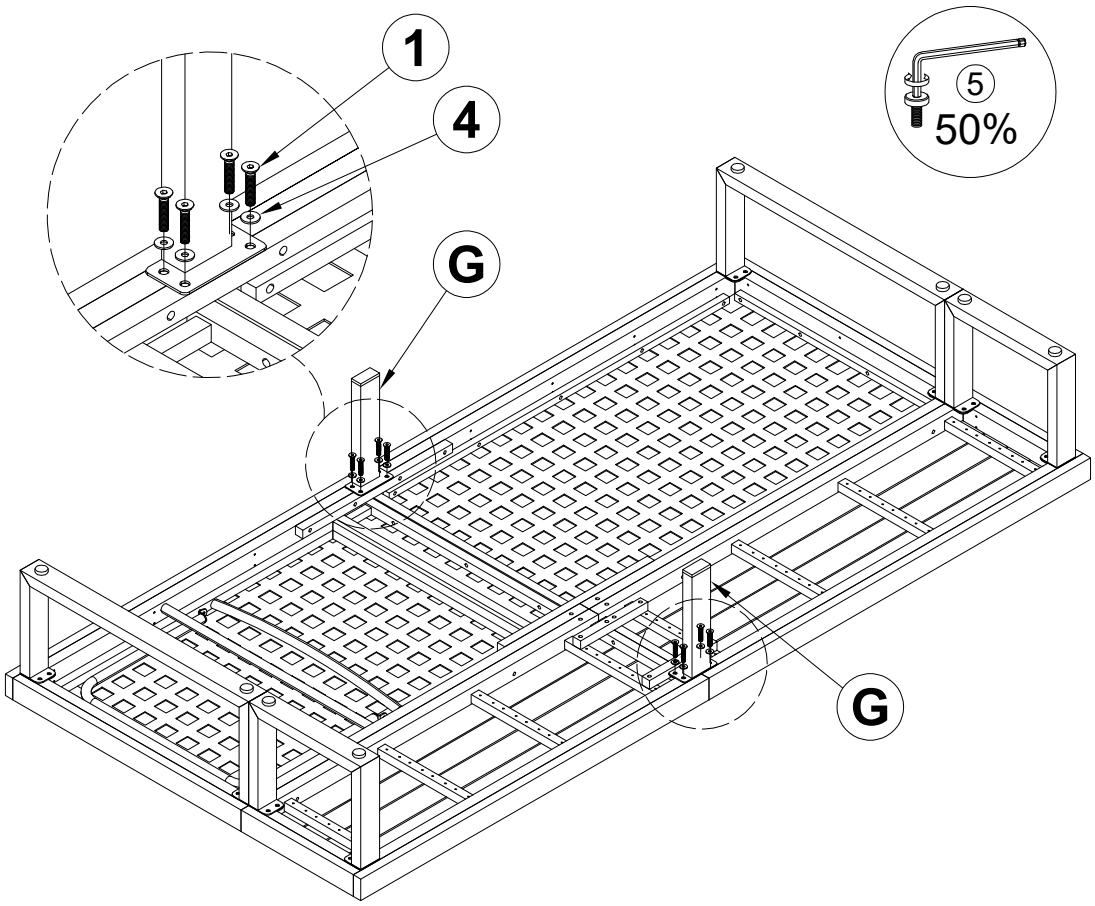

Connect Support Leg (G), tighten Bolt (1) & flat washer (4) with Allen Wrench (5).

STEP 10

H x1

1 x4

4 x4

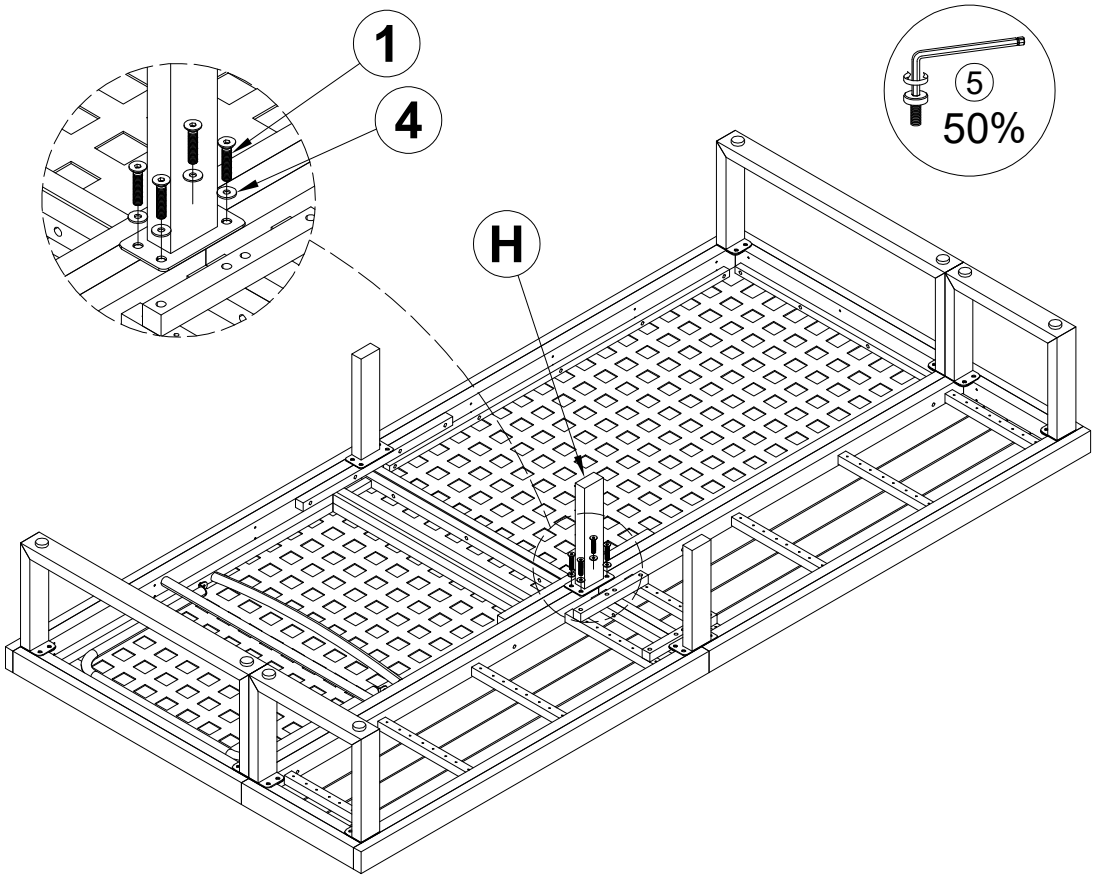

Connect Middle Support Leg (H), tighten Bolt (1) & flat washer (4) with Allen Wrench (5).

STEP 11

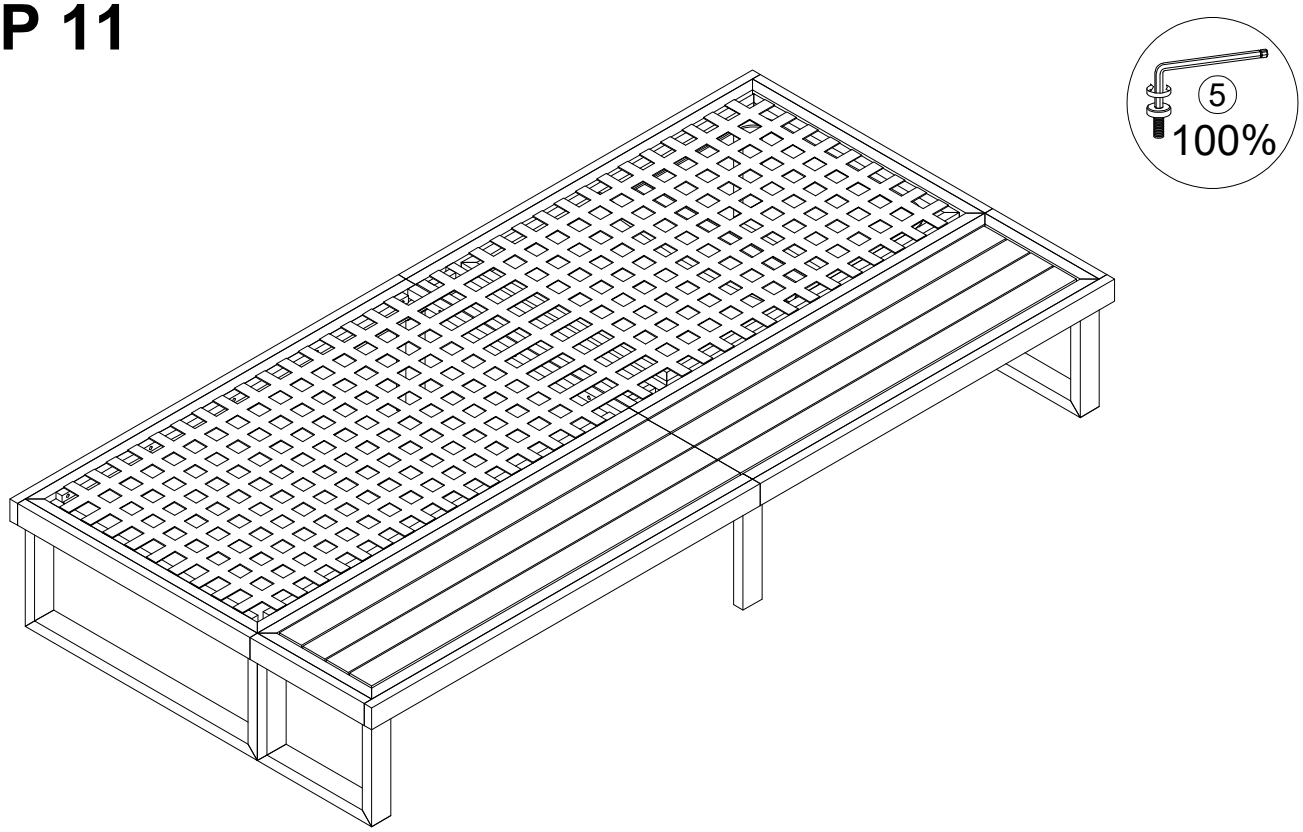

Put the Bench upright, firmly tighten Bolts with Allen Wrench (5), to finish Bench.

STEP 12

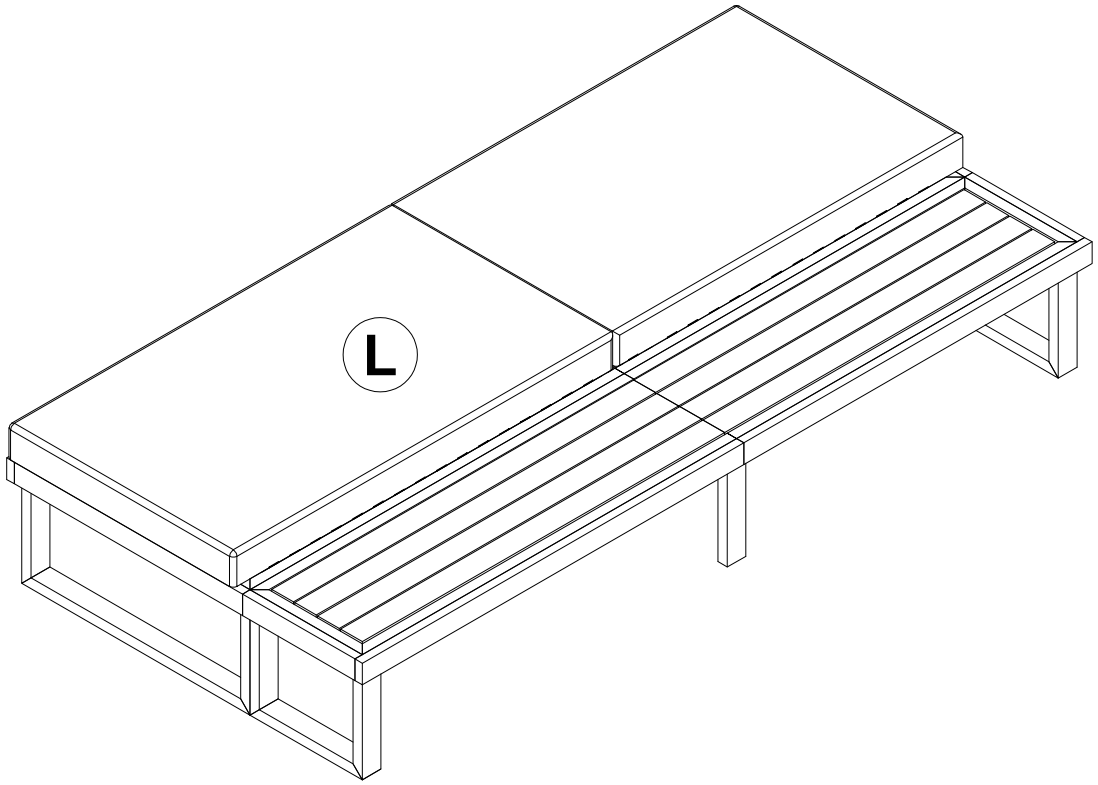

Open all the vacuum bags, adjust the cushions. Set up the Cushions (L) to finish Bench.

STEP 13

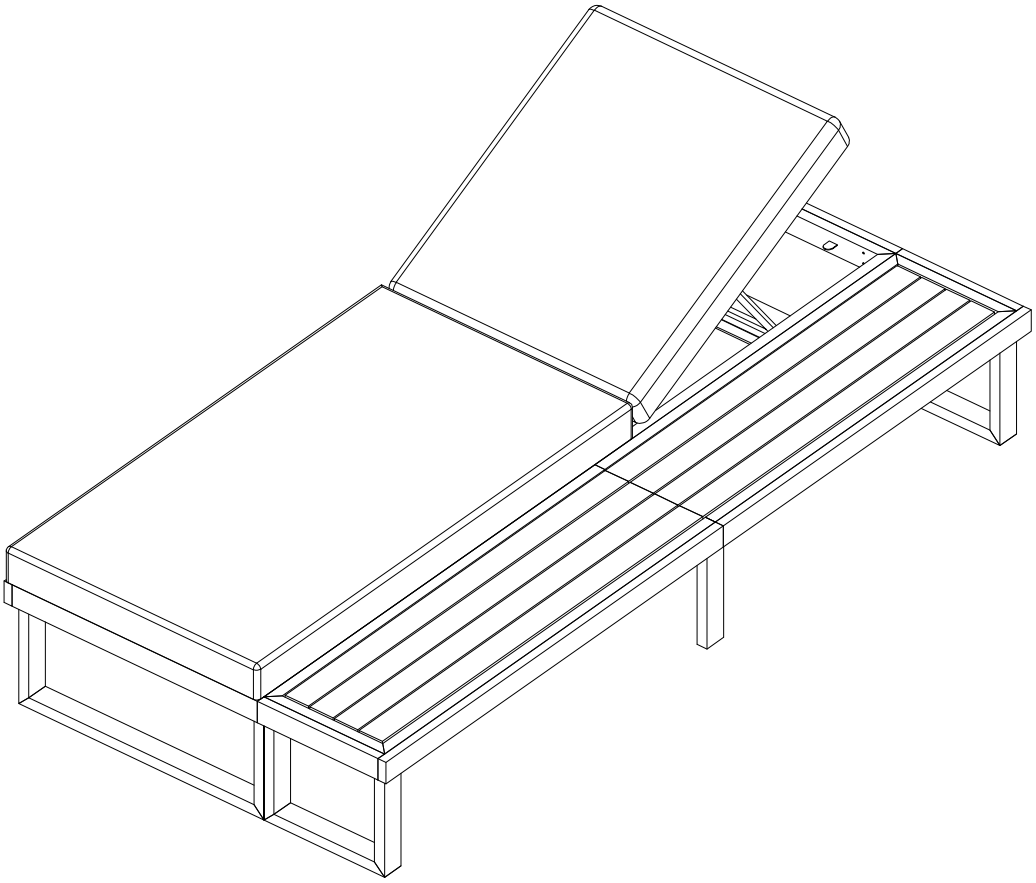

Finish.