ASSEMBLY INSTRUCTION

Thank you for purchasing the quality product. Be sure to check all packing material carefully for small parts which may have come loose inside the carton during shipment. Separate, Identify and count all parts and metal hardware. Compare with all parts listed to be sure all parts are present. If any part(s) are missing or damaged, please contact your local furniture dealer. For efficient and speedy service, please indicate the model number and code letter of part(s) needed.

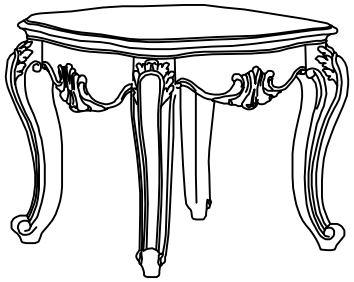

Do not fully tighten screws until fully assembled

HARDWARE LIST			
A		ϕ5/16"*23mm	8 PCS
B		ϕ5/16"	8 PCS
C	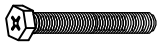	∅5/16"*2-1/2"	8 PCS
D		12 mm Open Wrench	1 PC

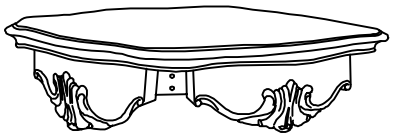

TABLE TOP 1 PC



LEG 4 PCS

How to assemble & Steps

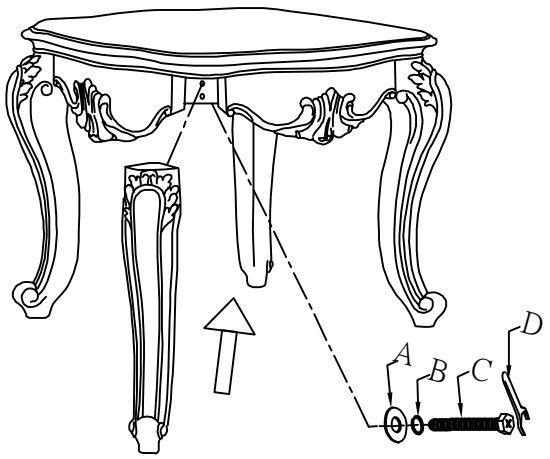

Attention

***Some number parts listed on the instruction sheet may not be in parts bag as they may be assembled. Carefully check parts and packing materials prior to ordering replacements. ***

CLEANING INSTRUCTIONS

Clean the surface with a furniture polish and a soft cloth