CORONA SMALL EXTENDING DINING TABLE COR70

- Please check that all parts and fittings are correct before assembling the item.
- Replacement parts can be supplied for any damages to the item.
- Please keep all packaging until the item is assembled as we will require information from this if replacement parts are required.
- If you have any questions regarding the assembly of your item please call 01709 836856 or email admin@mercersfurniture.co.uk

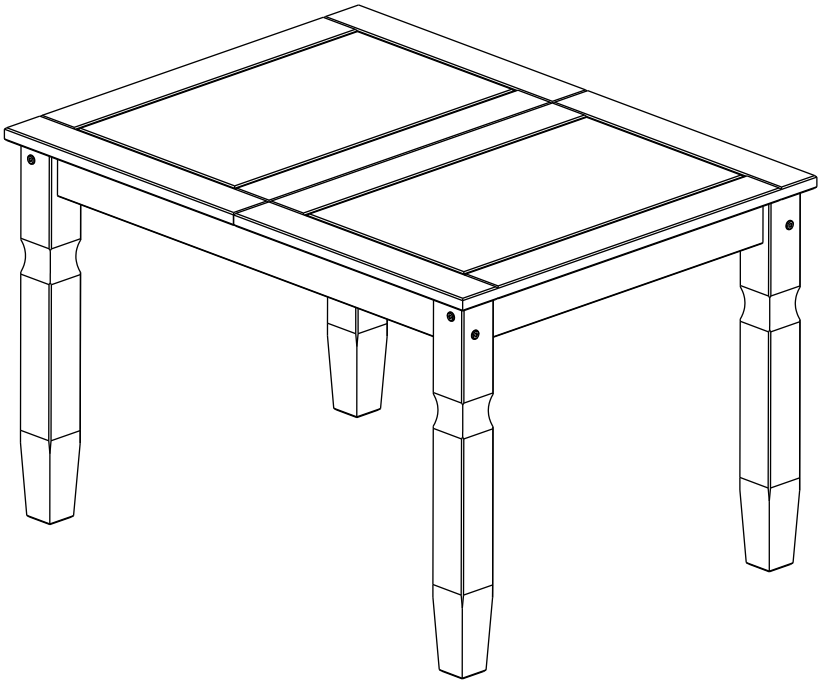

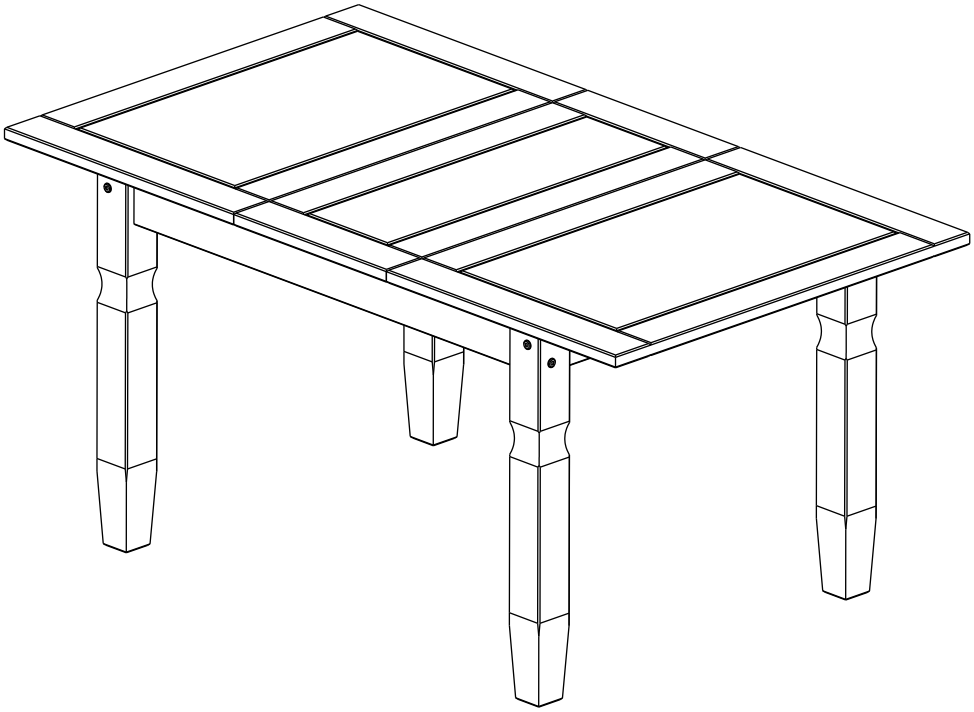

A	Ø7 x 80mm	08
B	Ø7 x 60mm	08
C	10 x 50	06
D	8,0 x 20	08
E		08

F	X4	04
G	3,5 x 20	16
H	GLUE	02
I		01

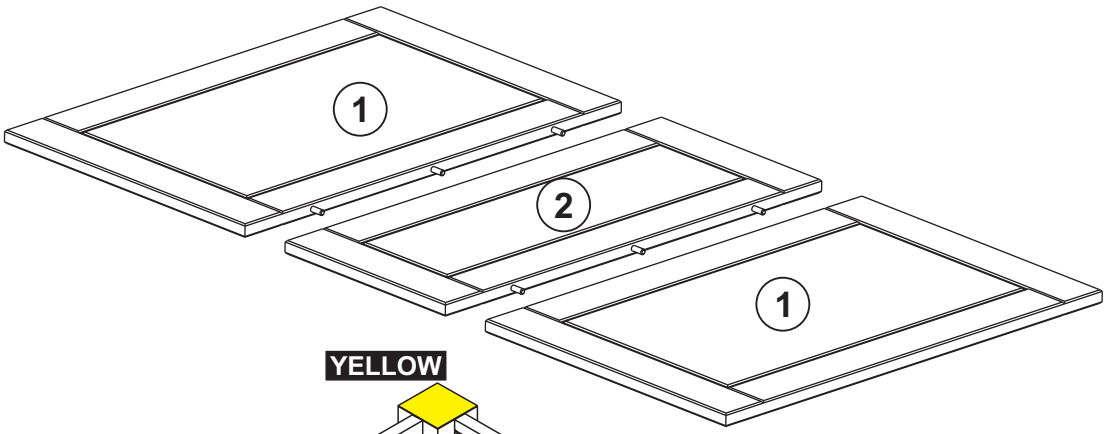

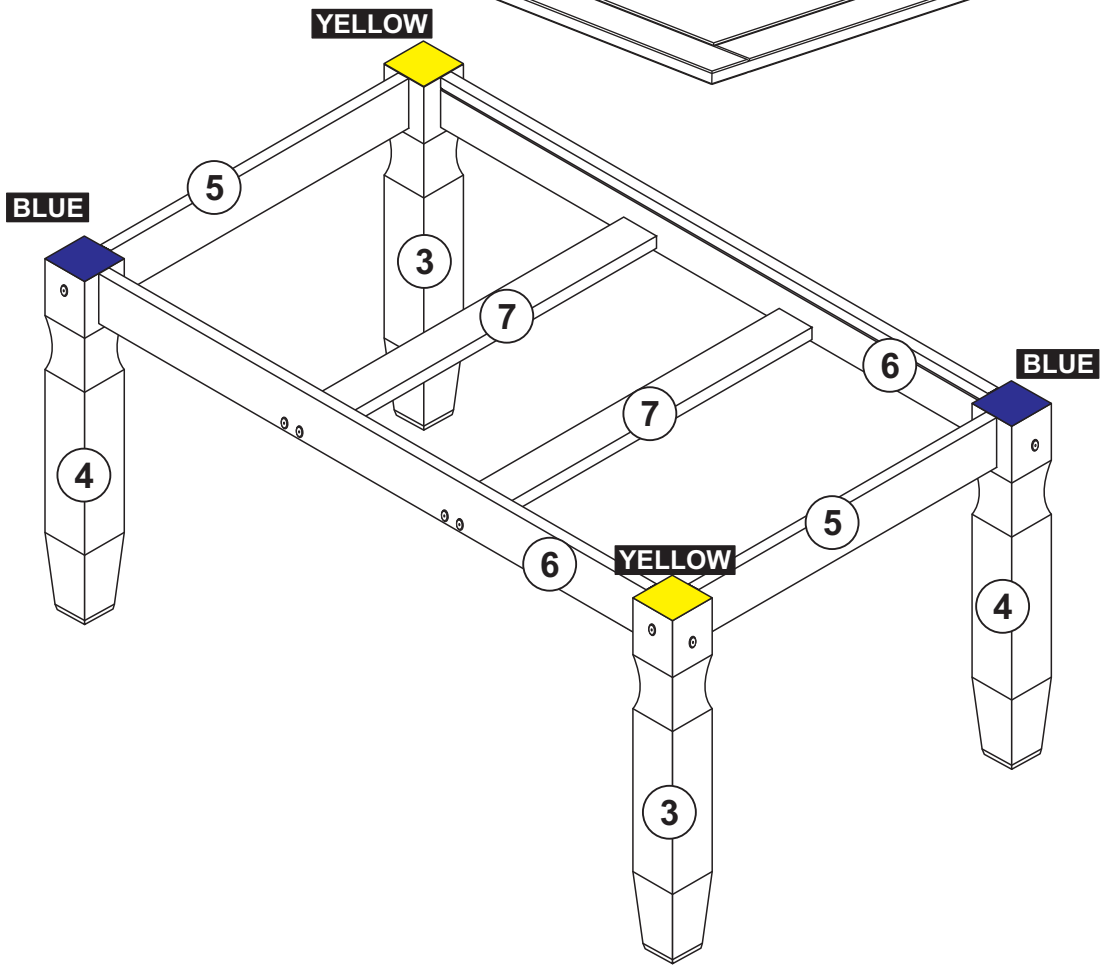

01

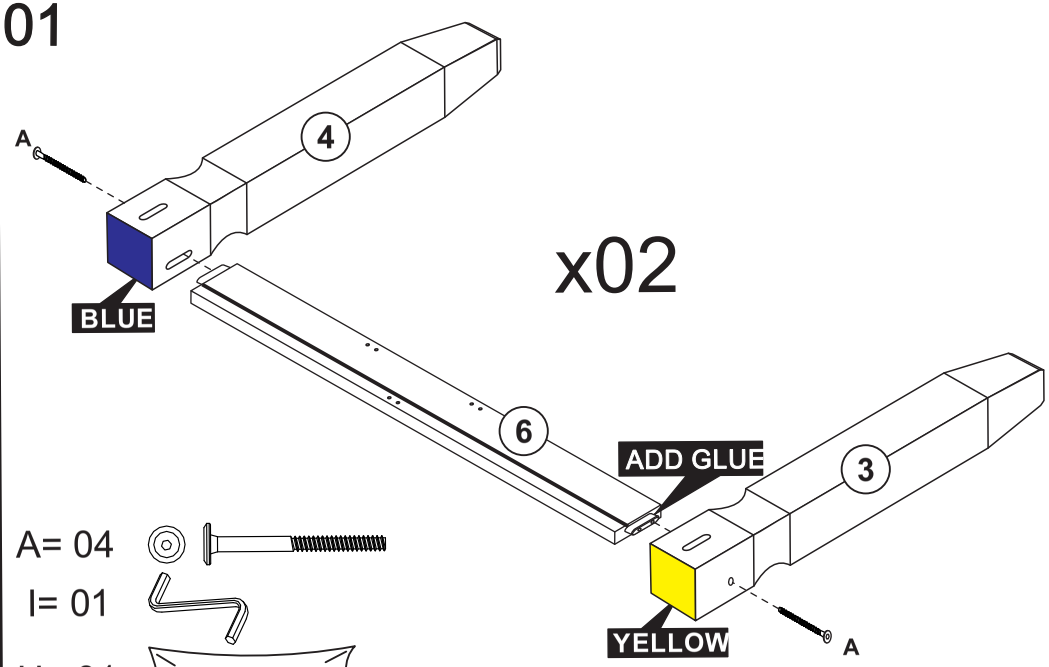

A= 04

I= 01

H= 01 GLUE

02

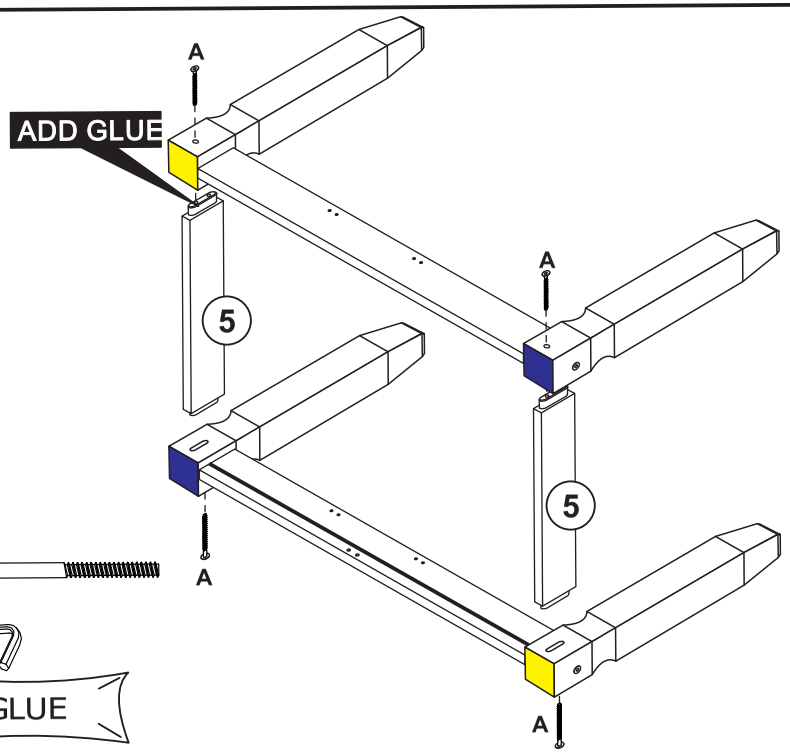

A= 04

I= 01

H= 01 GLUE

03

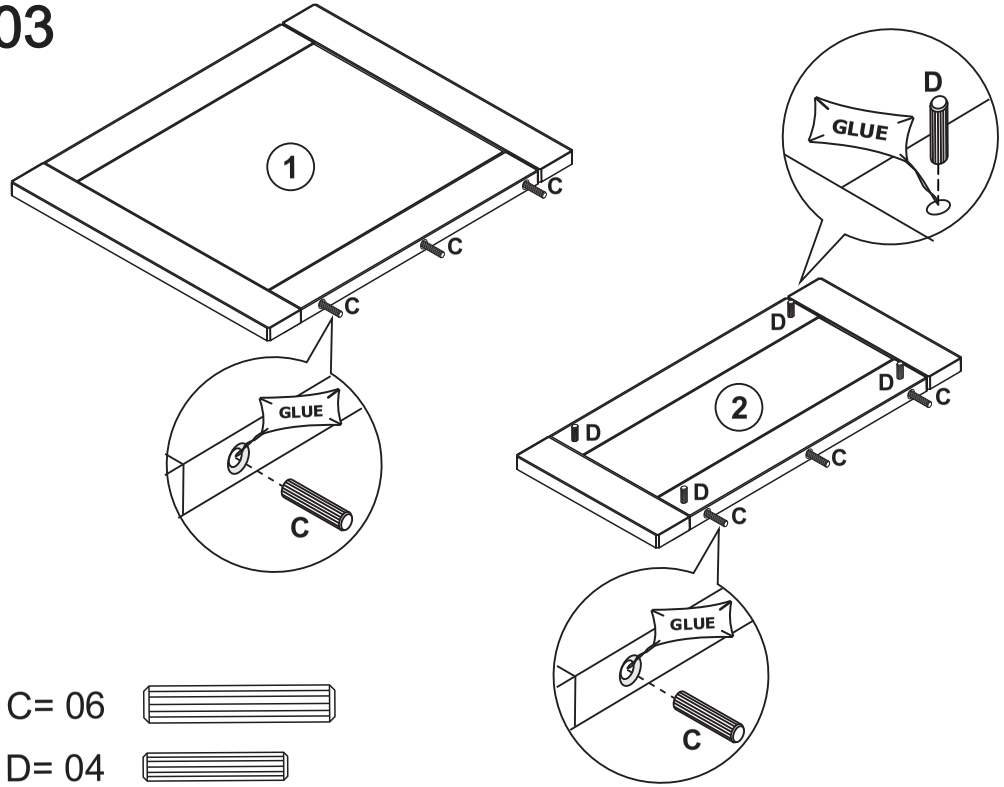

C= 06

D= 04

H= 01 GLUE

04

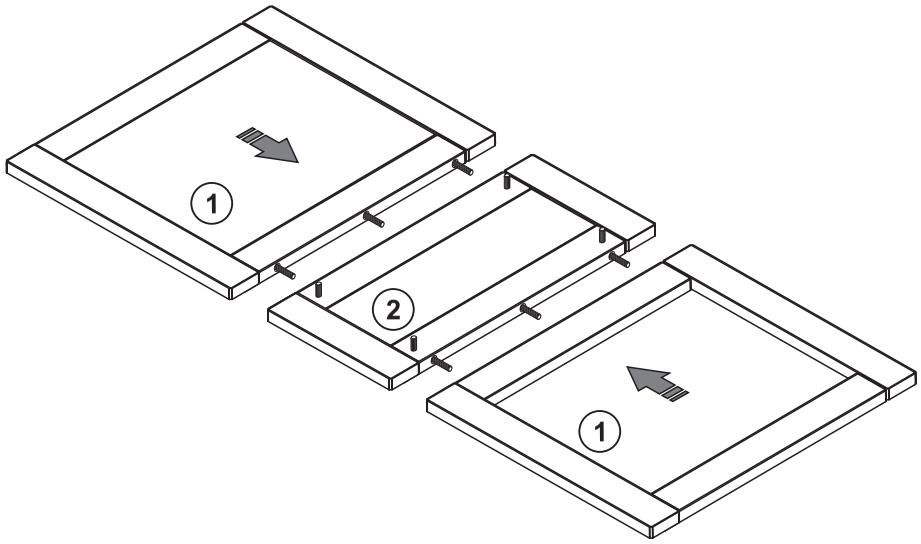

05

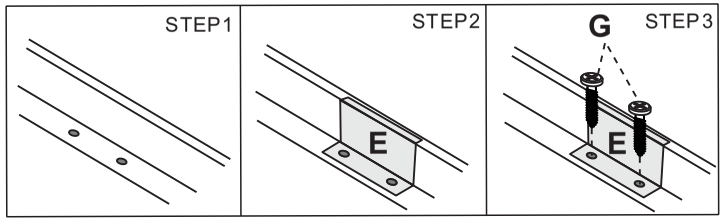

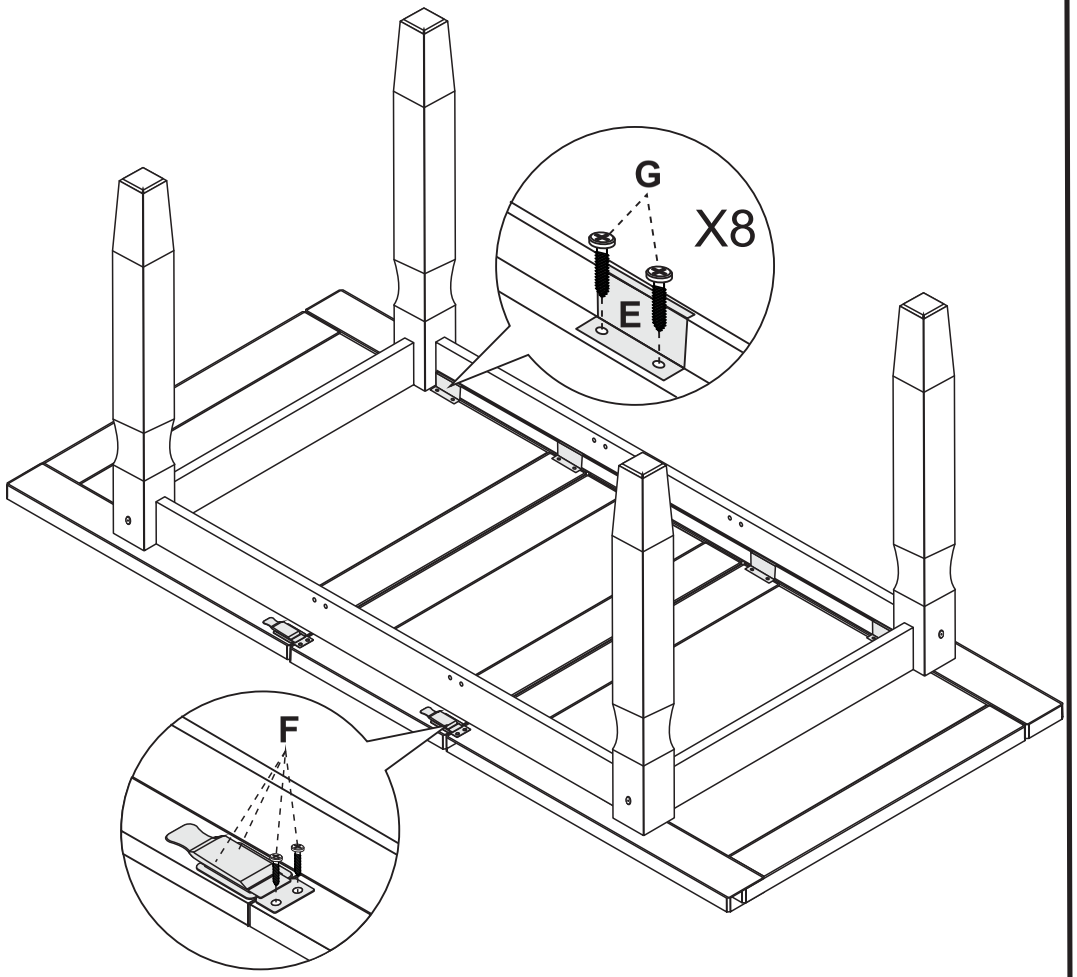

G= 16

E= 08

F= 04 X4

06

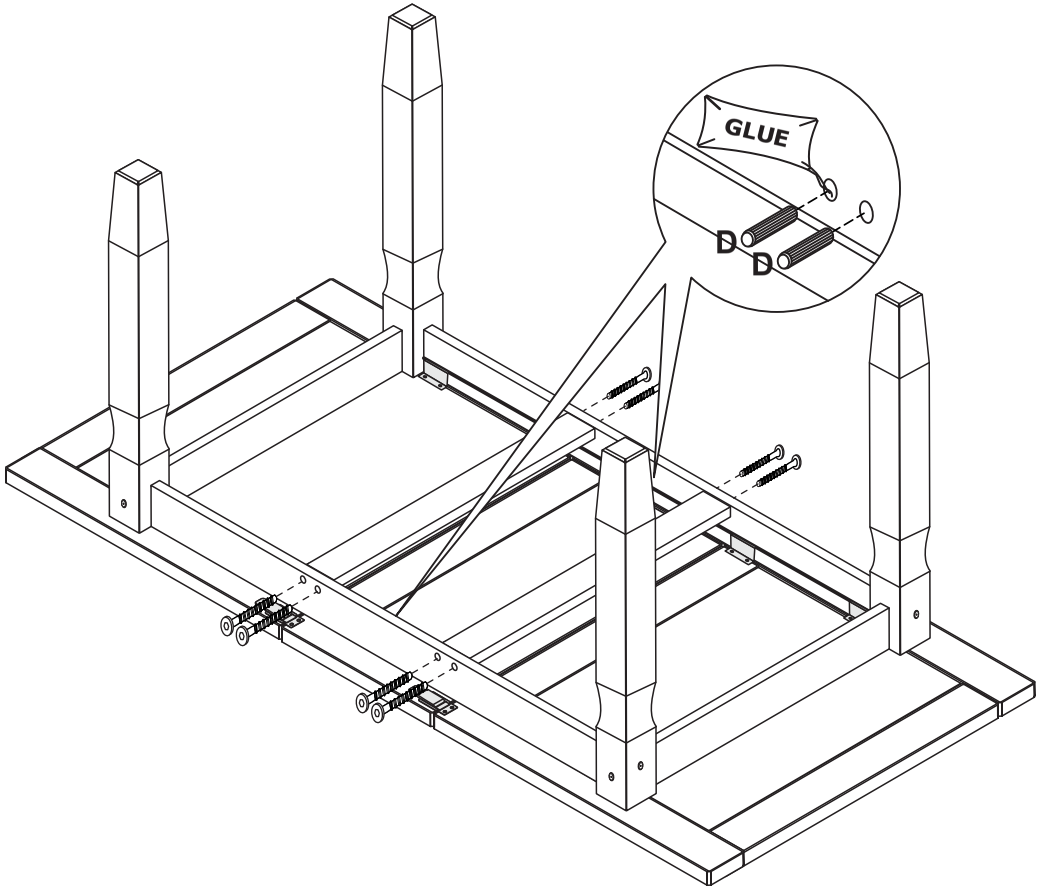

B= 08

I= 01

D= 04

H= 01 GLUE