OPERATIONS MANUAL

Assembly & Installation Instructions

Warning: If any special control devices are used with this fixture, follow the instructions carefully to assure full compliance with N.E.C. requirements. If there are any questions, contact a qualified electric contractor.

Warning: California Residents Proposition 65 This product contains lead, a chemical known to the state of California to cause cancer and birth defects or other reproductive harm. Do not place the product in your mouth. Wash your hands after handling this product.

Caution: It is highly recommended to get an electrician to install this light. Please make sure to turn the electricity off at the main circuit breaker before beginning installation. All glass is fragile. Use care when handling glass component(s) and/or lamp(s)

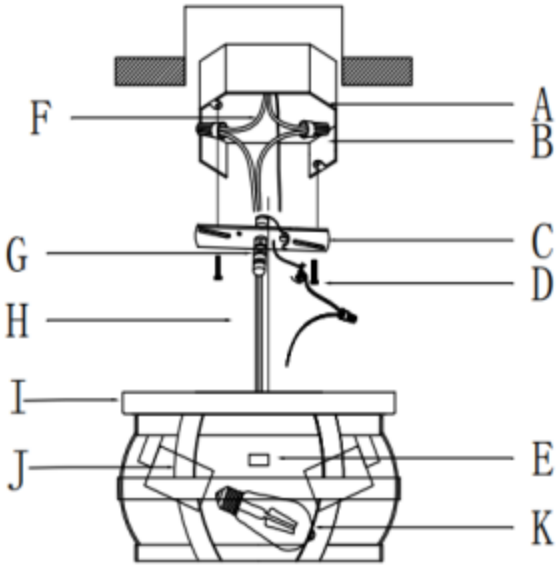

Assembly Steps

1. K → J
2. C. D → A
3. F. H → B
4. E. I → G

WIRE CONNECTION DIAGRAM

Wires meeting safety standards are required to connect the electical circuit

CAUTION: Risk of fire

Please read all instructions carefully. Before you proceed to install,vmake sure that the power supply is turned off and remains off until installation is completed.

PARTS INCLUDED

Code	Part description	QTY
A	Junction box	0
B	Wire nuts	3
C	Mounting bracket	1
D	Mounting screws	2
E	Ball nuts	1
F	Leading wires	0
G	External thread	1
H	Wires	2
I	Canopy	1
J	Sockets	2
K	Light bulb	0