Product Installation Instructions

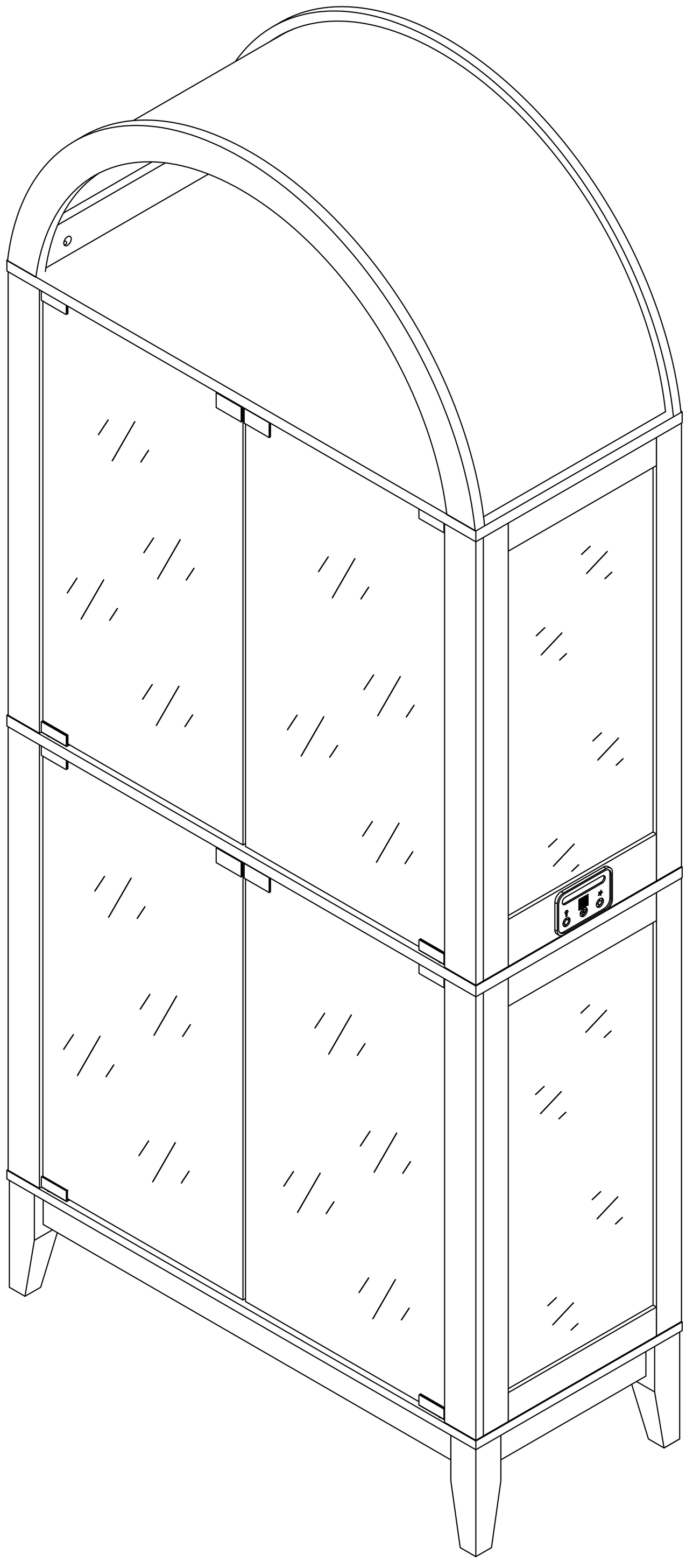

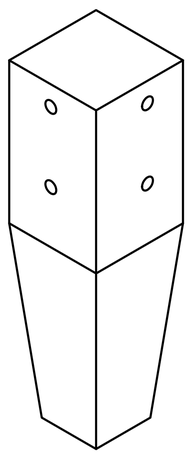

Ax4

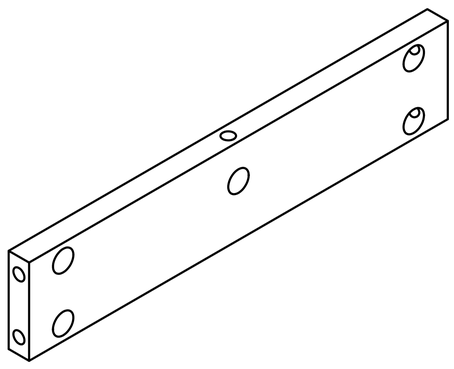

Bx2

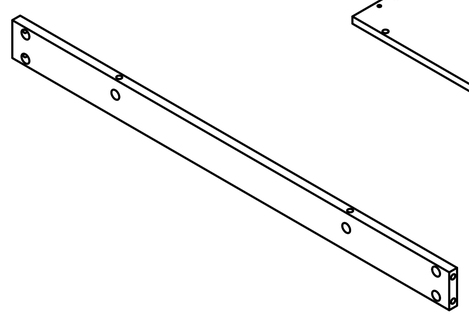

Cx2

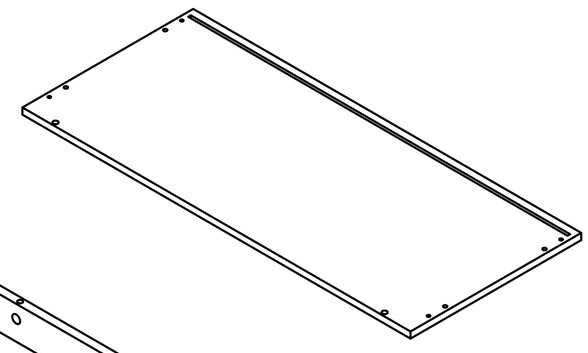

Dx1

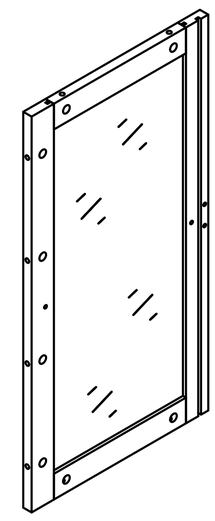

Ex2

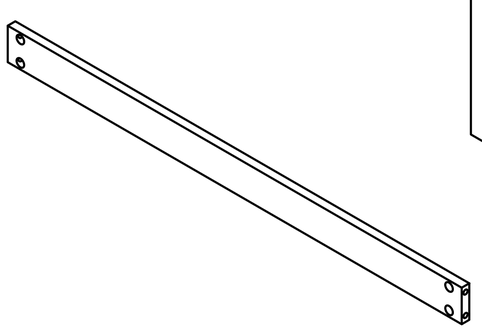

Fx2

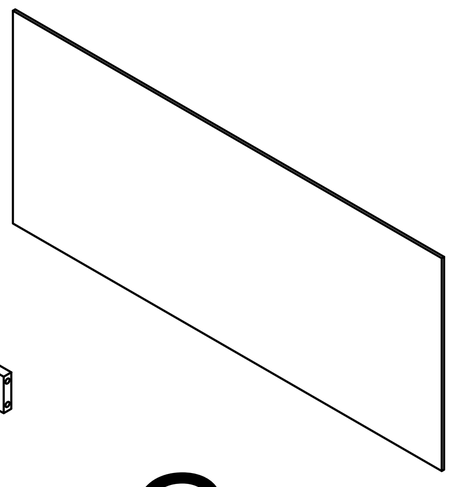

Gx4

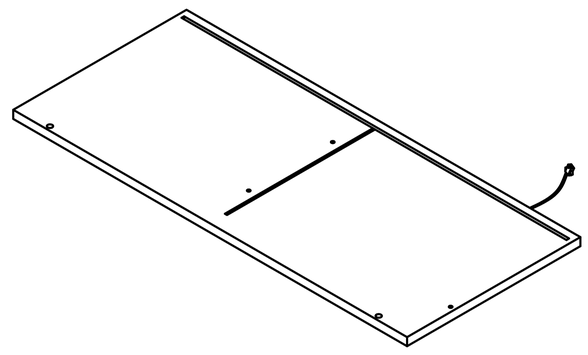

Hx1

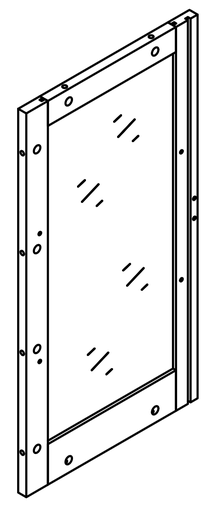

Ix1

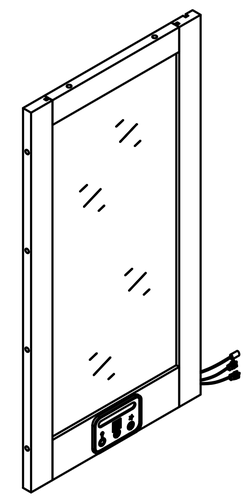

Jx1

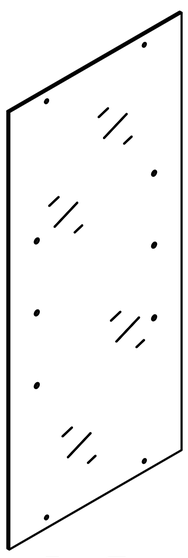

Kx1

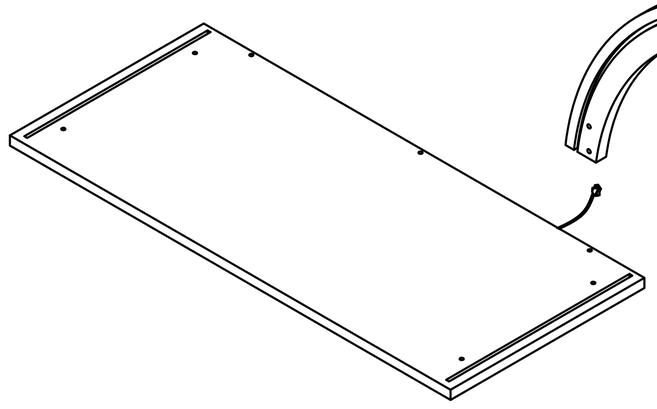

Lx1

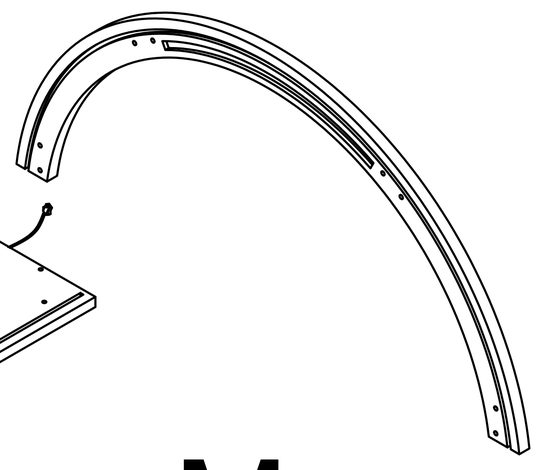

Mx1

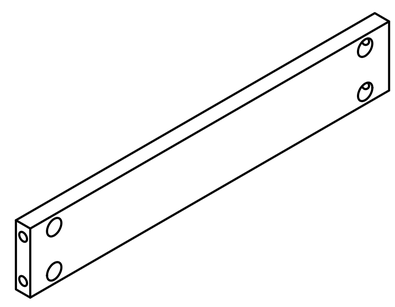

Nx2

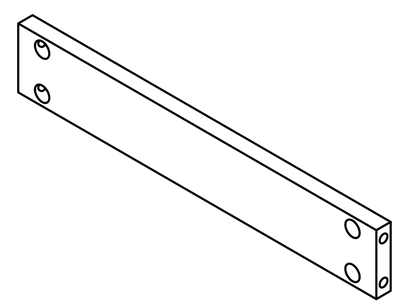

Ox1

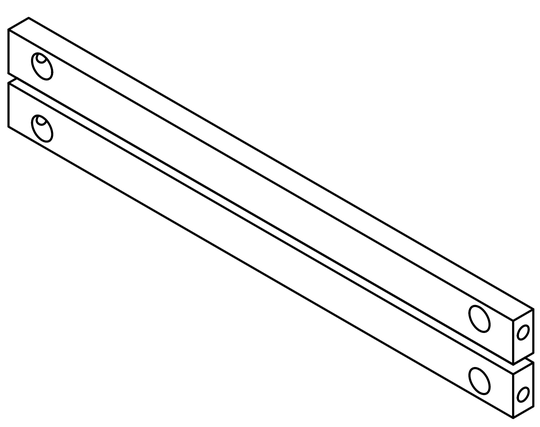

Px1

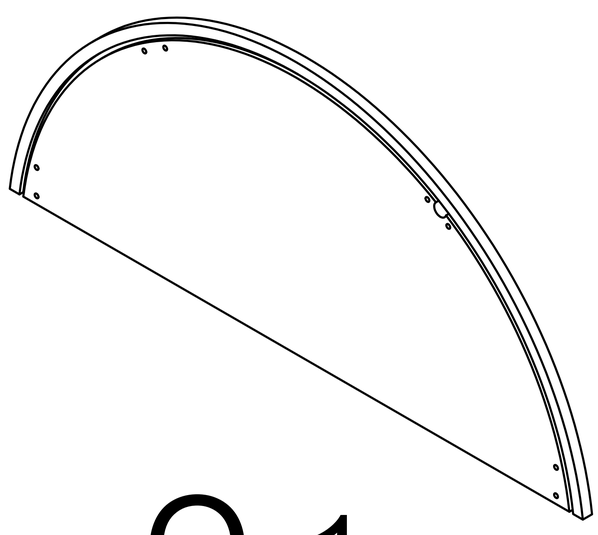

Qx1

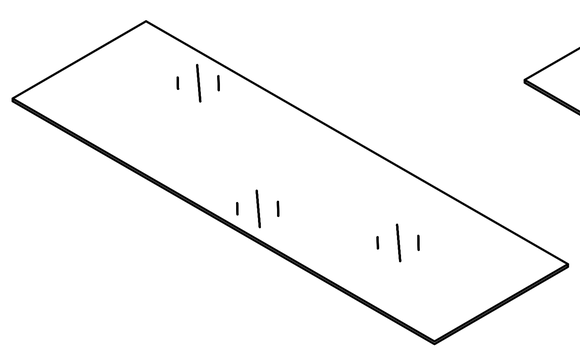

Rx1

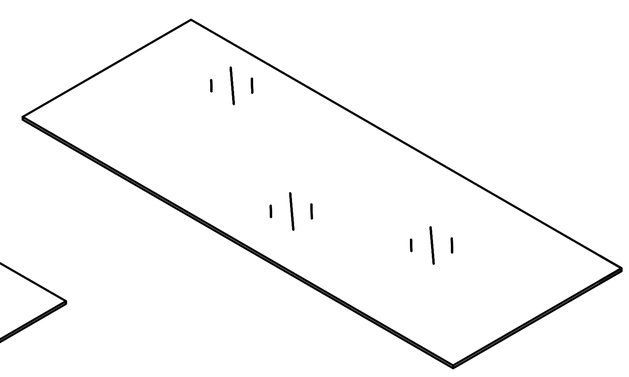

Sx1

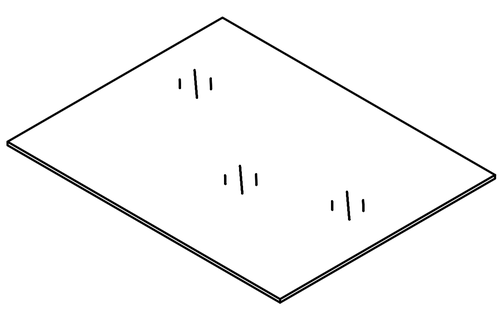

Tx3

Ux4

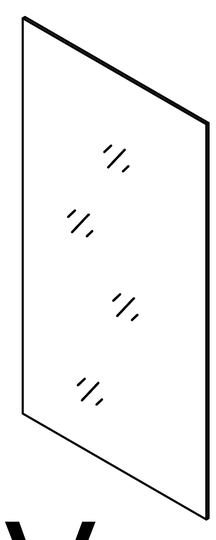

Vx4

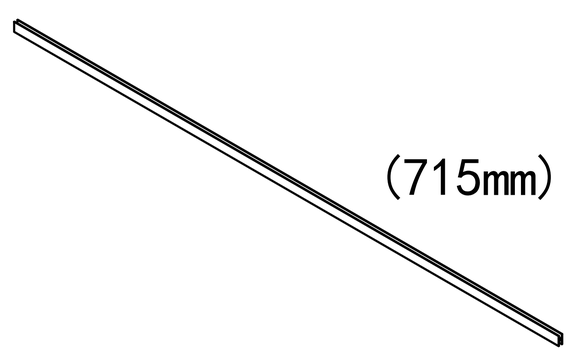

Wx2

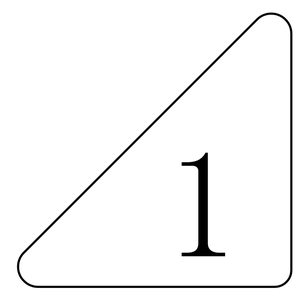

1		Two In One Screw (6x28mm)	85pcs +9pcs
2		Two In One Nut (10x12mm)	85pcs +9pcs
3		Non-slip pads (24x24mm)	4pcs +1pcs
4		Corner Bracket,Screw (4x8mm)	4pcs +1pcs
5		Screw (4x8mm)	4pcs +1pcs
6		Laminate Support Nail & Screw (6x16mm)	6pcs +1pcs / 6pcs +1pcs / 6pcs +1pcs
7		Wire	1pcs
8		Rebound device & Screw (3x16mm)	4pcs +1pcs / 1pcs
		Iron sheet	2pcs
		Hinge	4pcs / 2pcs / 2pcs
9		Rebound device & Screw (3x16mm)	8pcs +2pcs / 2pcs
		Iron sheet	2pcs
		Hinge	4pcs / 2pcs / 2pcs
10		Sticker (371mm) (Ø20mm)	4pcs +1pcs / 1pcs
11		Laminate Support Nail	10pcs +1pcs
12		Fixing clip & screw (3x16mm)	16pcs +2pcs
13		Forked line	1pcs
14		Wire clamp	2pcs +1pcs
15	x1 / x1 / x1 (4x45mm) / x1 (3.5x14mm) / x2	1pcs	1pcs / Double-head screwdriver, use as required
	Anti Fall Hardware		1pcs AC/DC Adapter (12V⎓3.0A) 2

Product structure decomposition

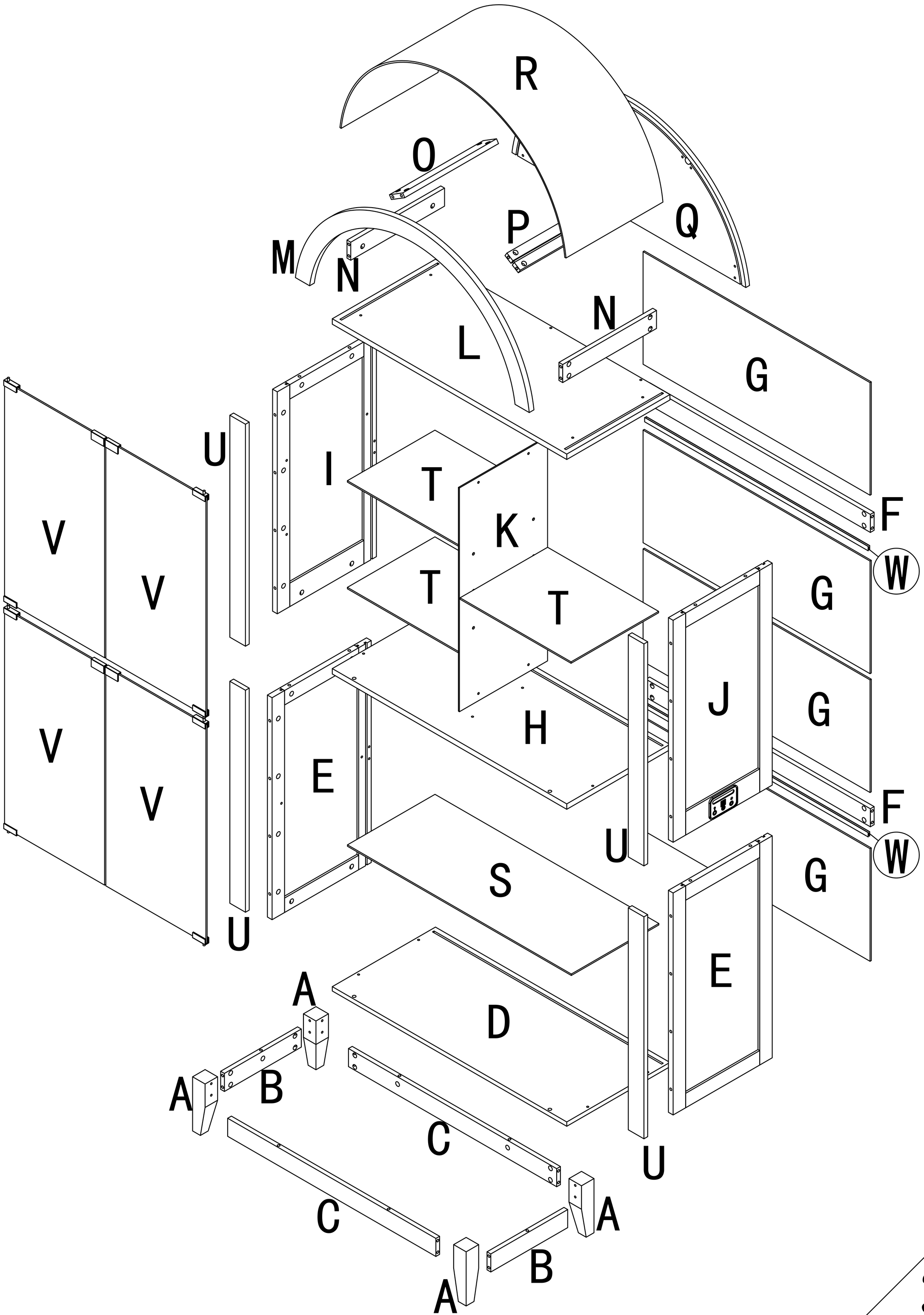

Use parts ① and ②

Step1

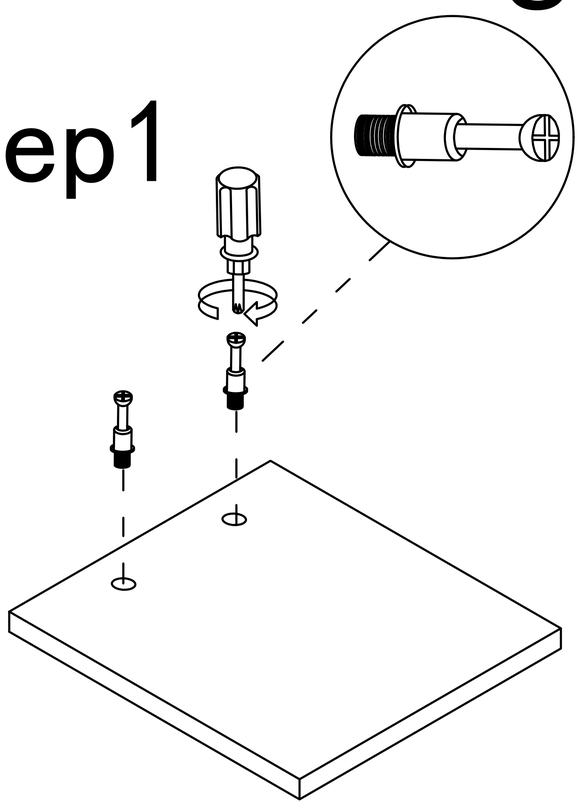

Step2

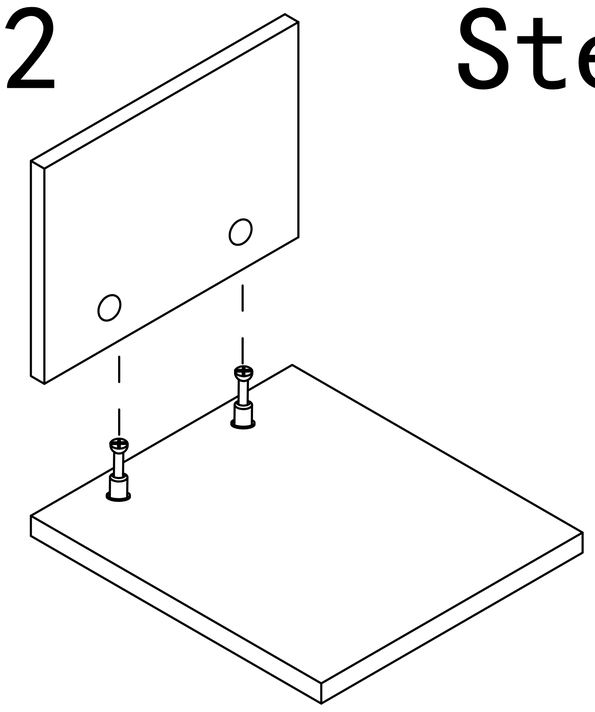

Step3

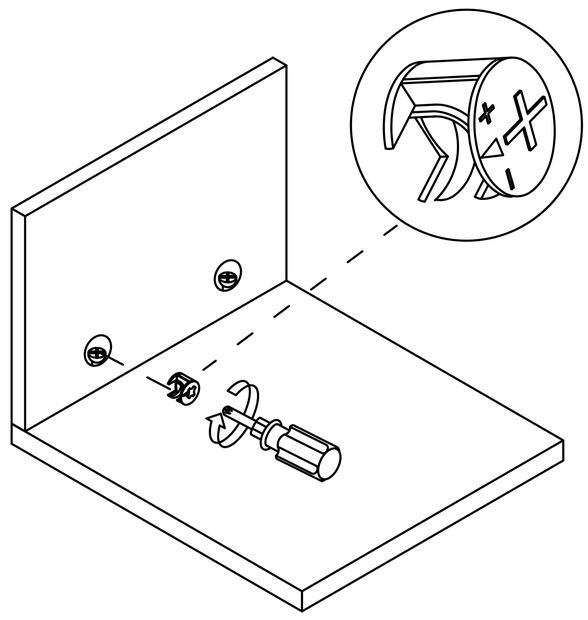

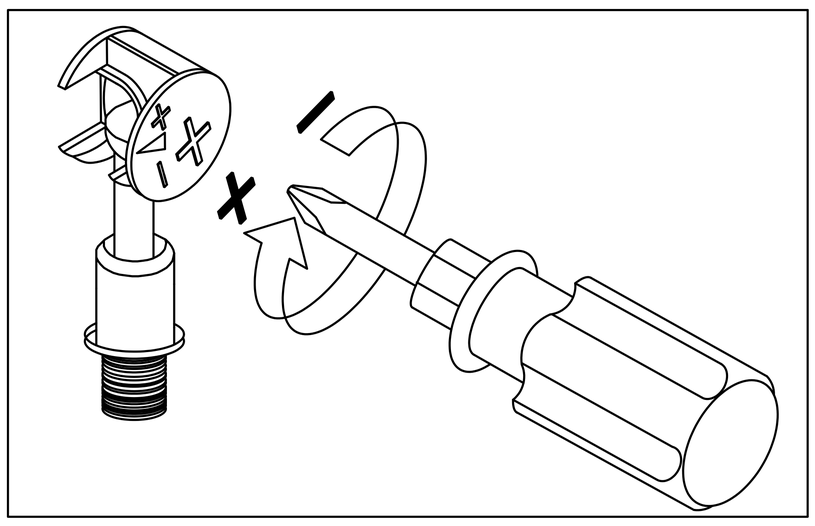

Use a screwdriver to lock in the direction of the "+" sign

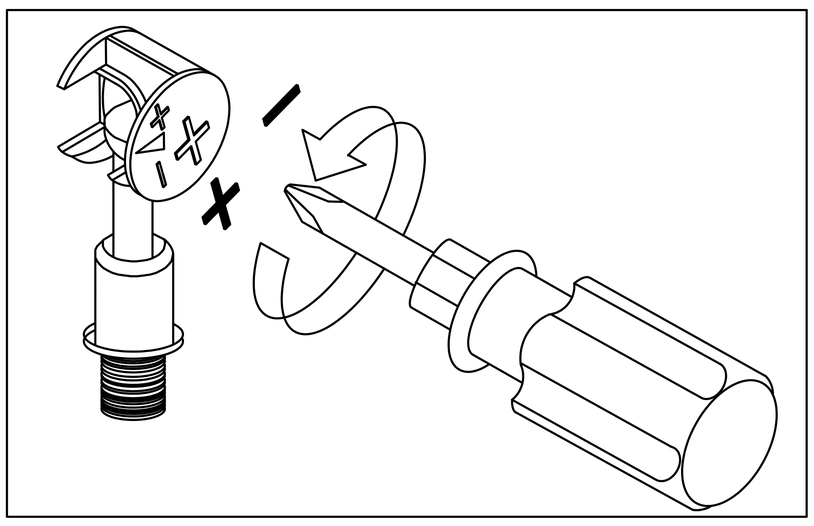

Disassemble along the direction of "-" sign

Step 1

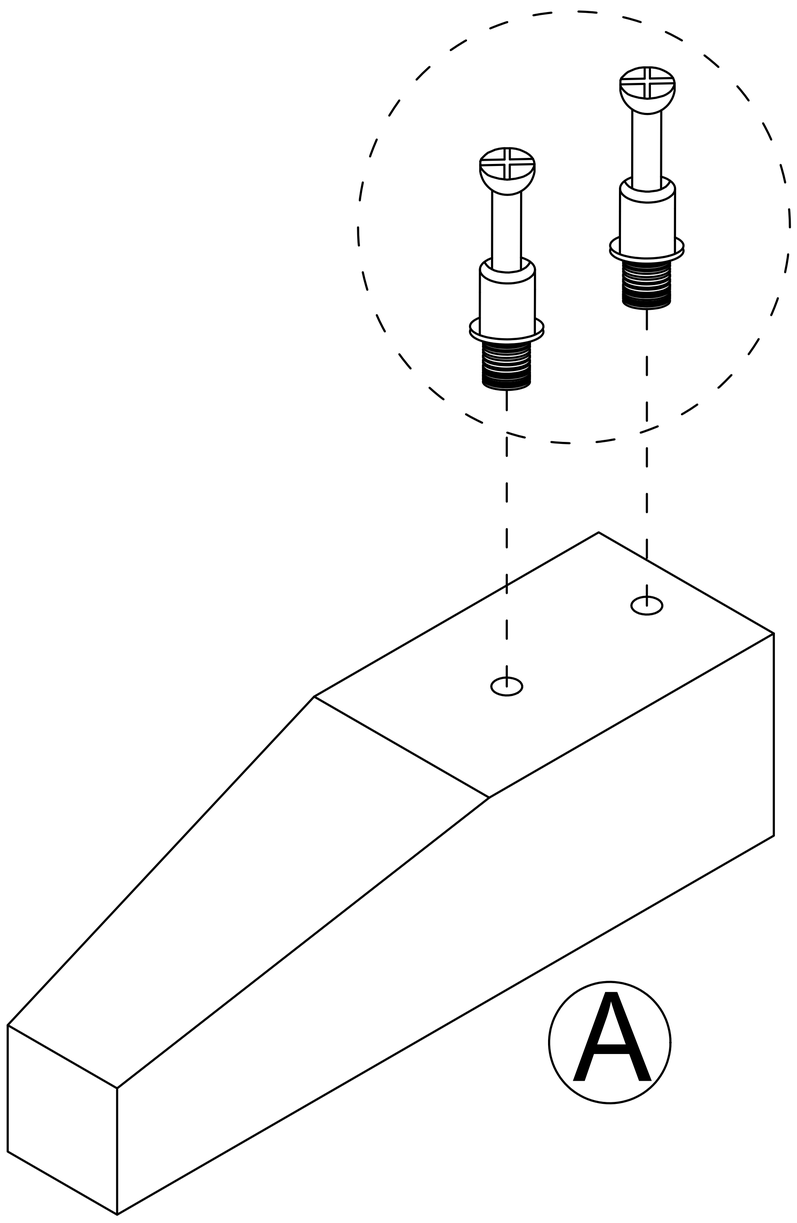

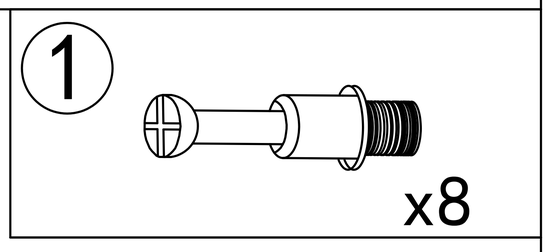

Steps and objects x4

Step 2

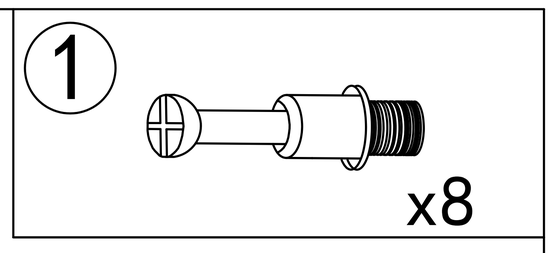

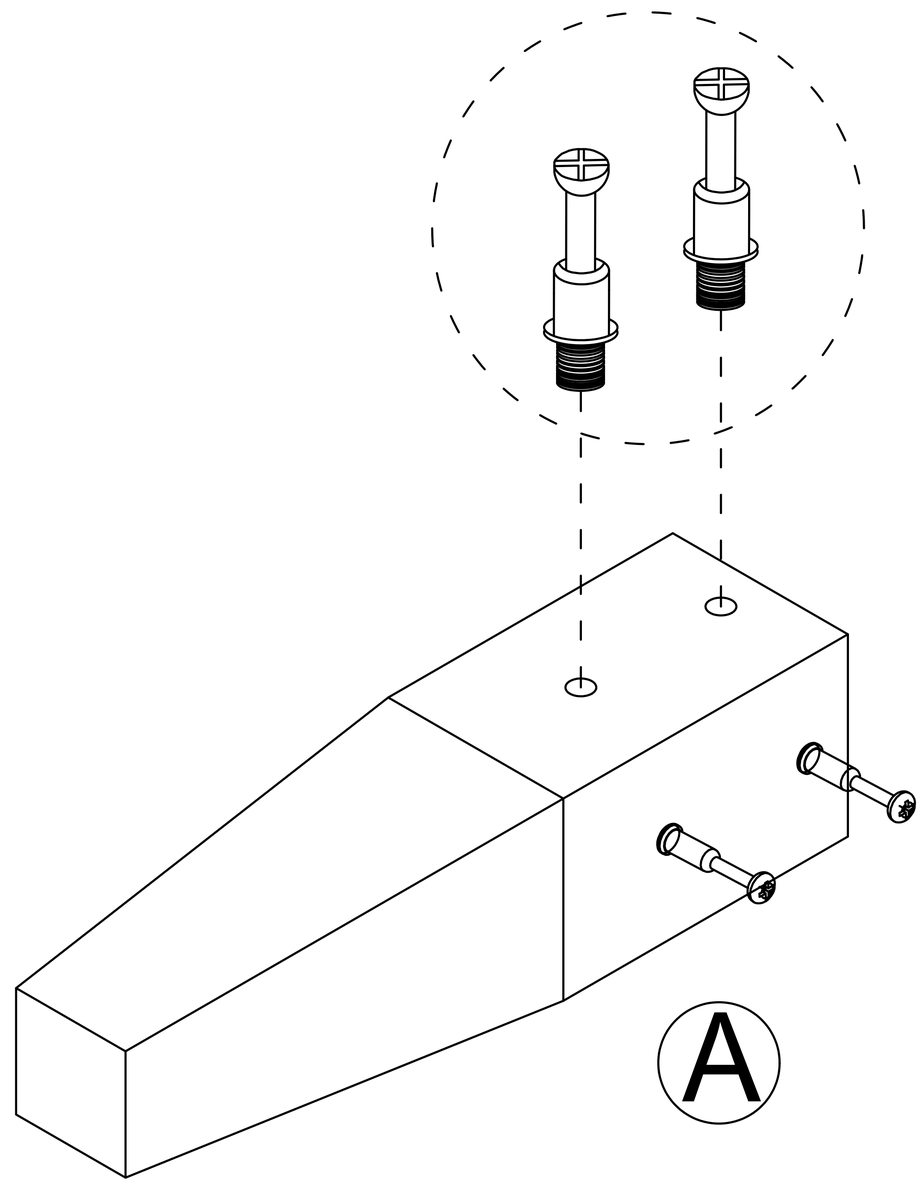

Steps and objects x4

Step 3

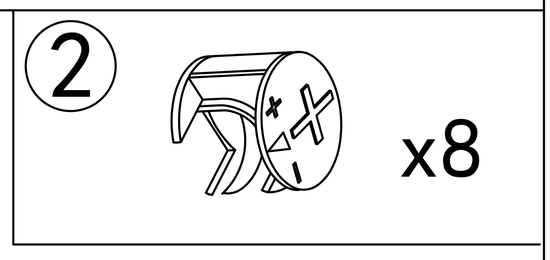

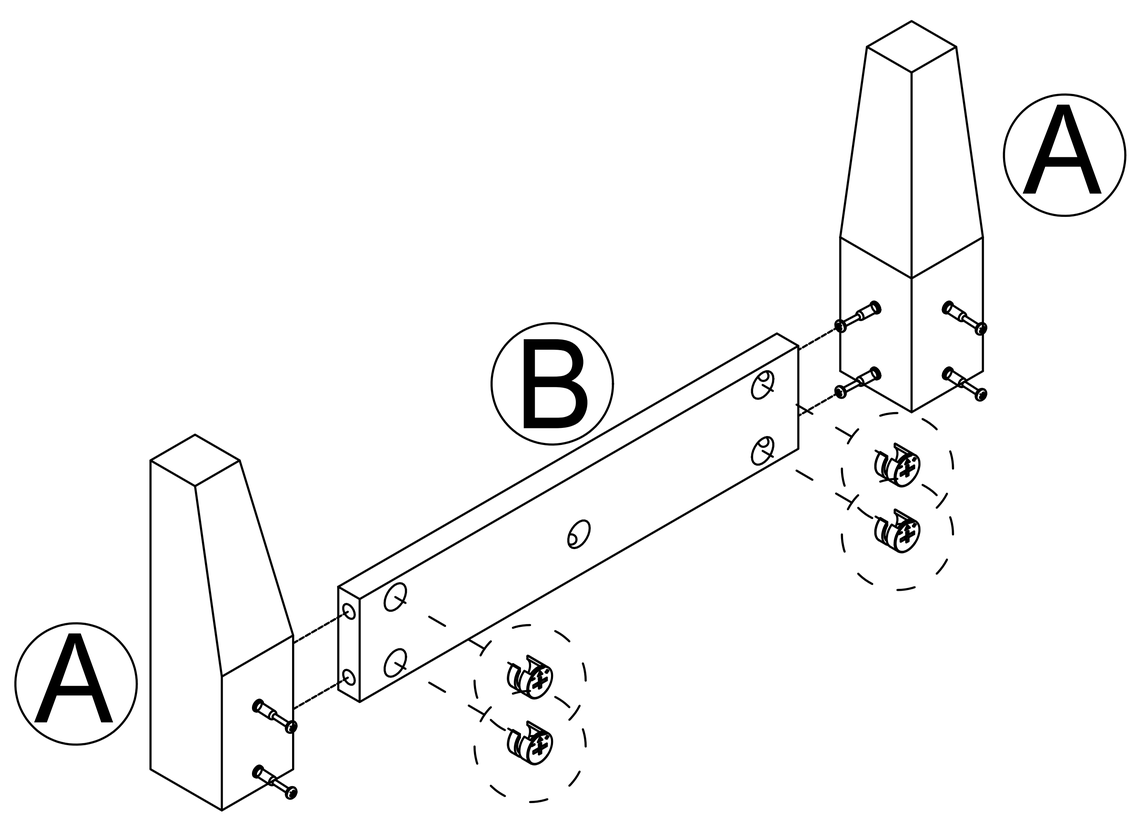

Steps and objects x2

Step 4

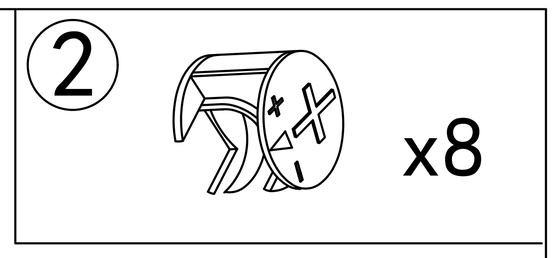

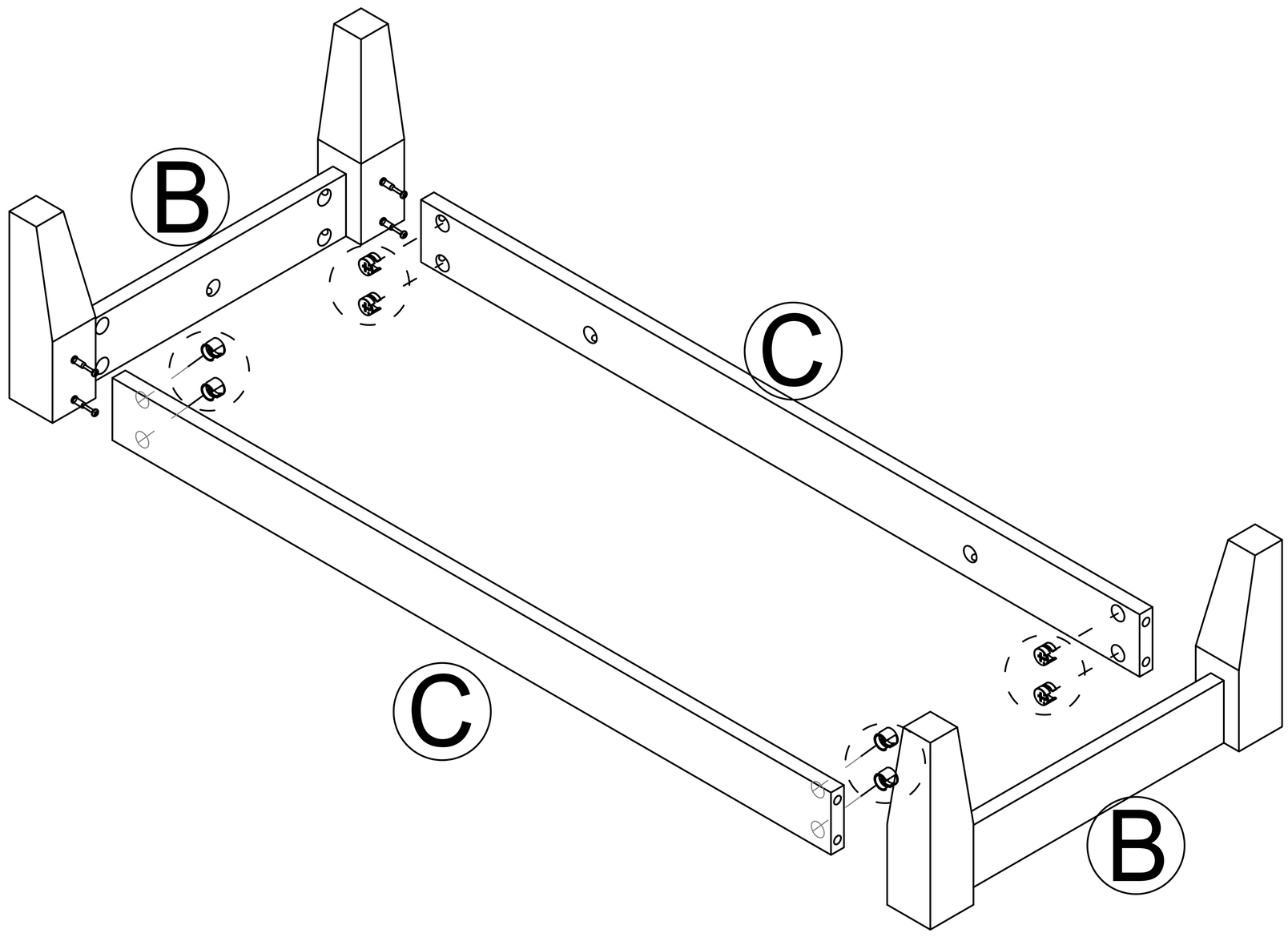

Step 5

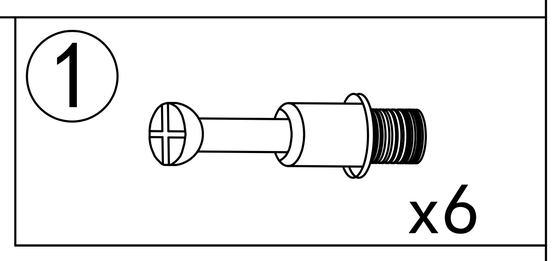

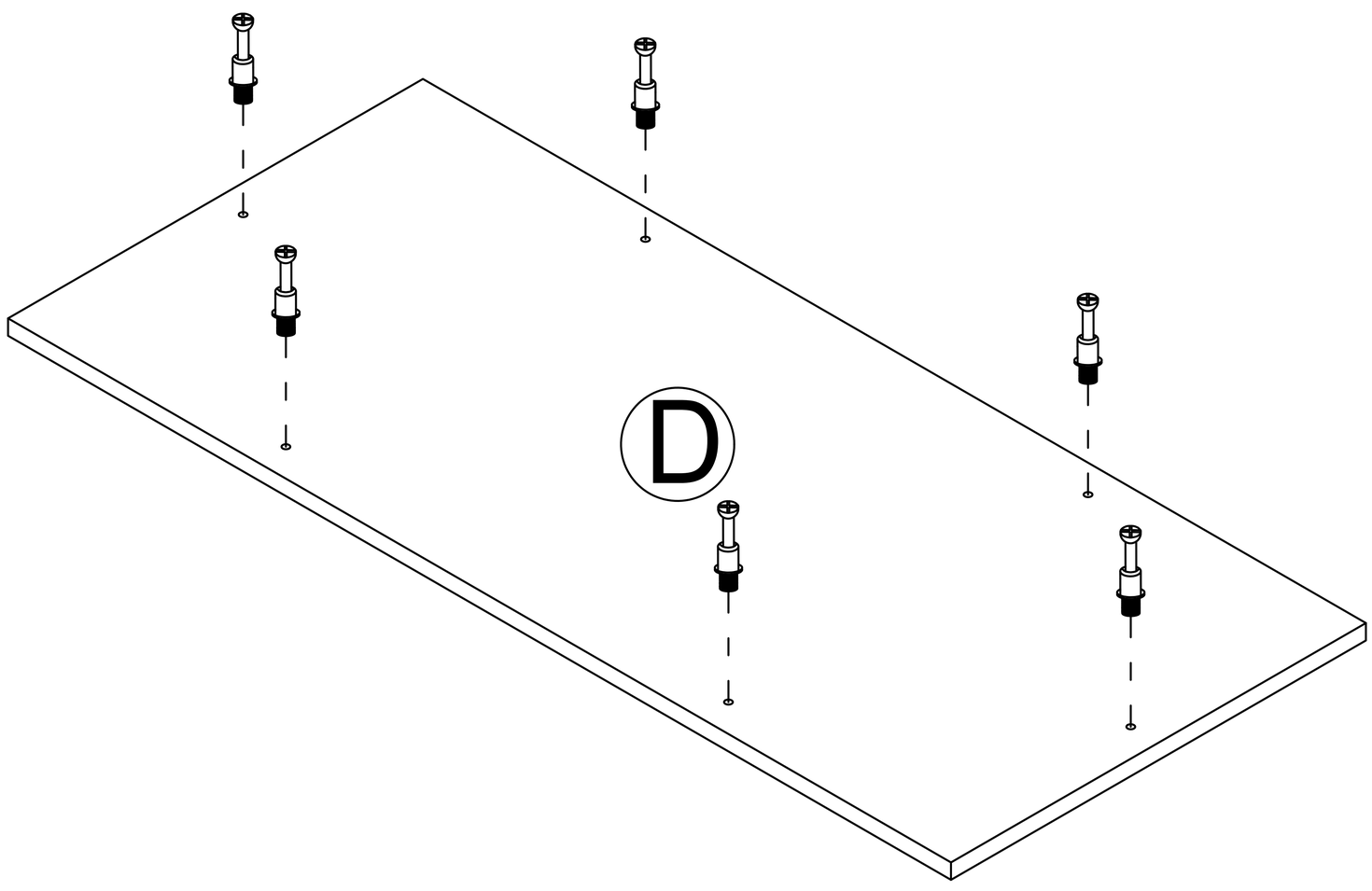

Step 6

2 x6

3 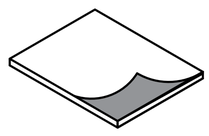 x4

Tear off release paper and stick the black foot pad on the board

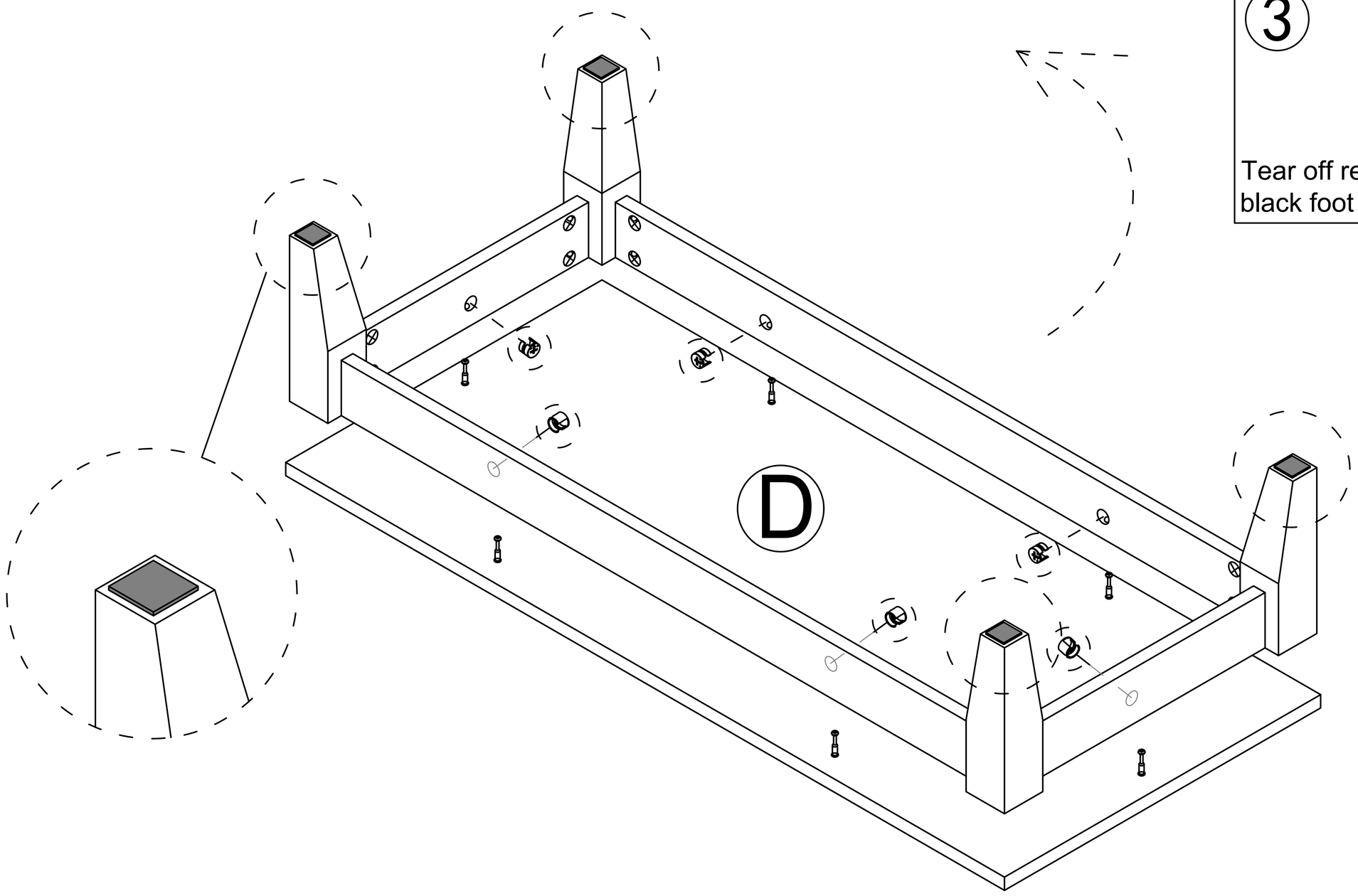

Step 7

1 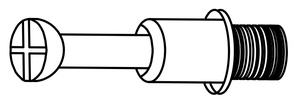 x4

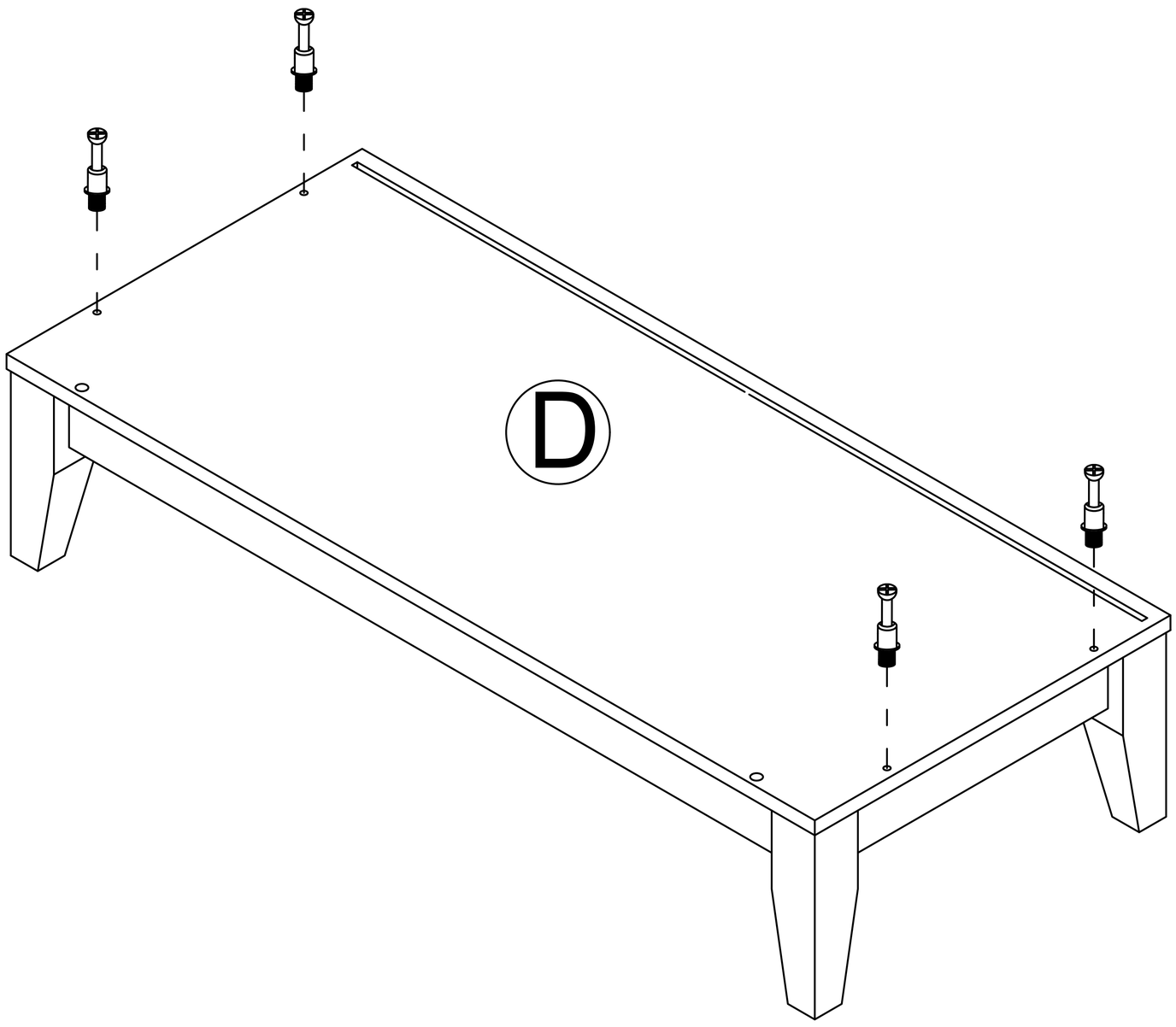

Step 8

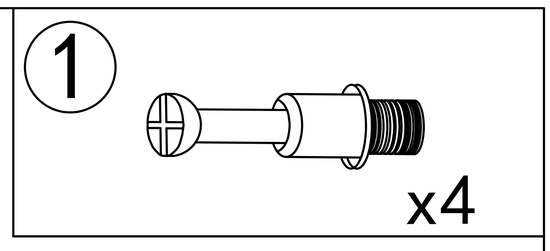

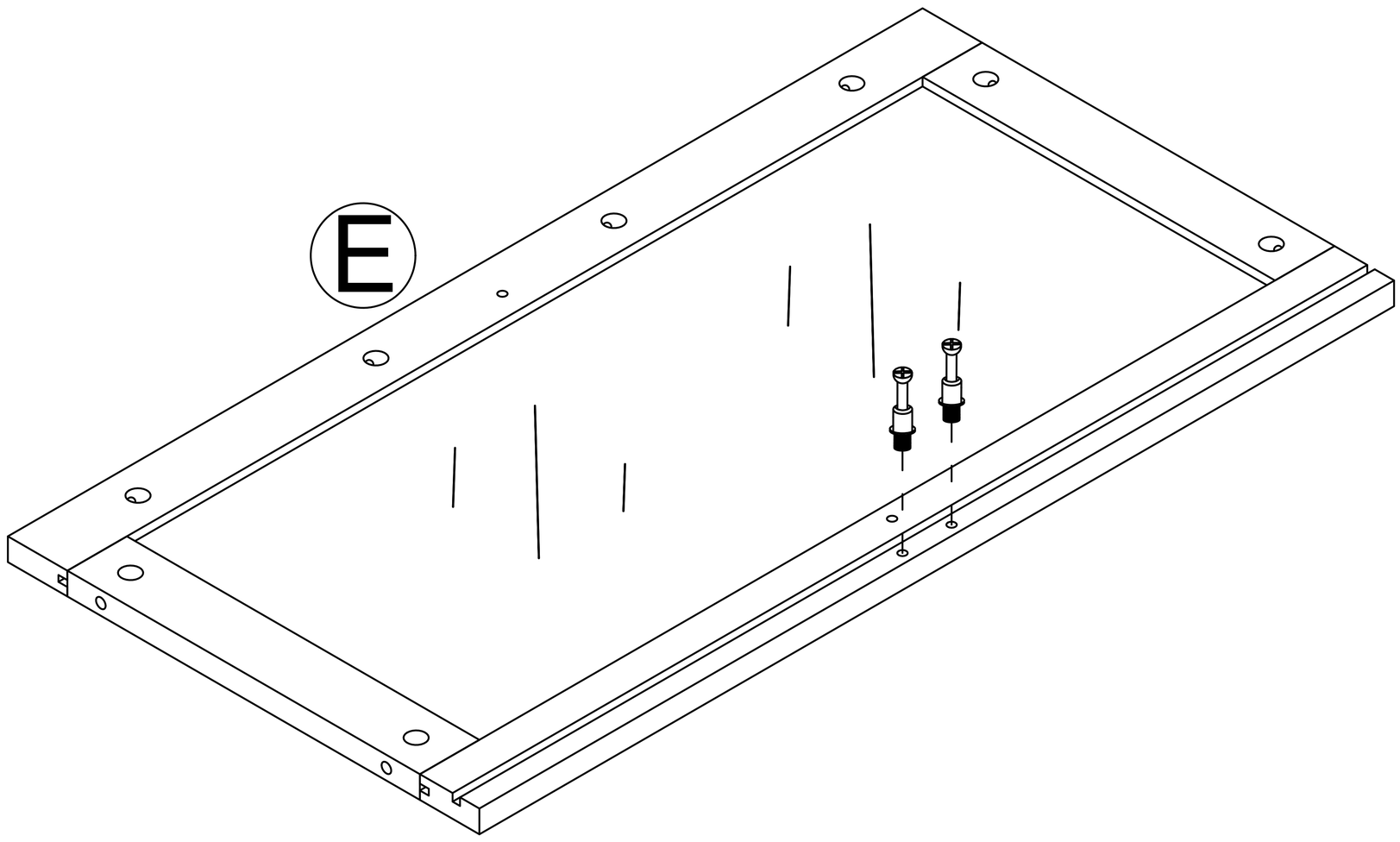

Steps and objects x2

Step 9

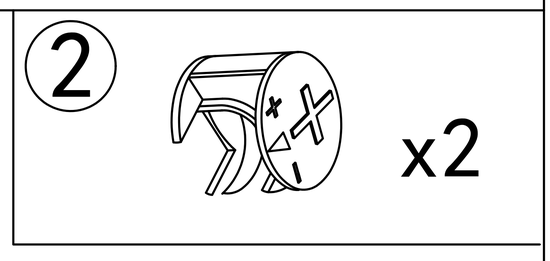

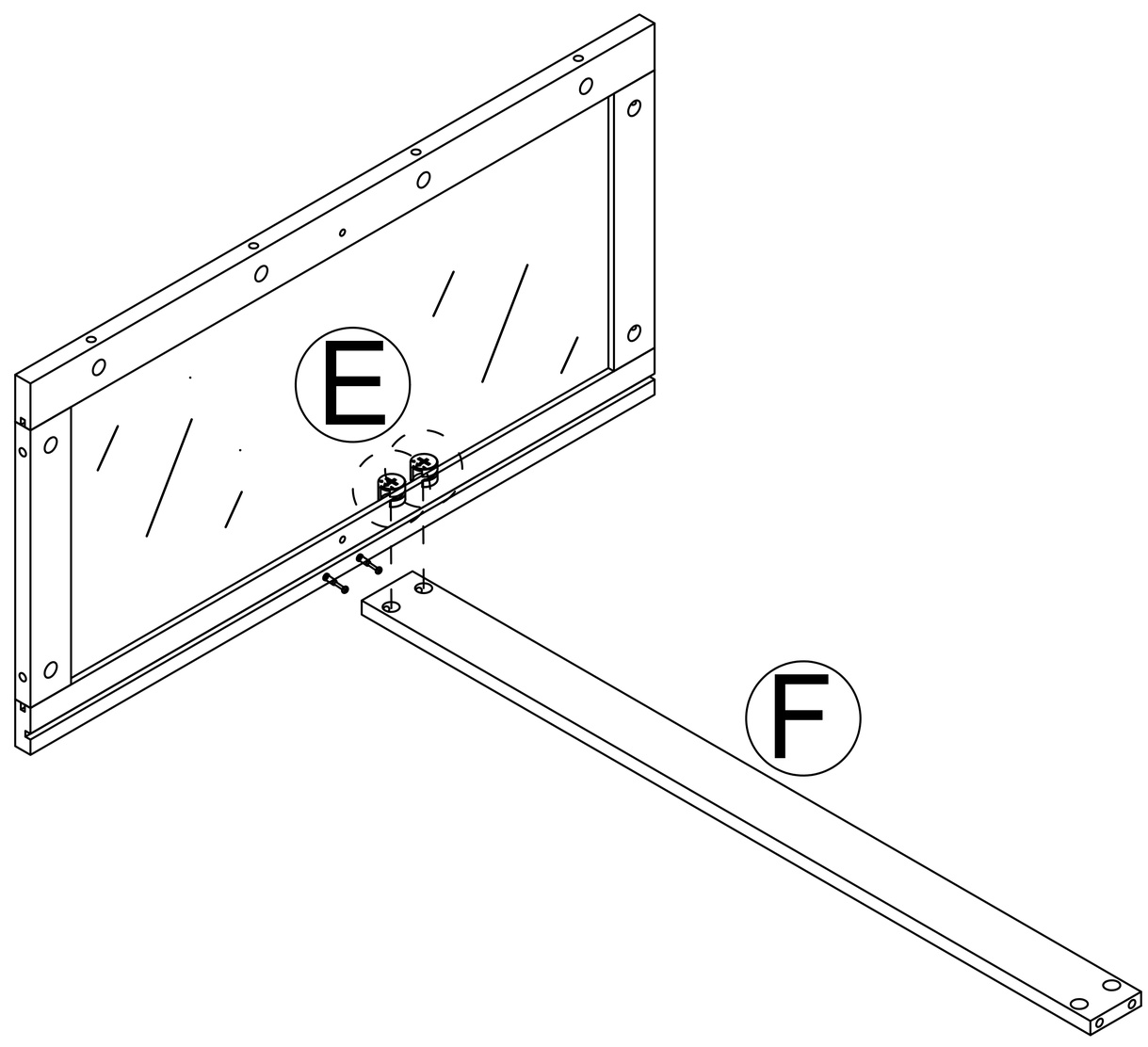

It is recommended to have two people assist with the installation.

Step 10

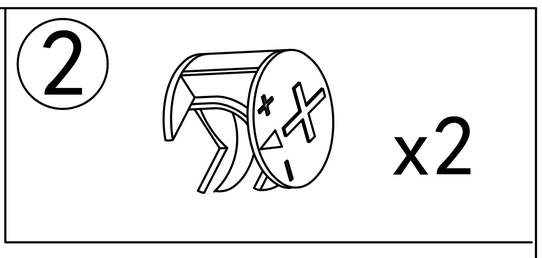

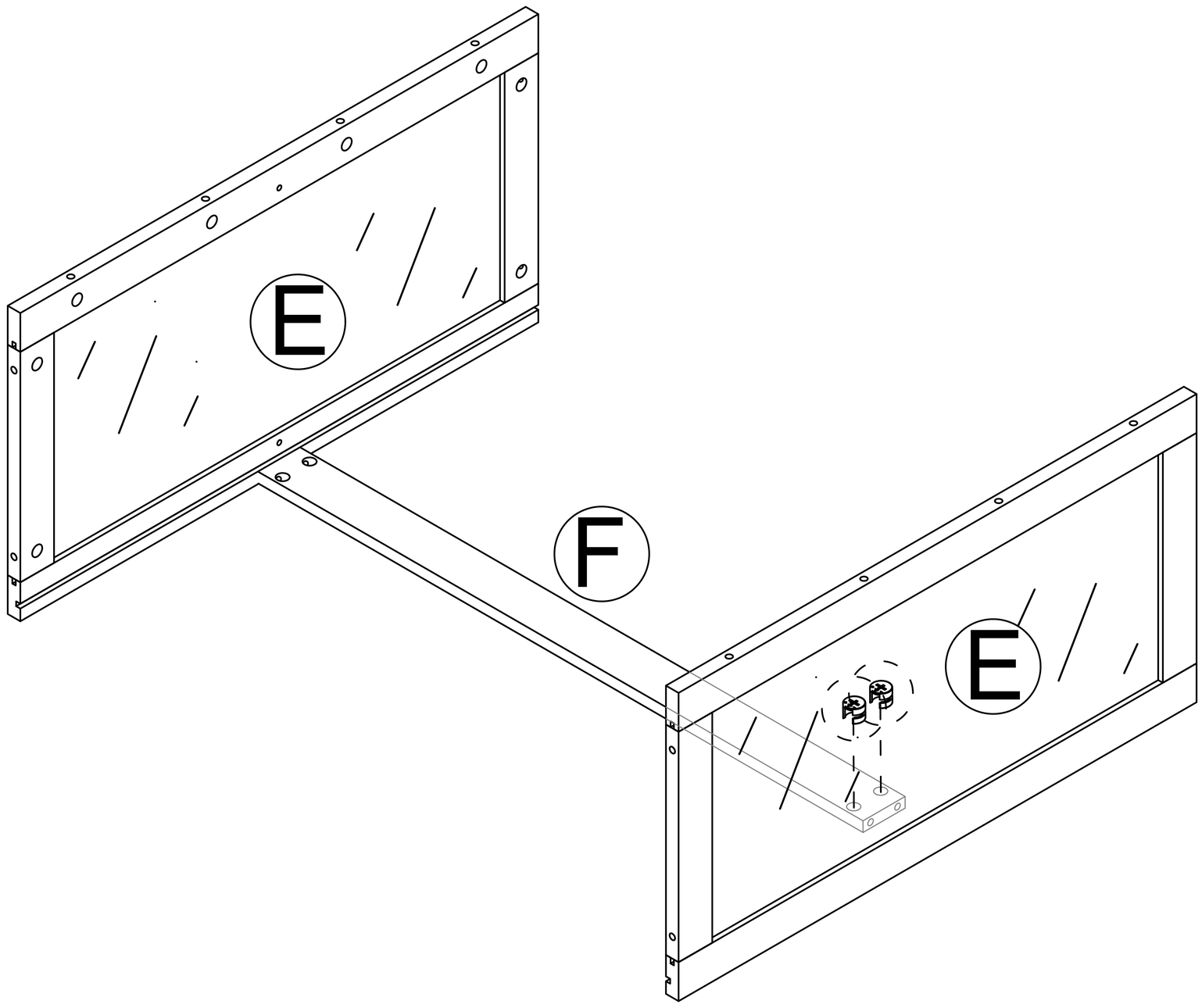

It is recommended to have two people assist with the installation.

Step 11

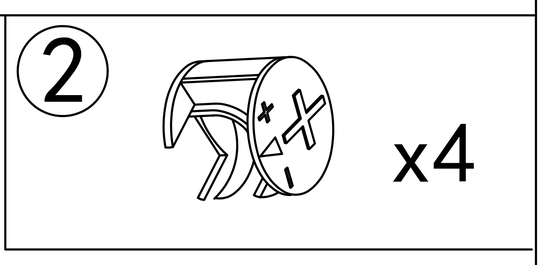

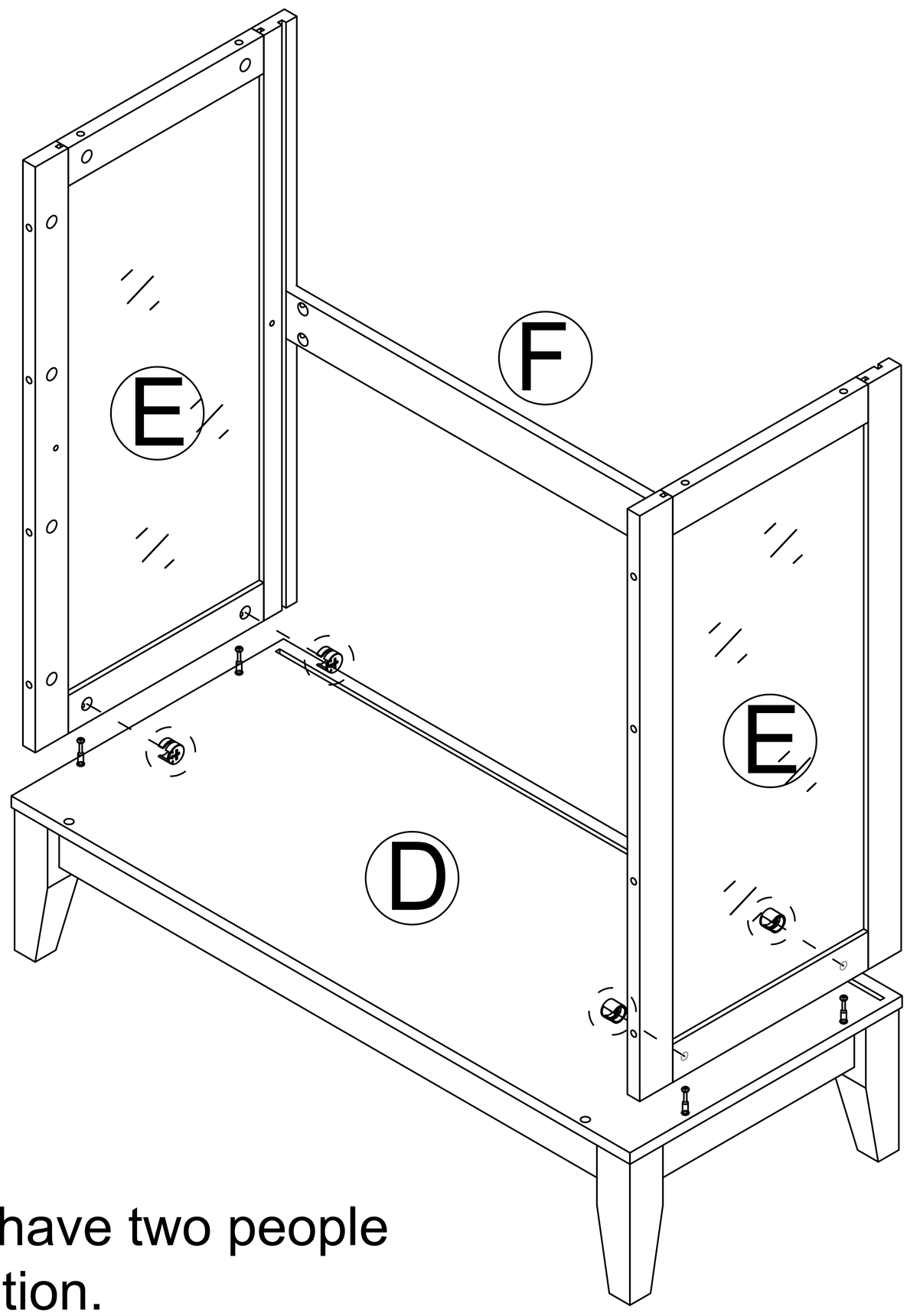

It is recommended to have two people assist with the installation.

Step 12

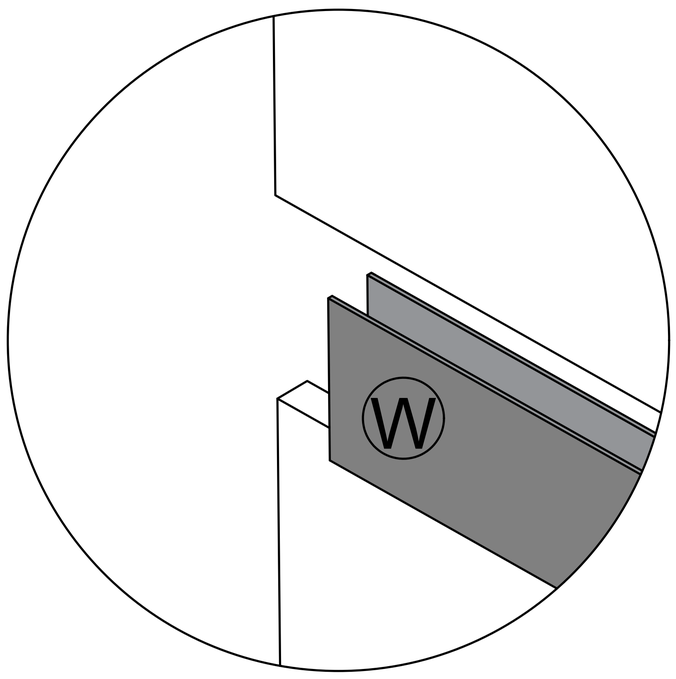

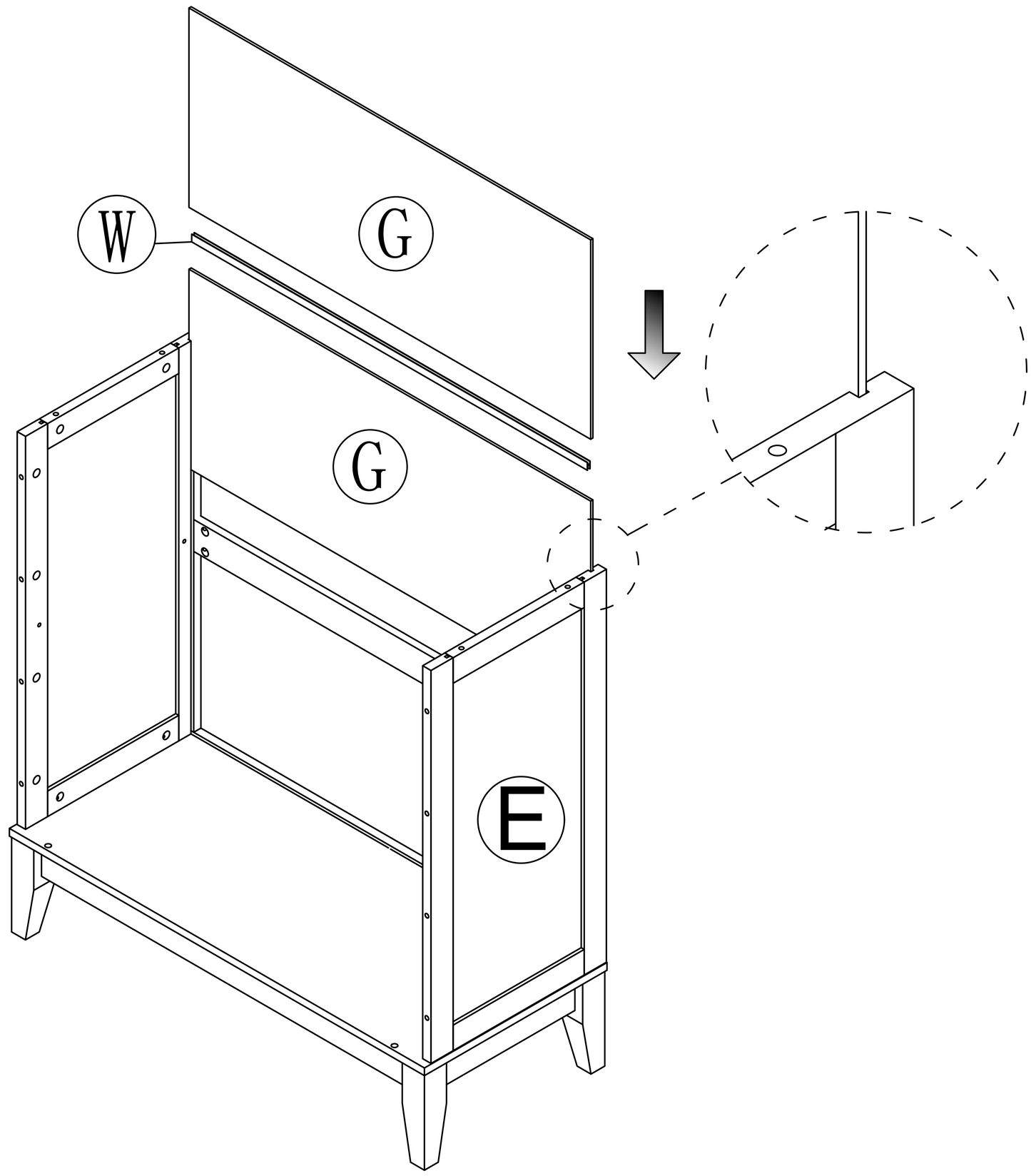

Step 13

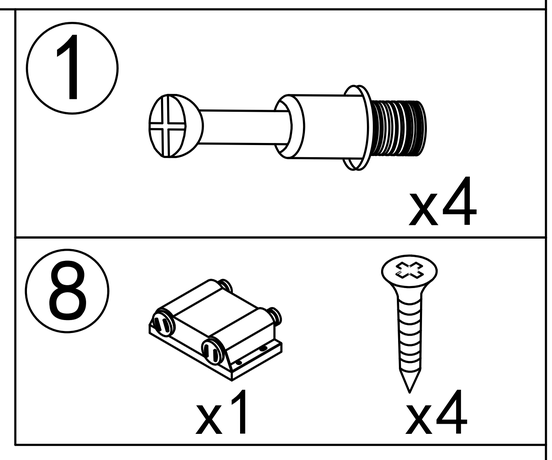

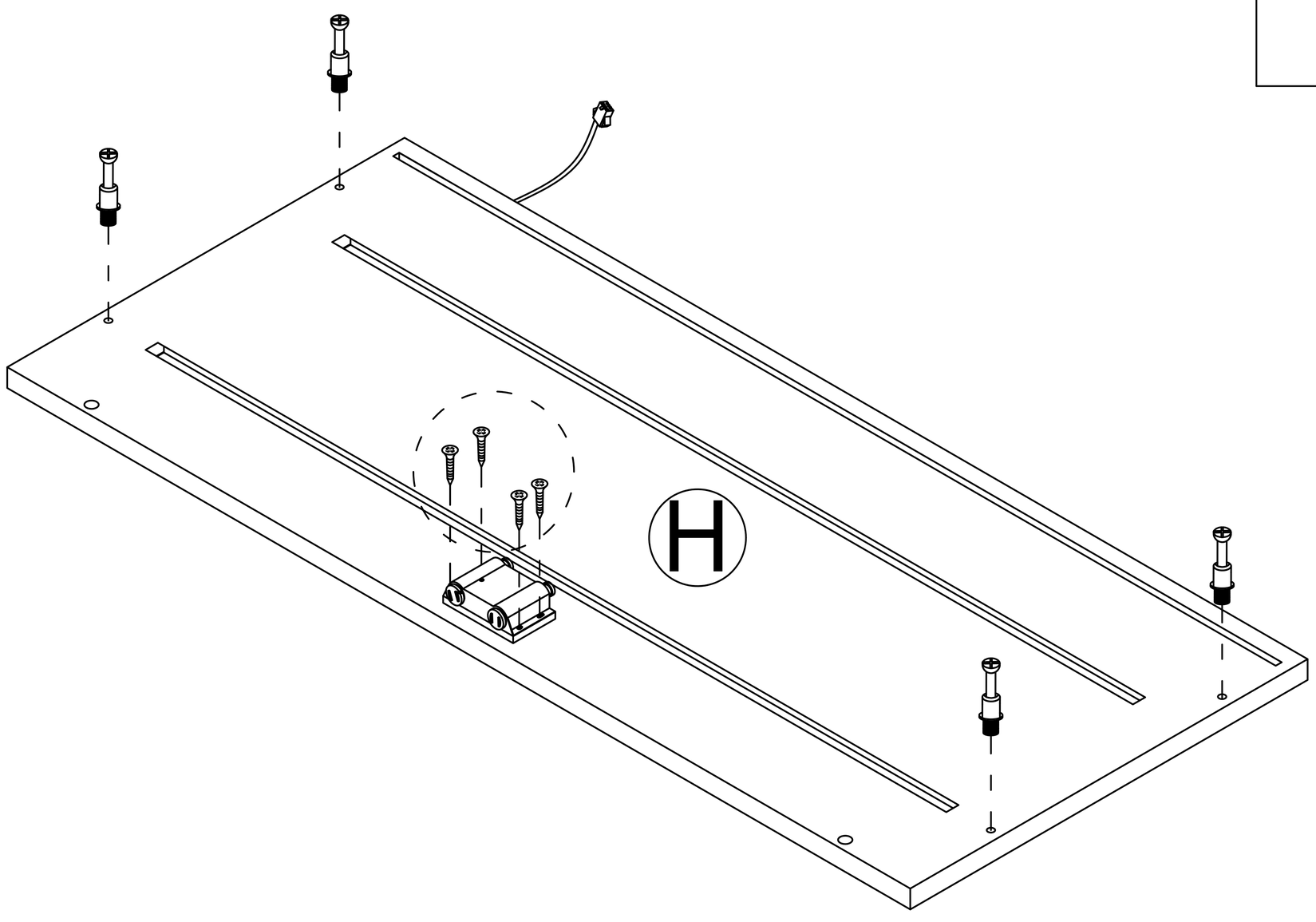

Step 14

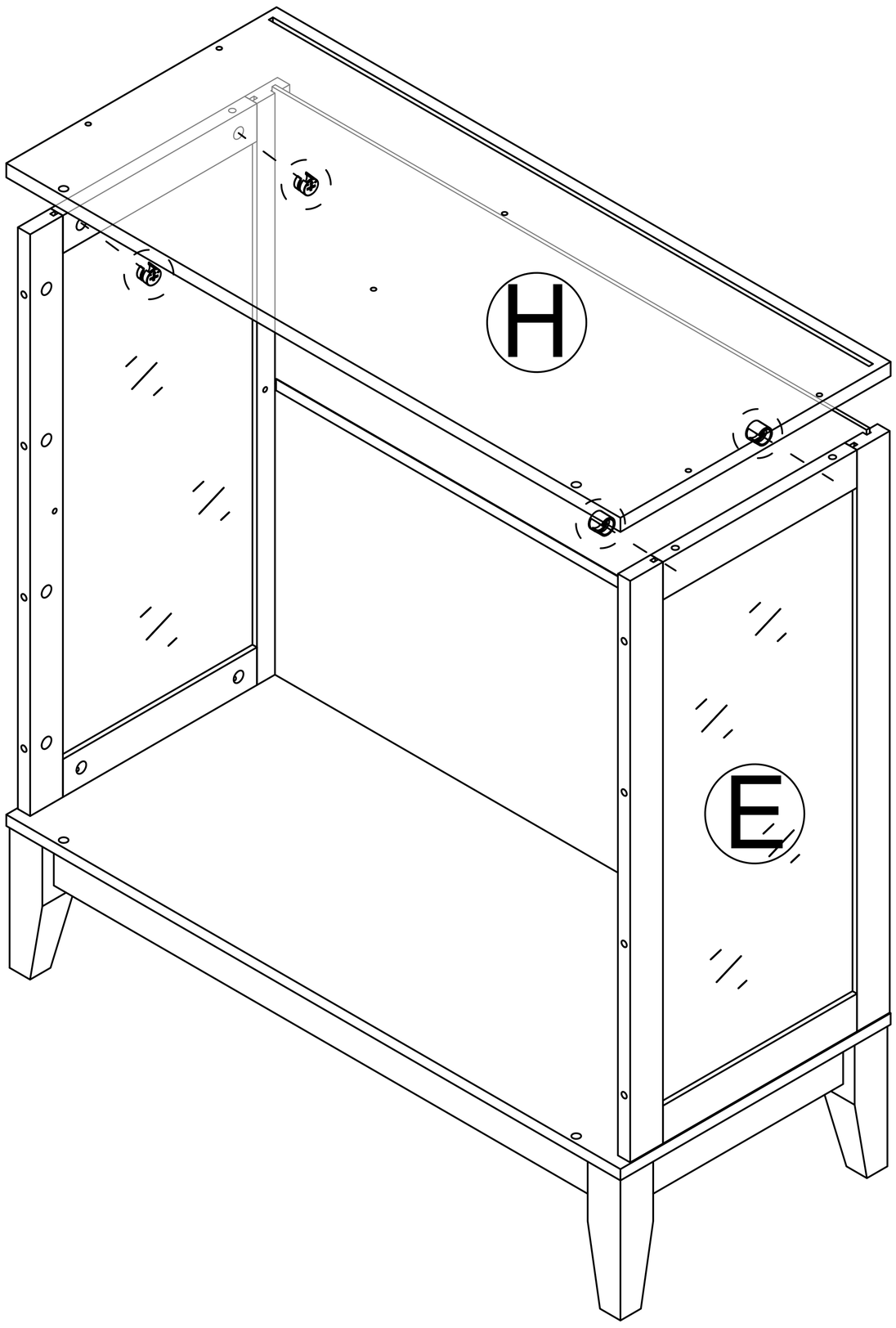

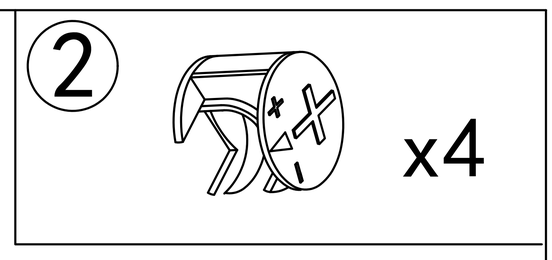

Step 15

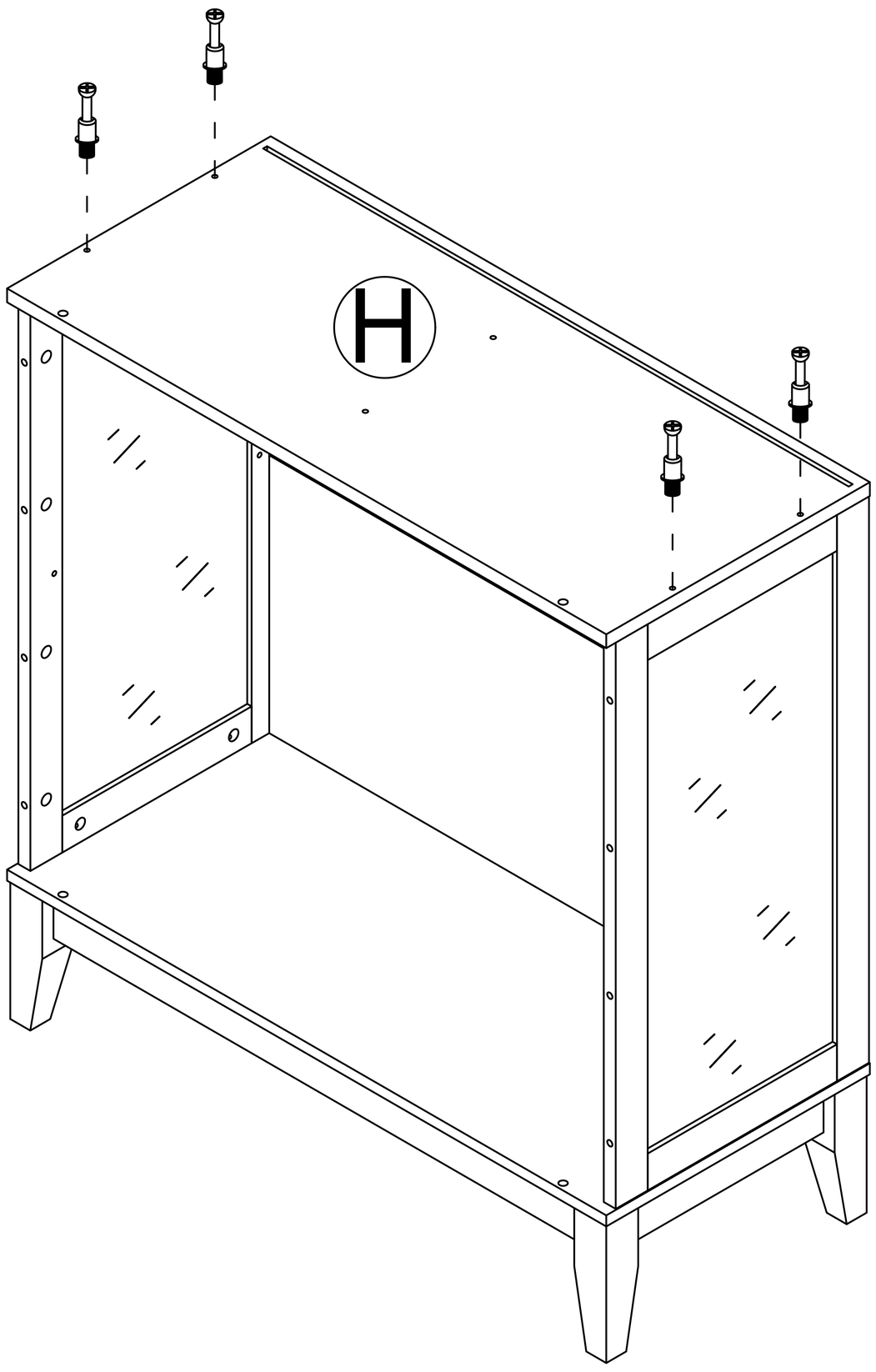

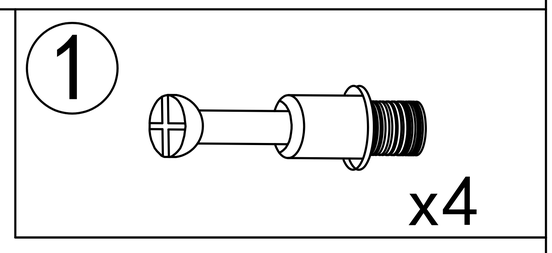

Step 16

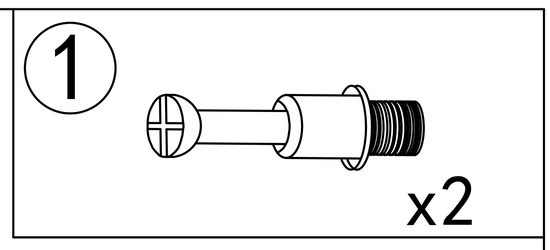

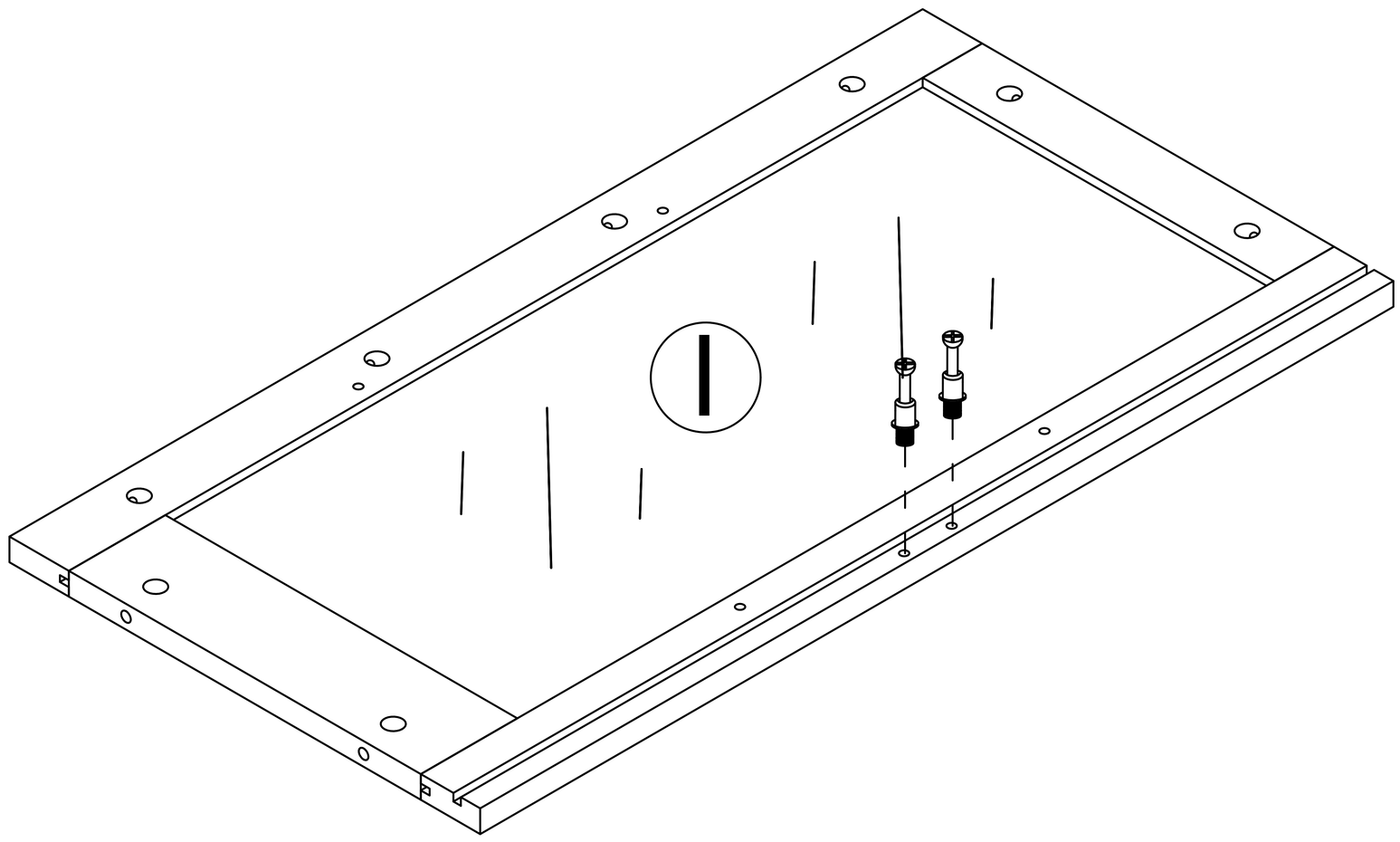

Step 17

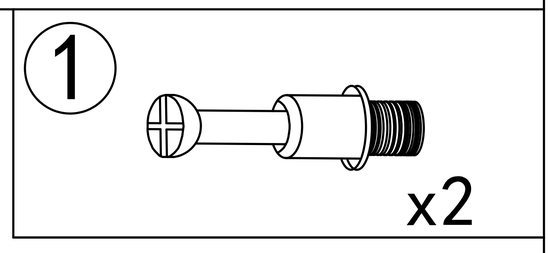

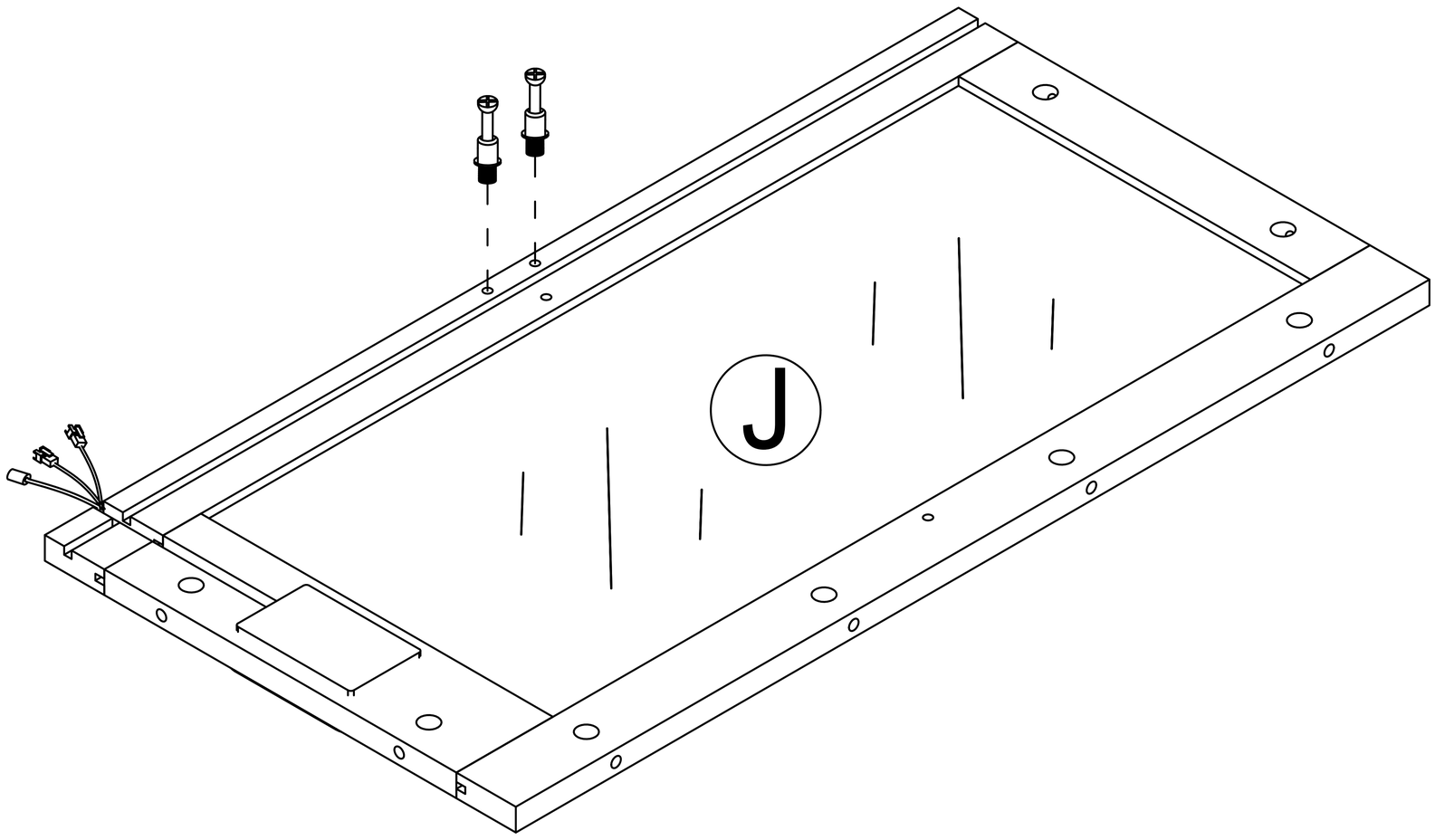

Step 18

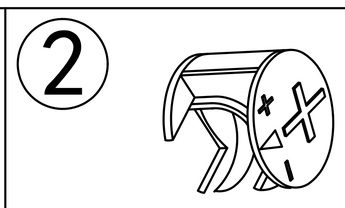

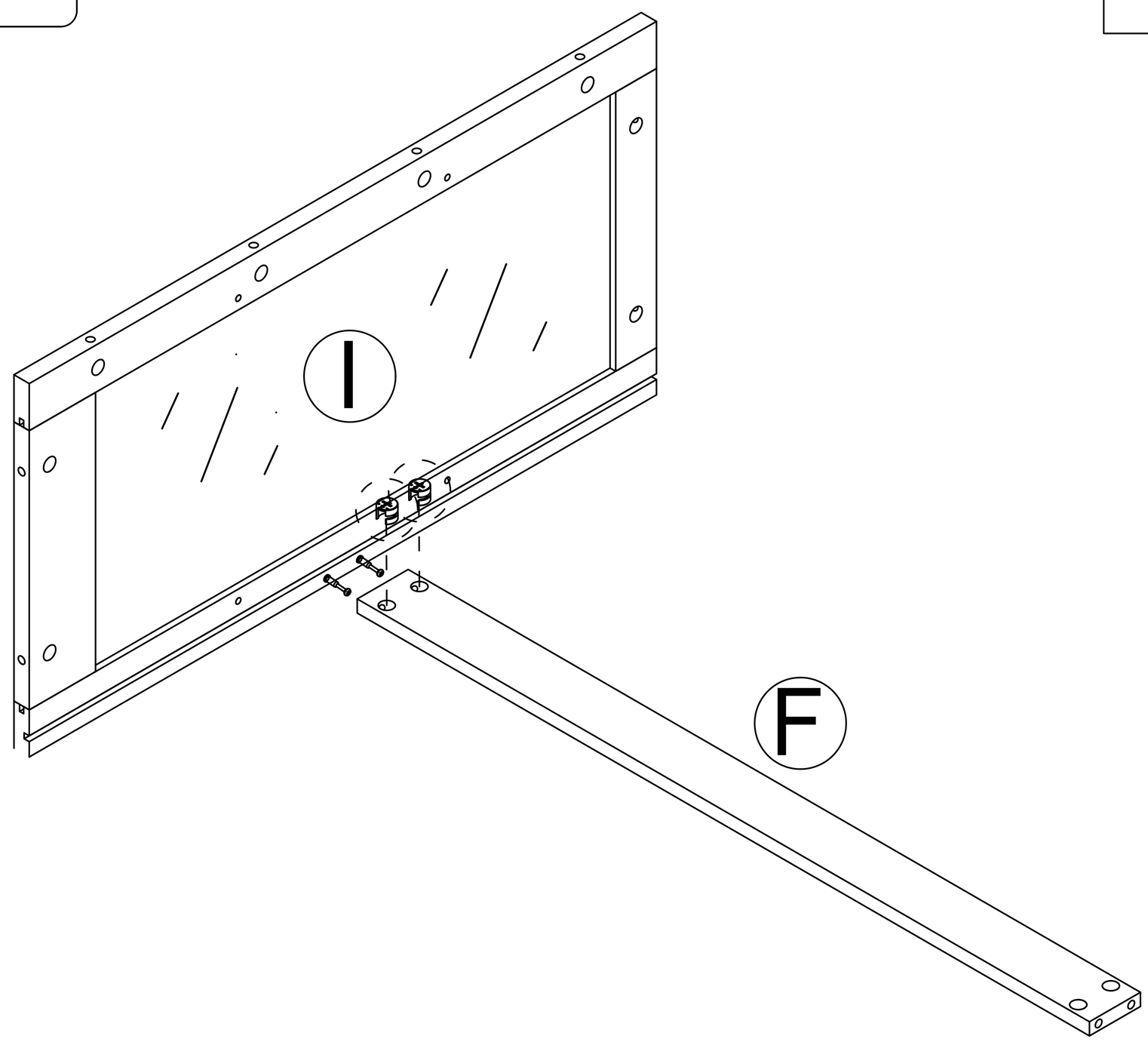

It is recommended to have two people assist with the installation.

Step 19

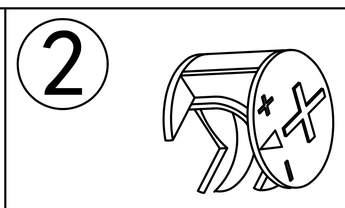

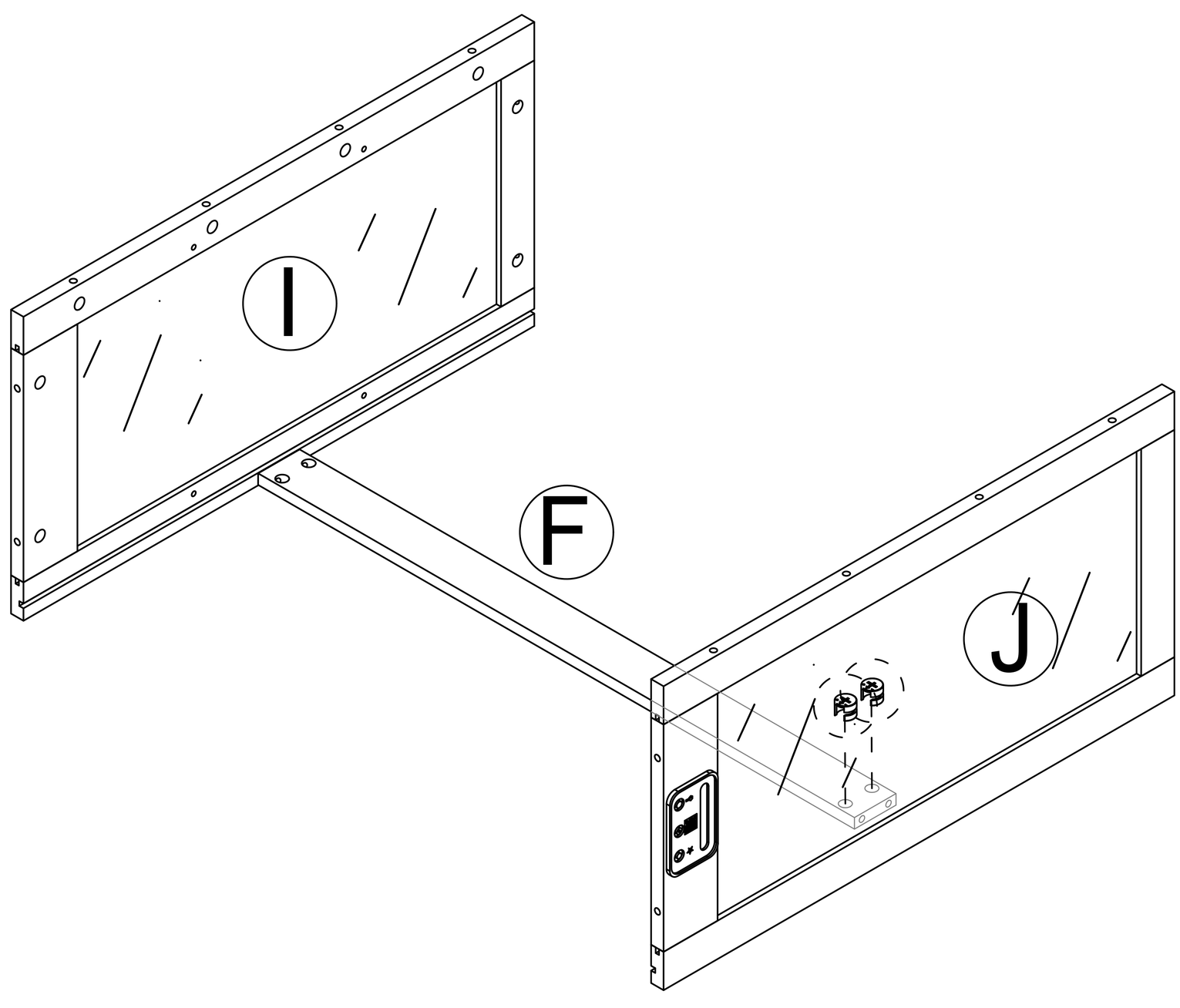

It is recommended to have two people assist with the installation.

Step 20

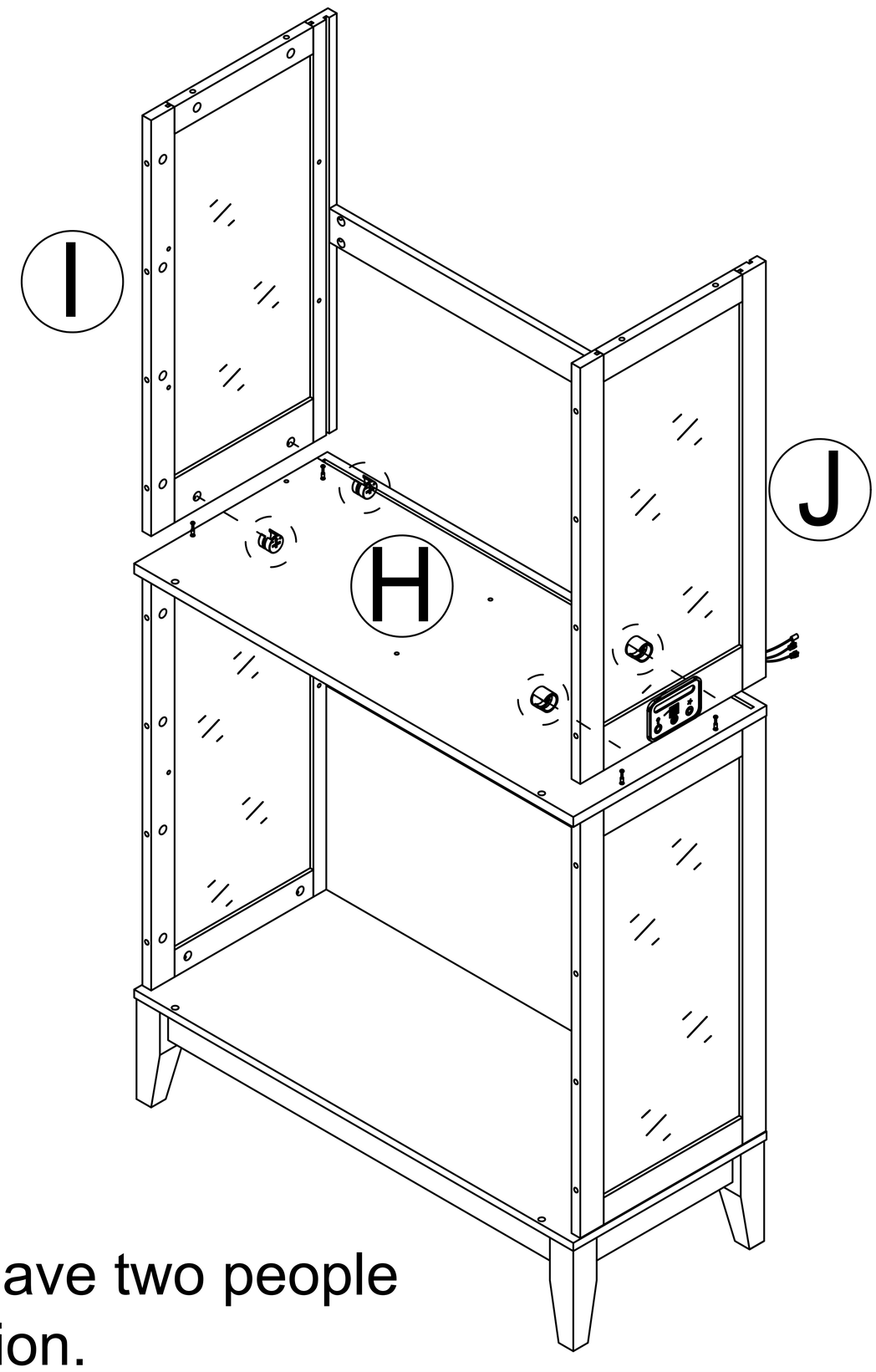

It is recommended to have two people assist with the installation.

Step 21

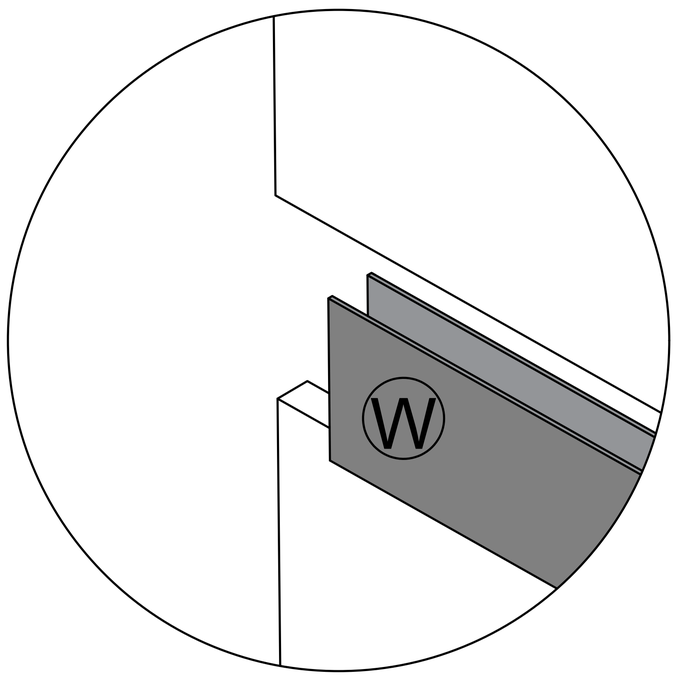

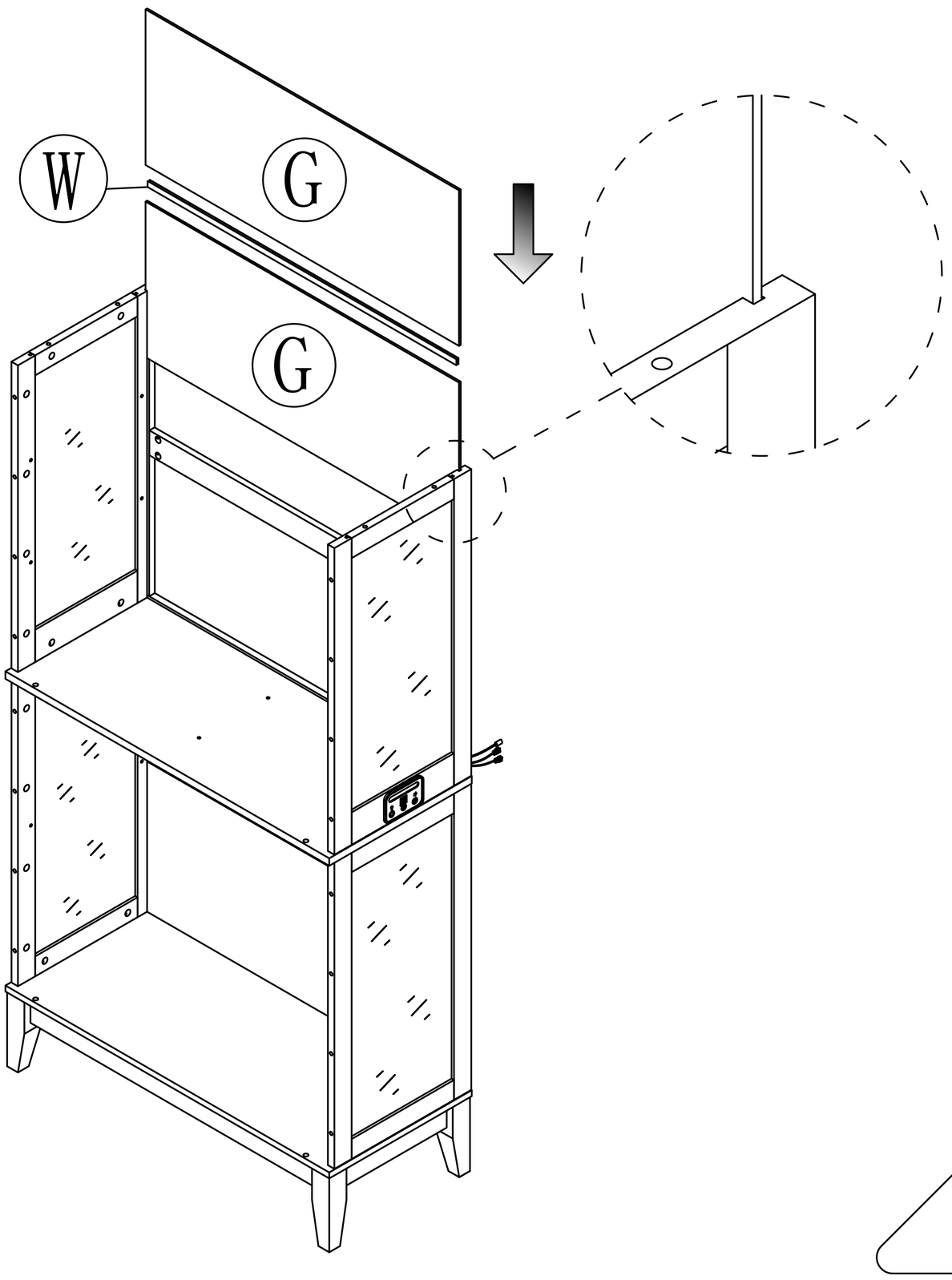

Step 22

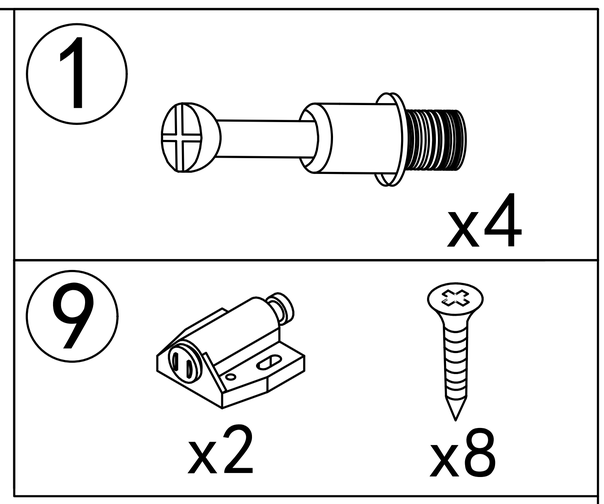

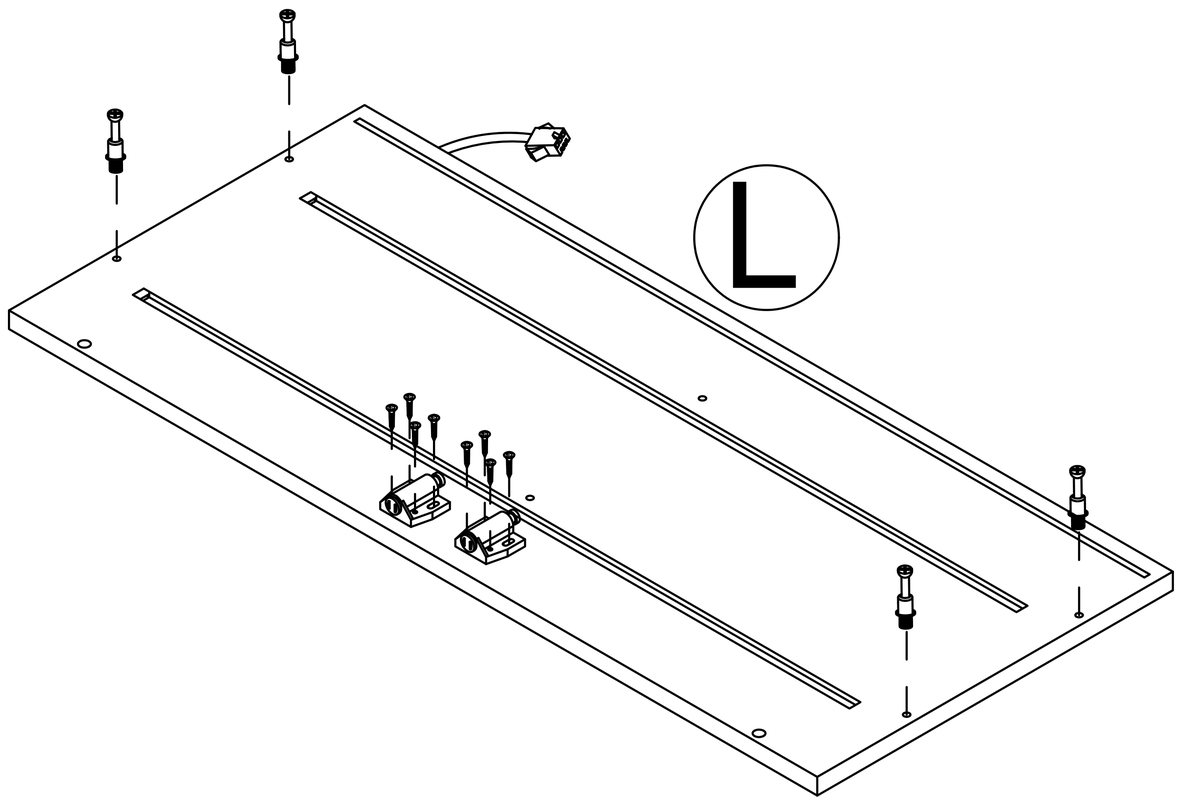

Step 23

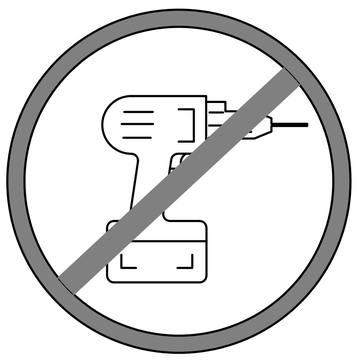

Prohibited: Electric screwdriver use.

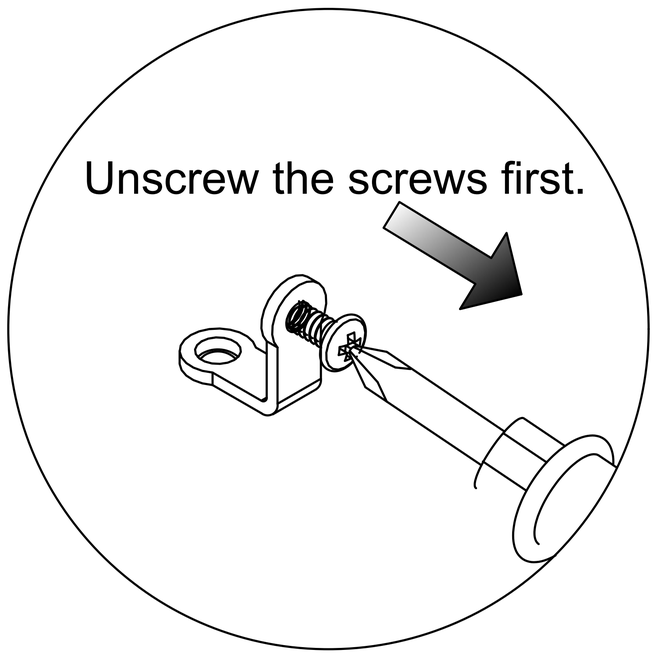

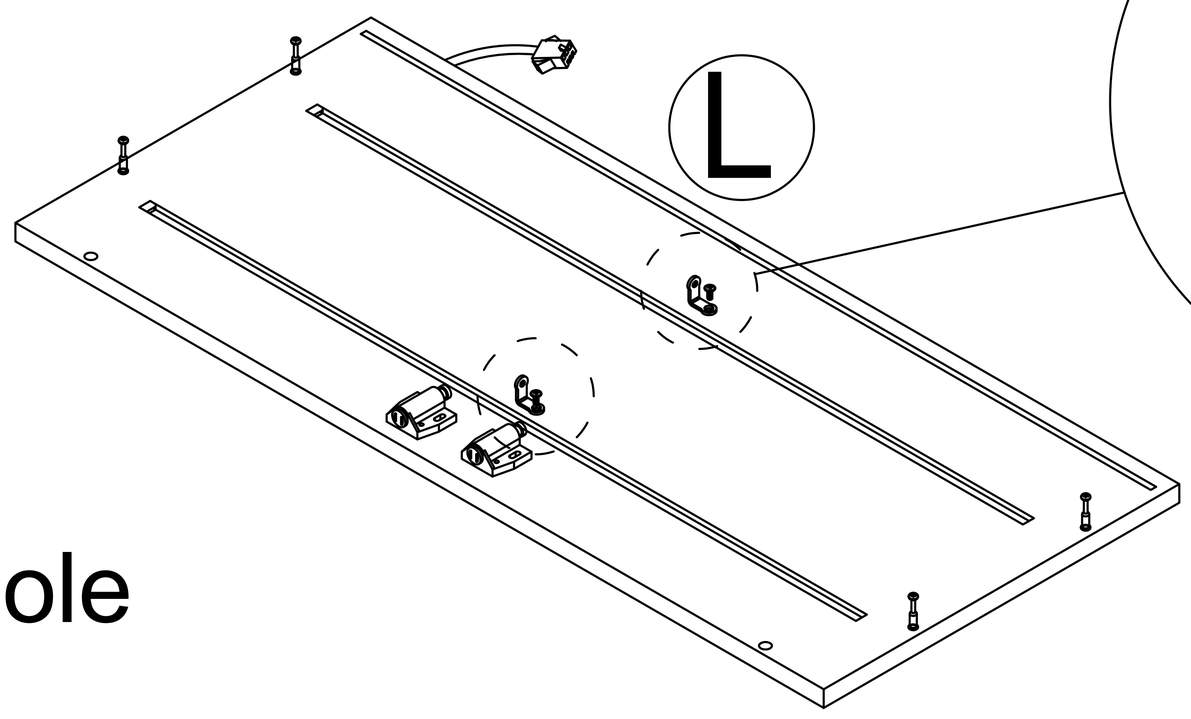

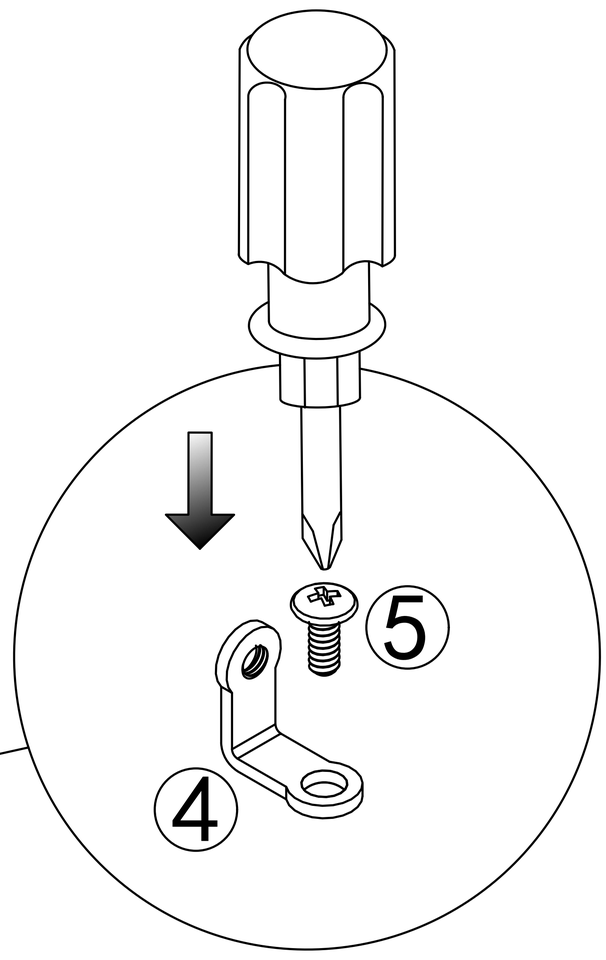

Install this hole

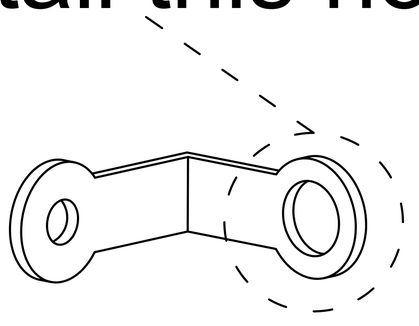

Do not fully tighten the screws.

Step 24

Do not fully tighten the screws.

4 x2	5 x2

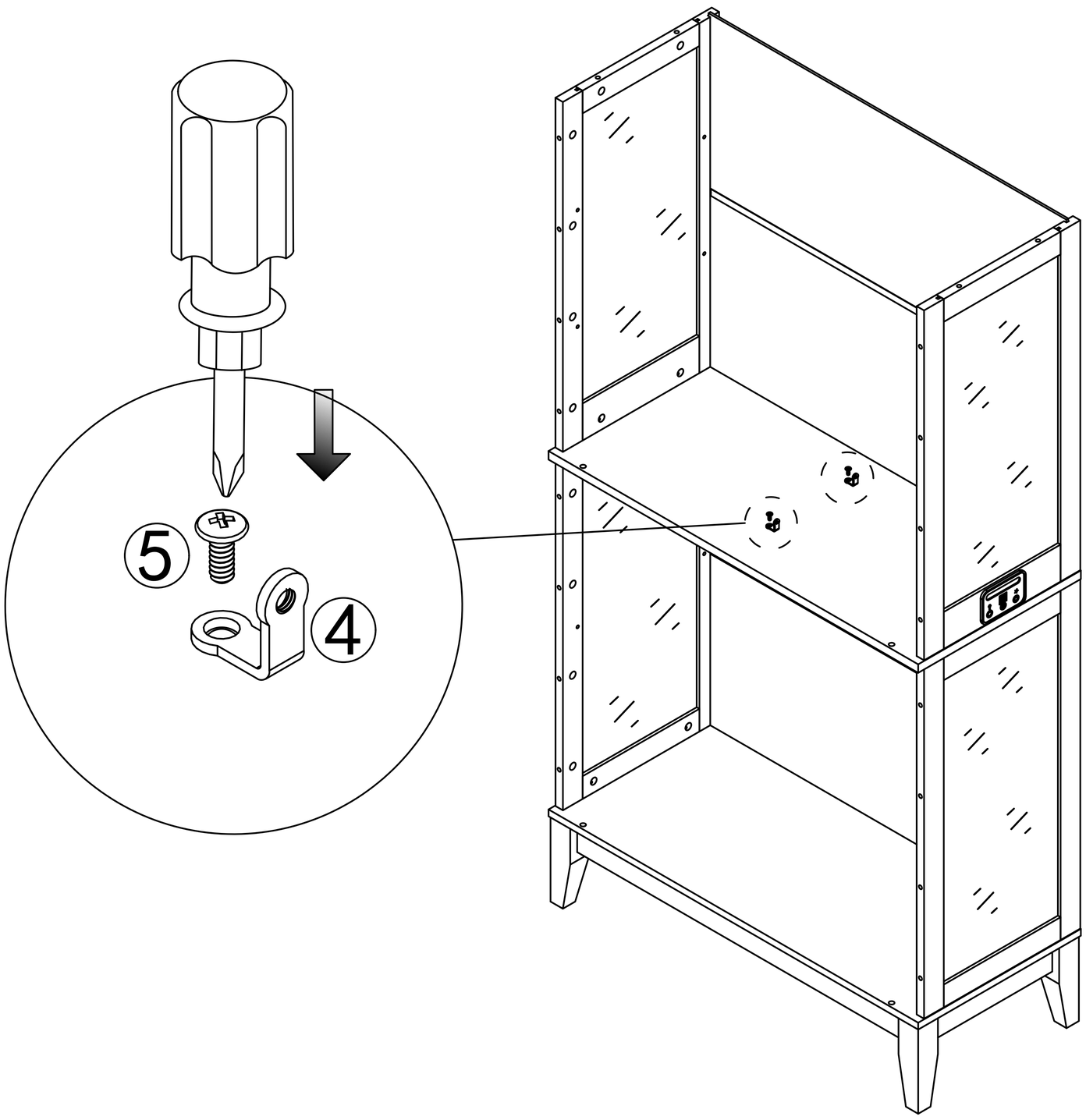

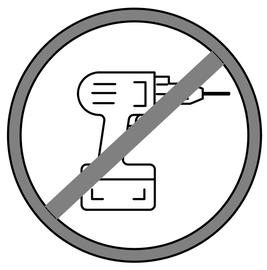

Prohibited: Electric screwdriver use.

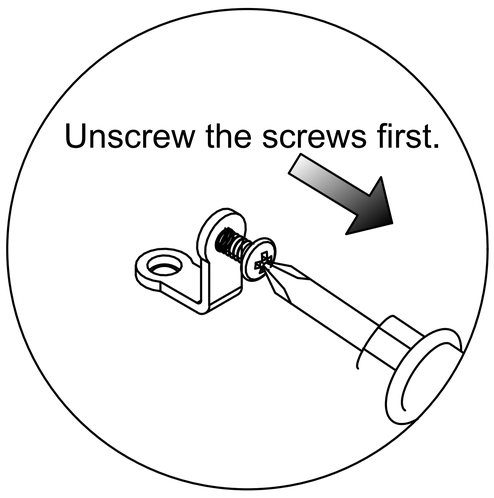

Install this hole

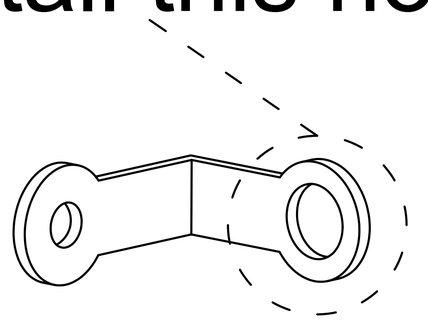

Step 25

2 x4

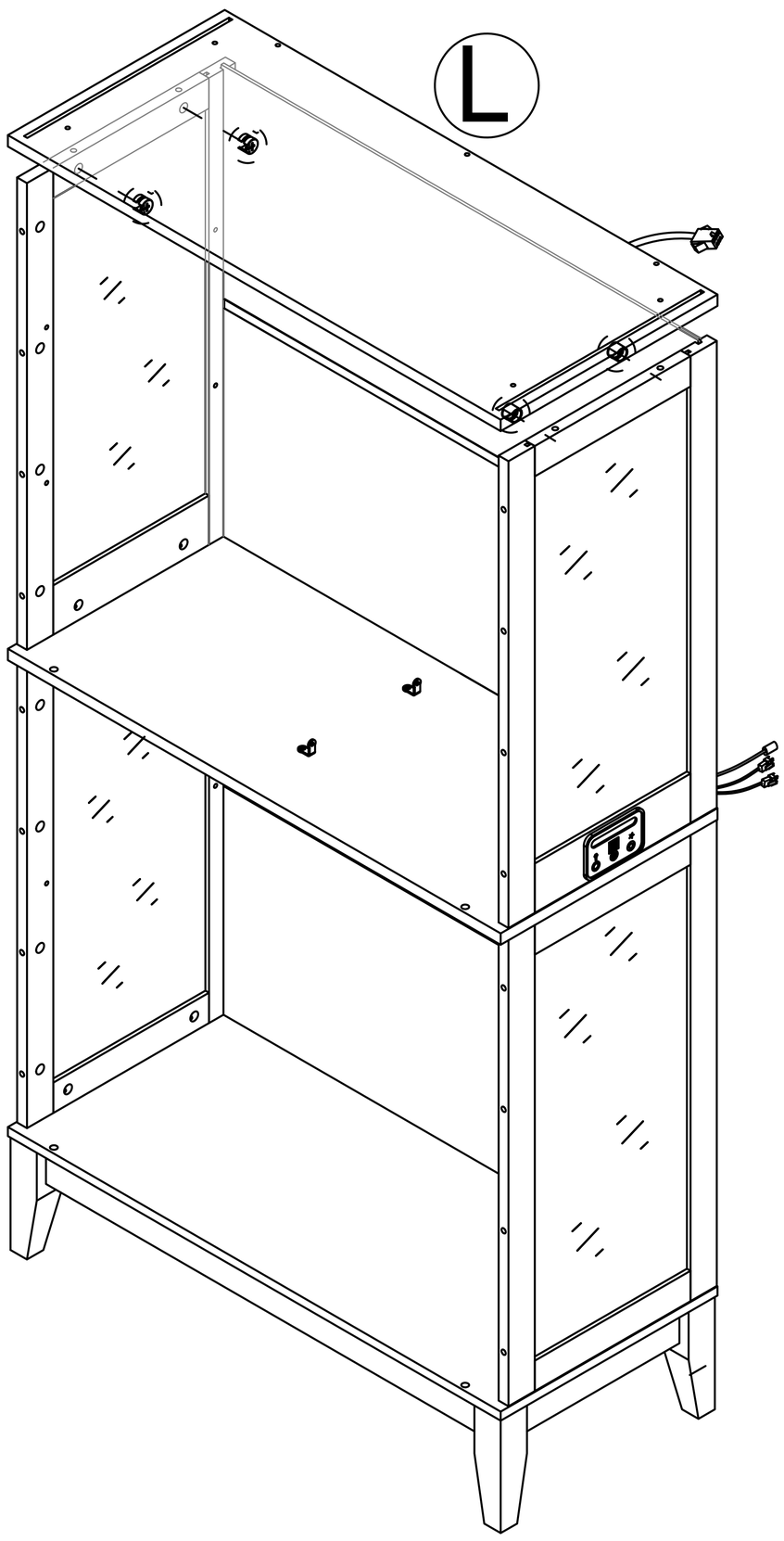

Step 26

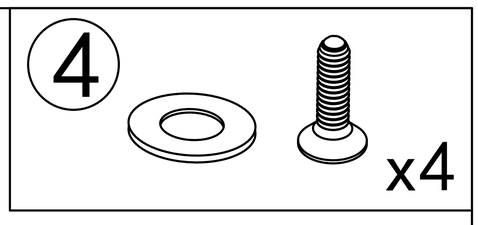

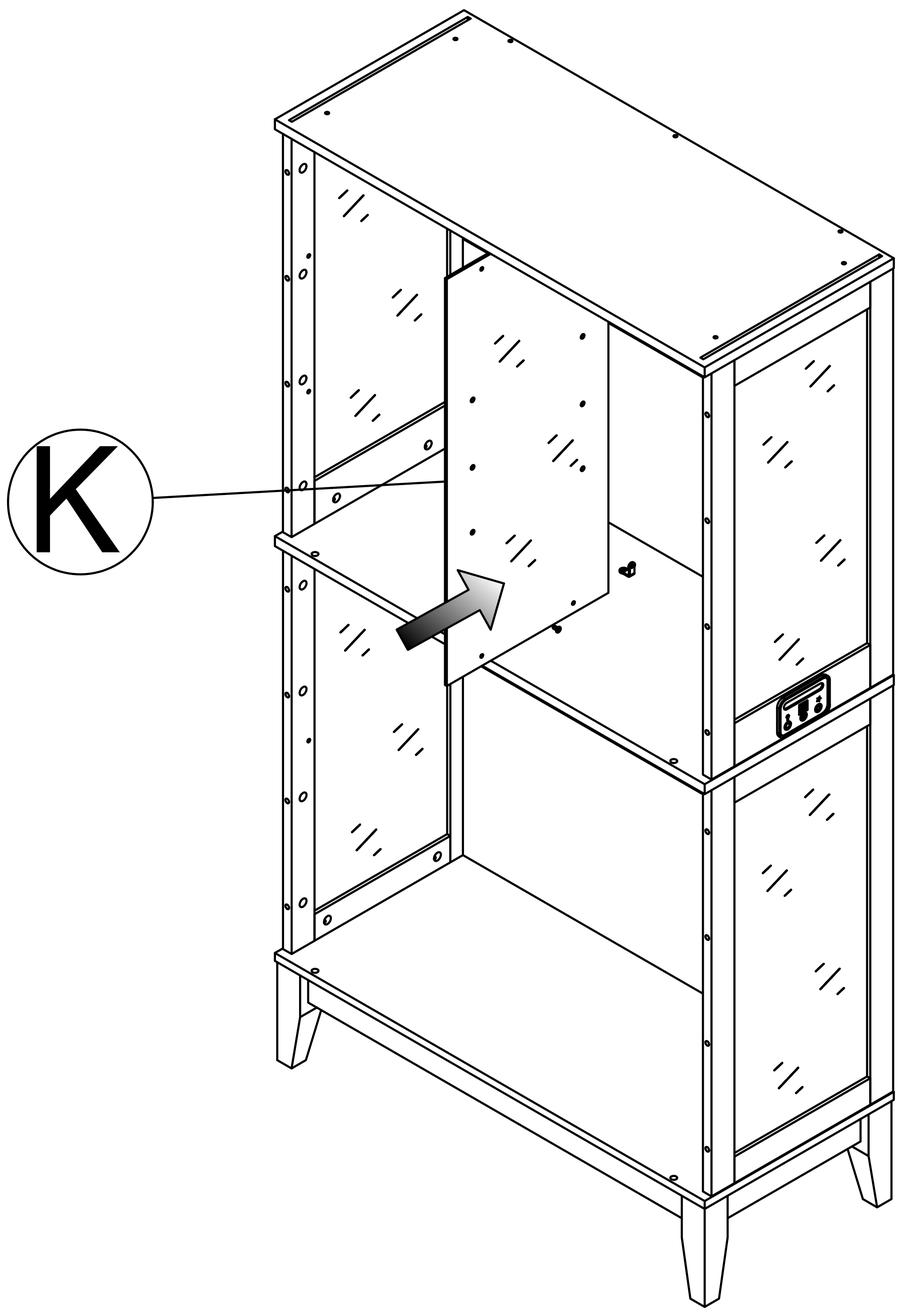

Two persons are required to assist in installing the "K" glass.

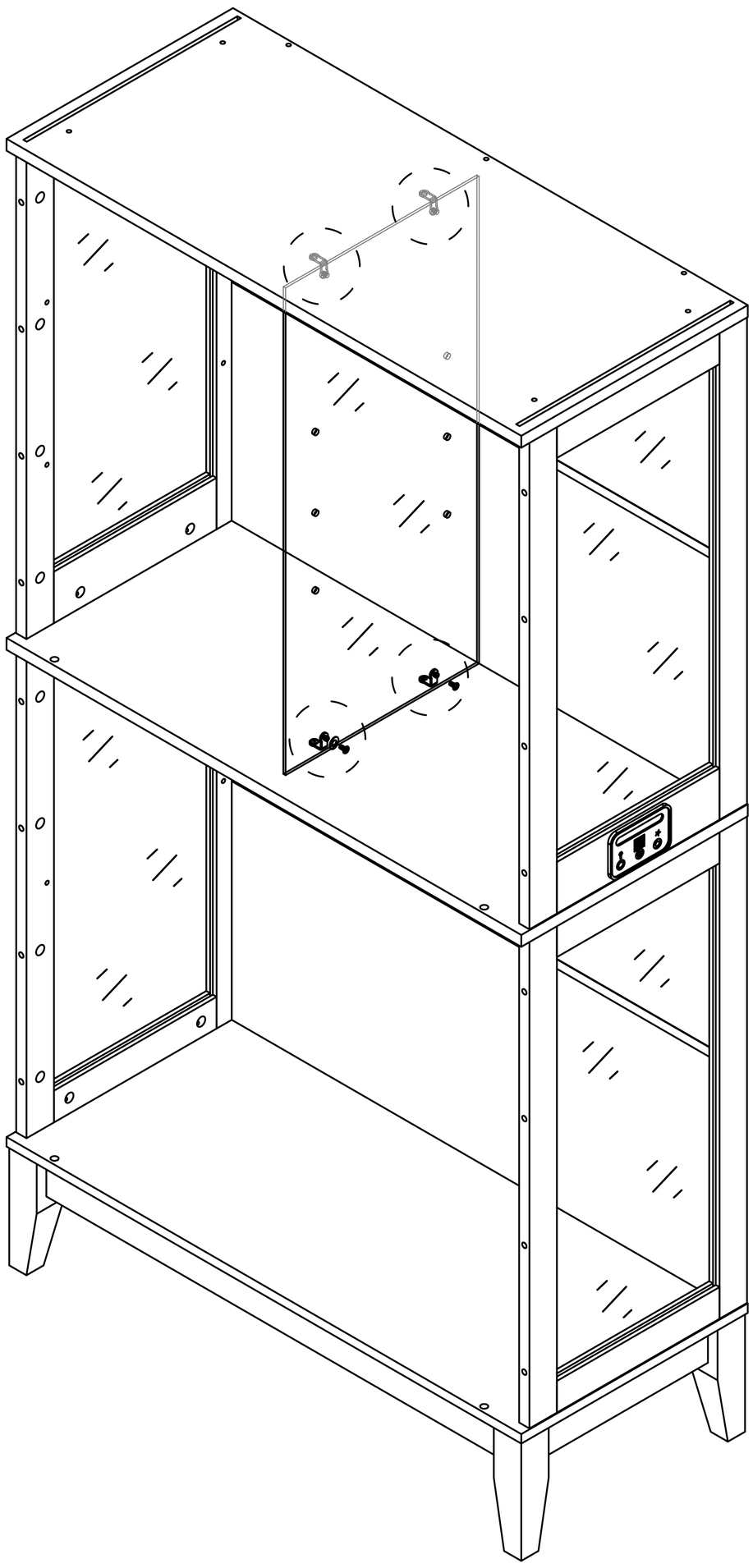

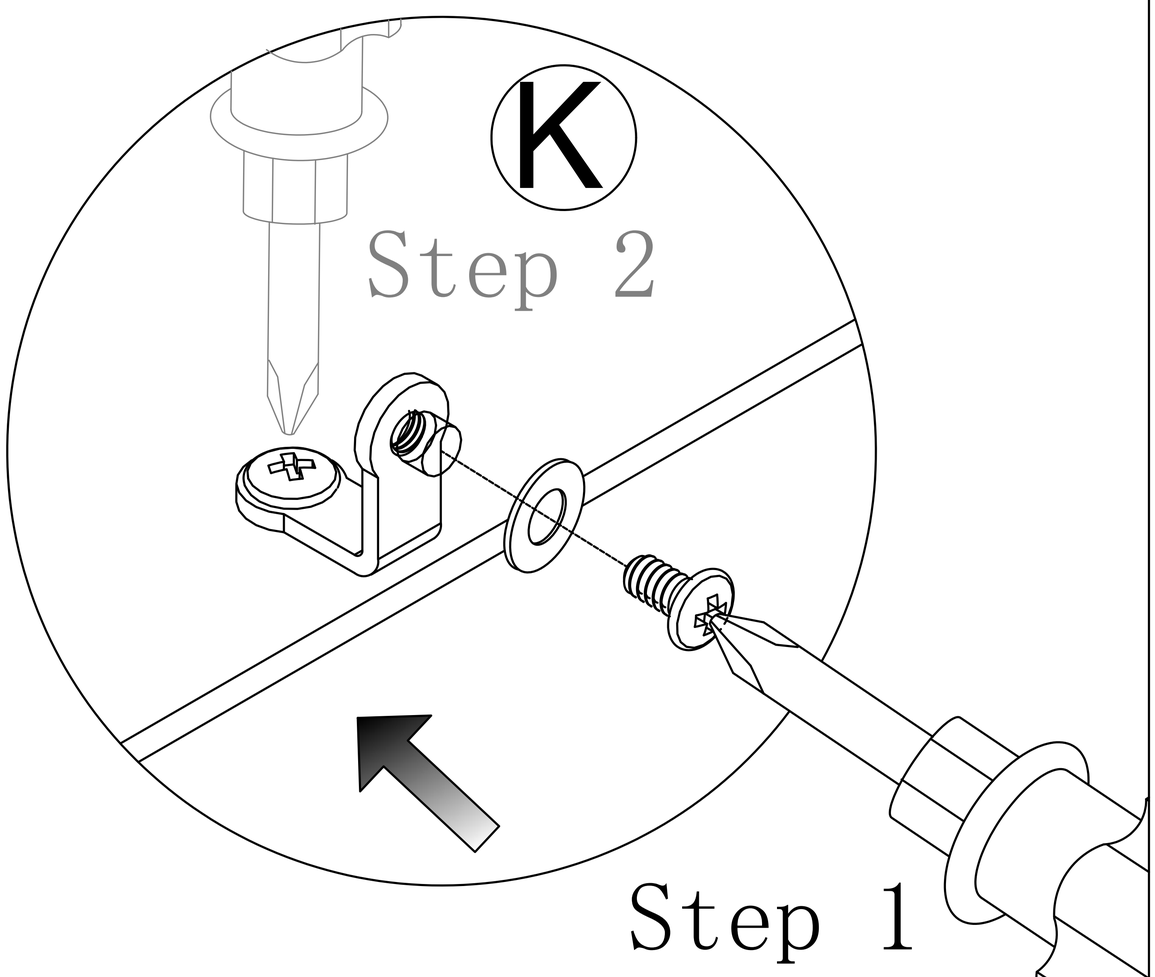

Tighten all screws.

Step 27

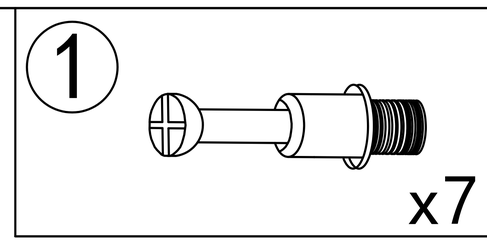

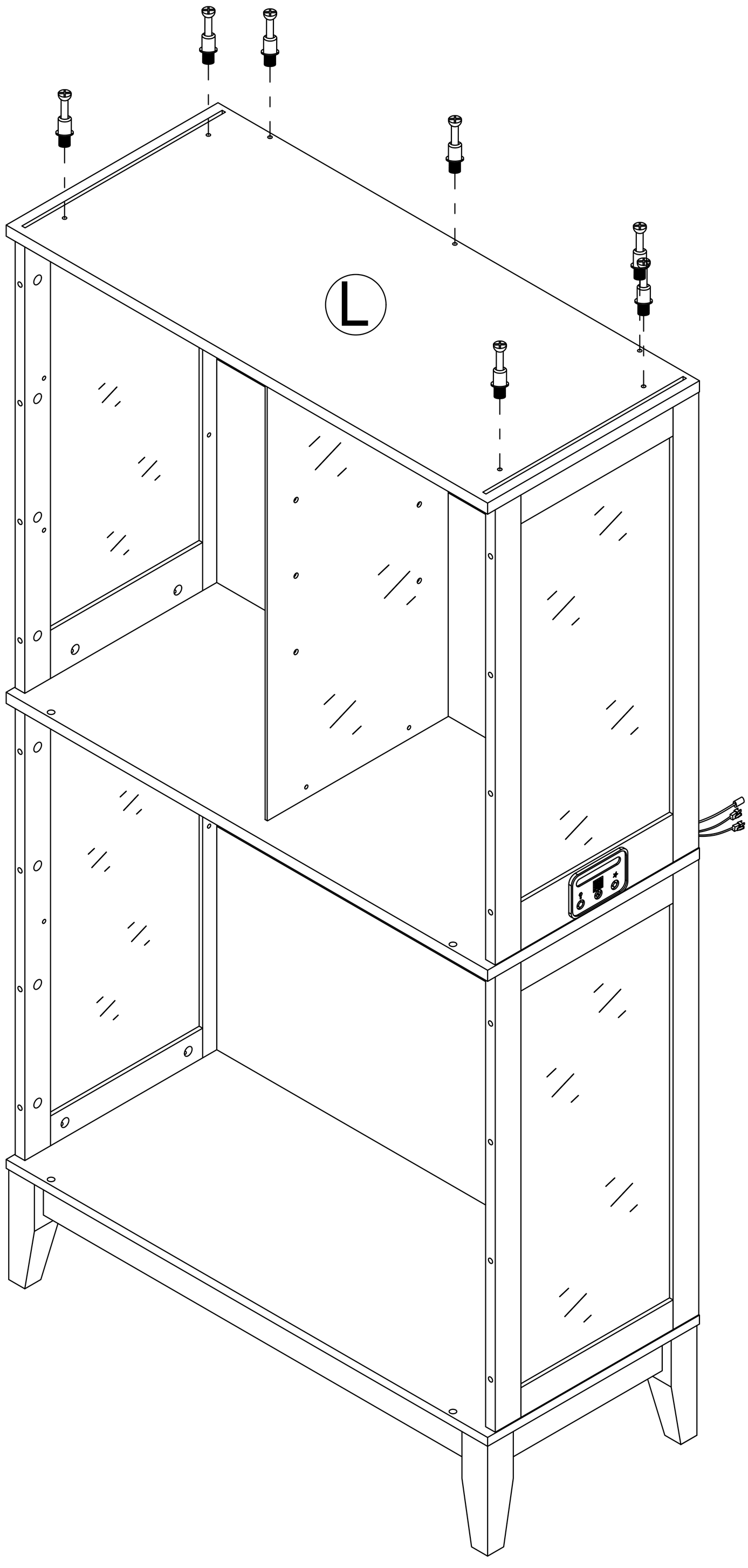

Step 28

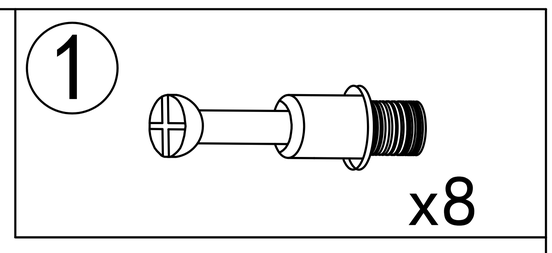

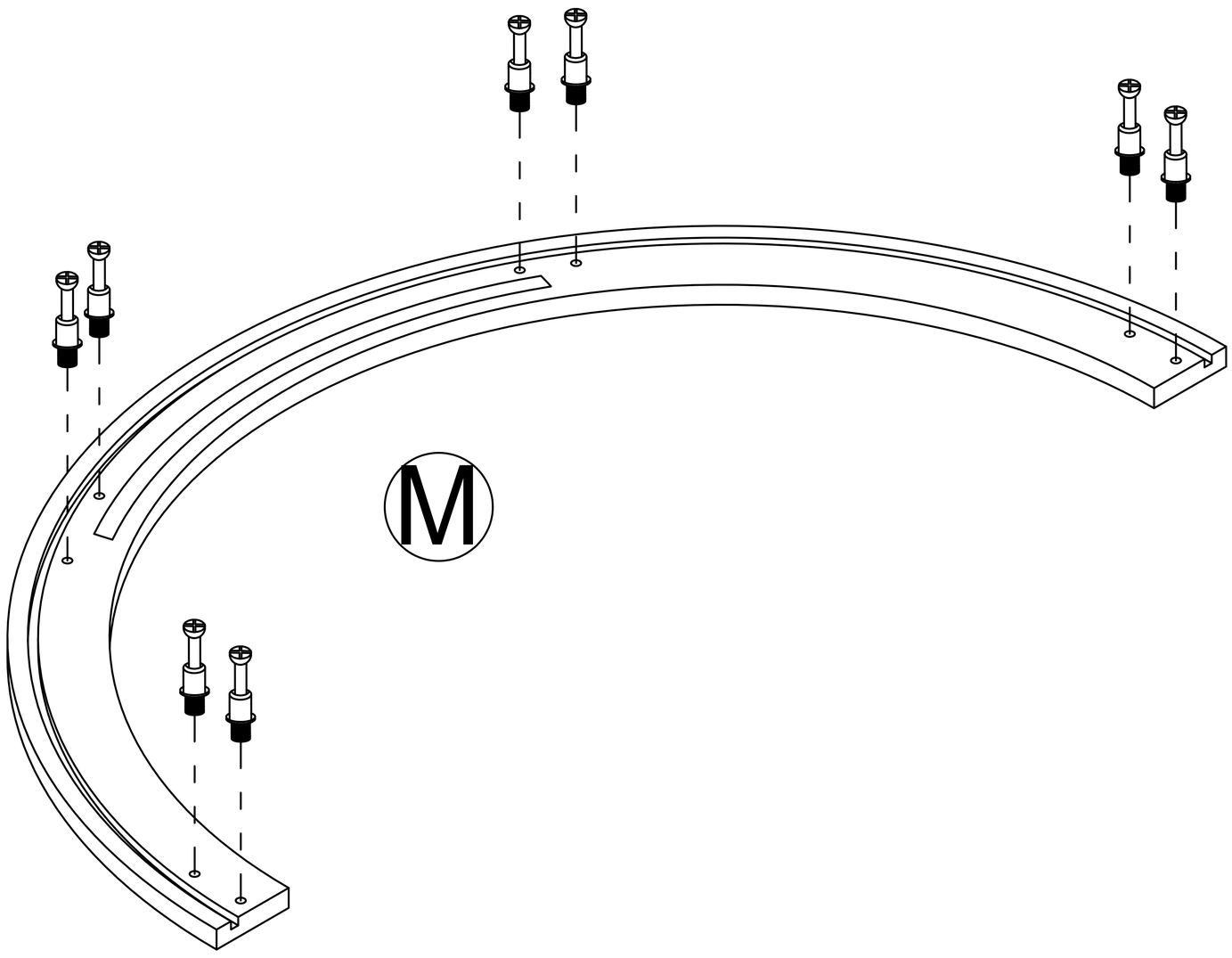

Step 29

Connect the light cable socket

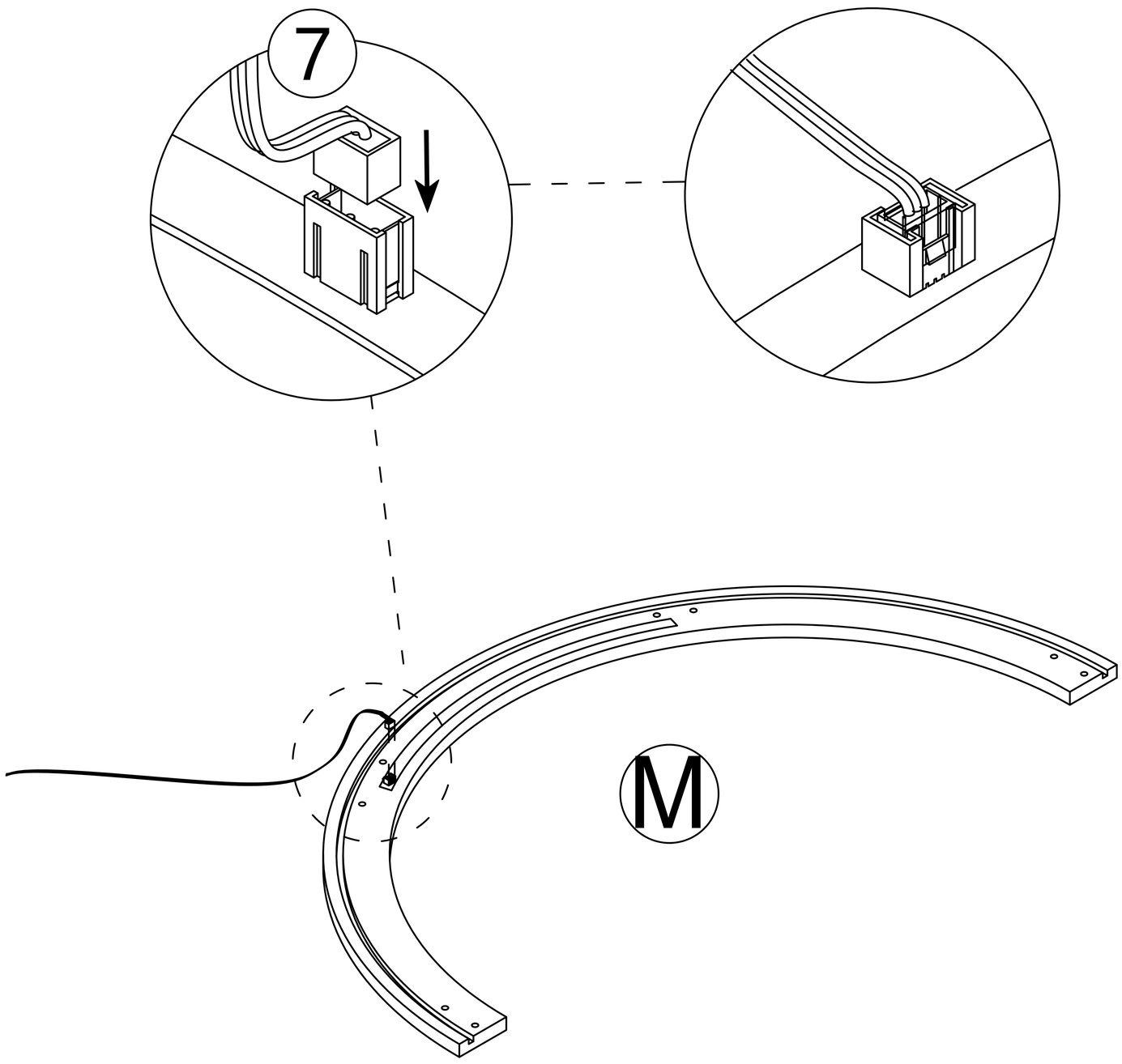

Step 30

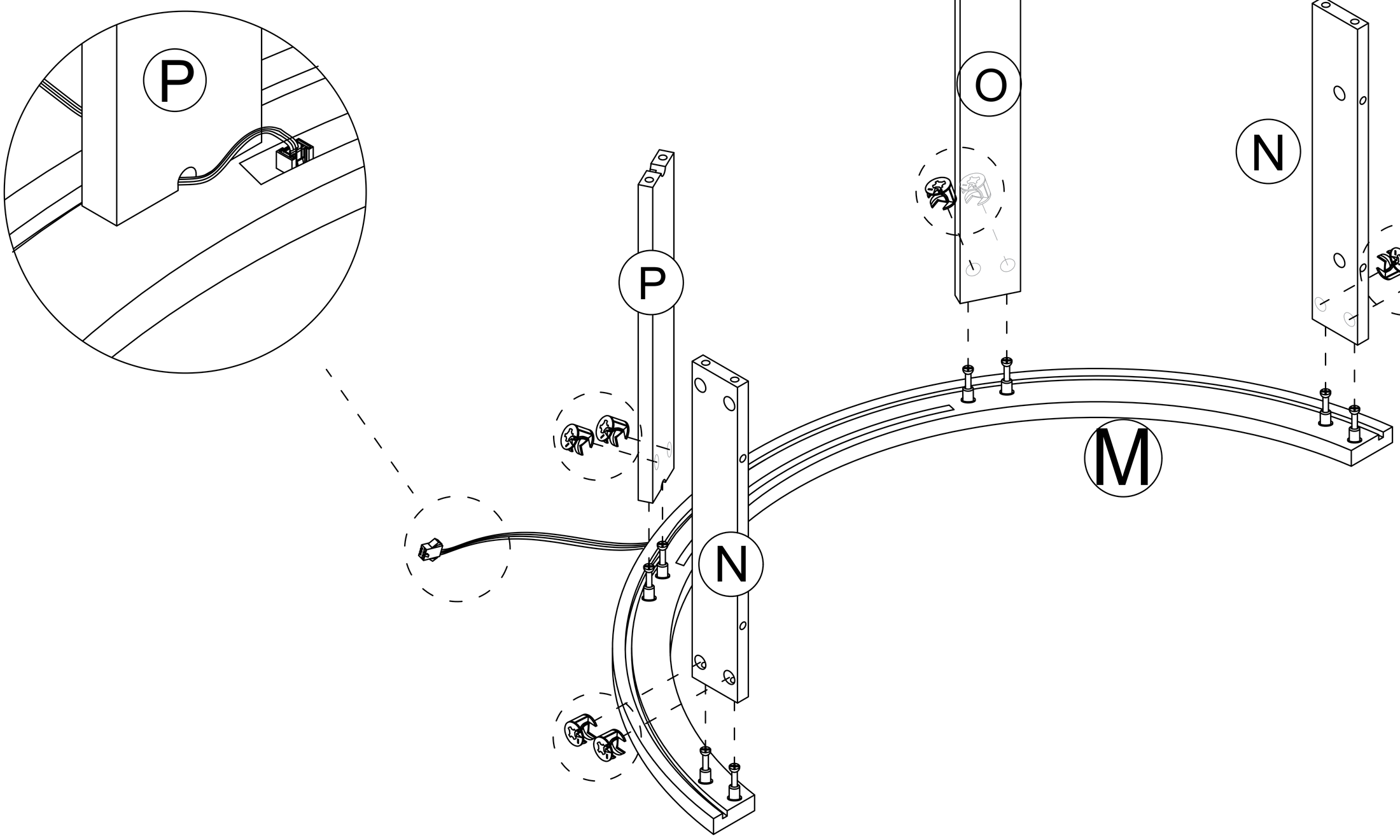

Thread the light wire through board P and tighten the nut

Step 31

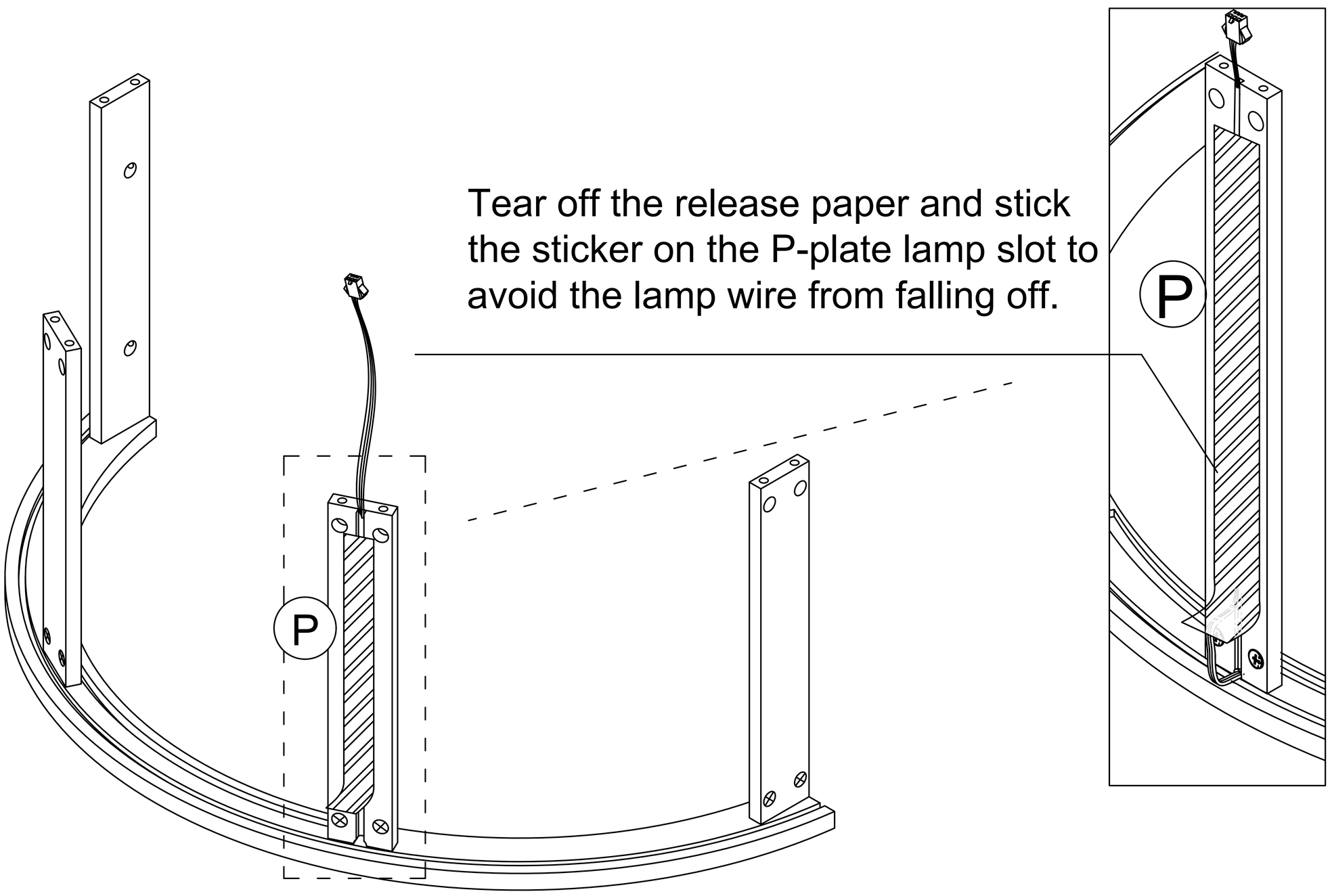

Tear off the release paper and stick the sticker on the P-plate lamp slot to avoid the lamp wire from falling off.

Step 32

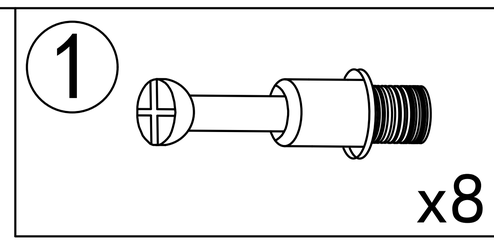

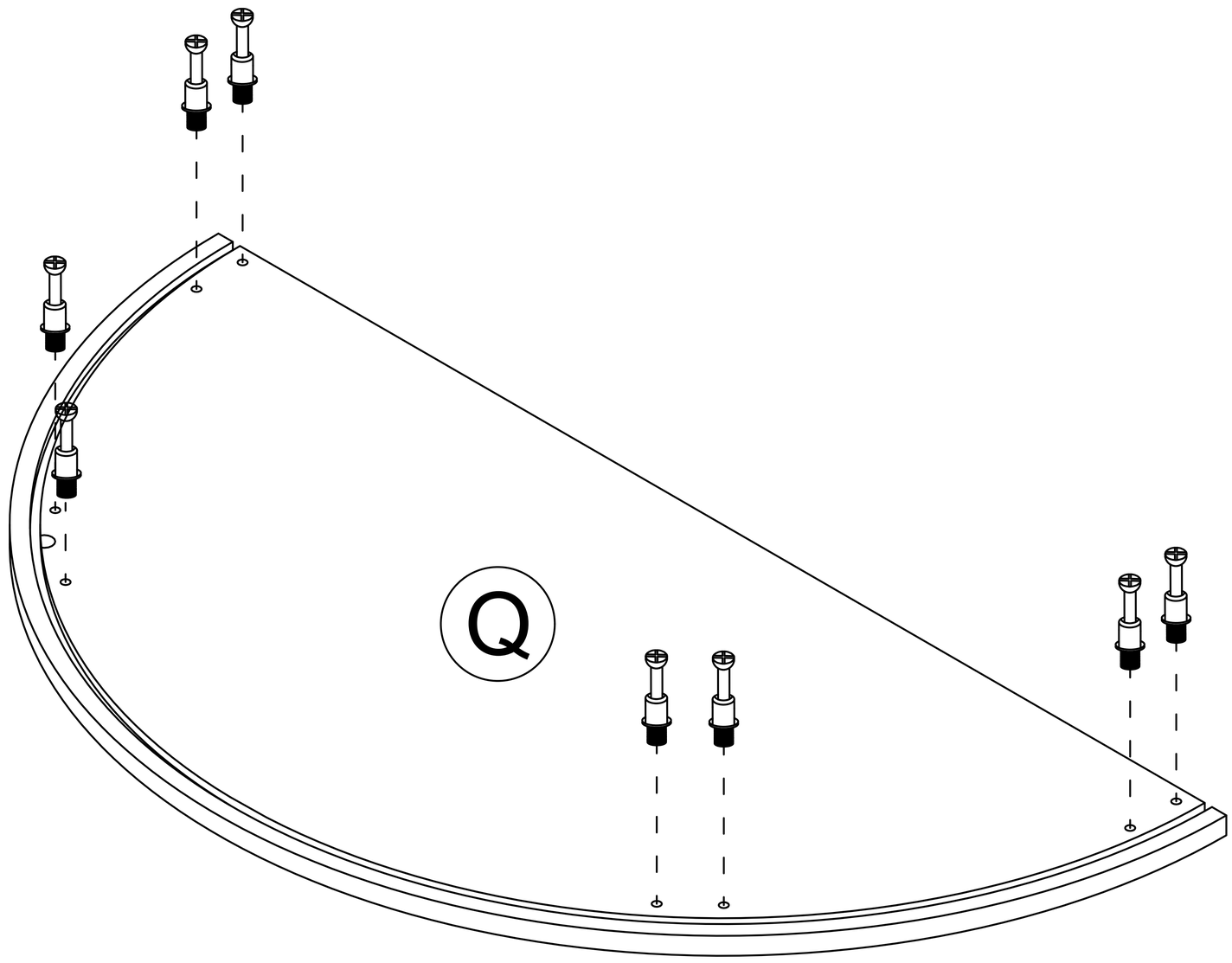

Step 33

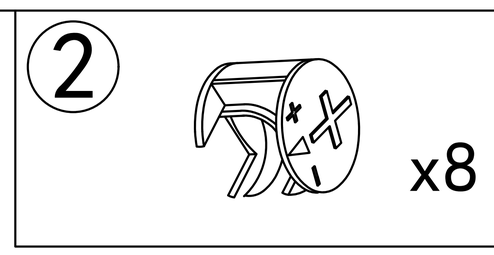

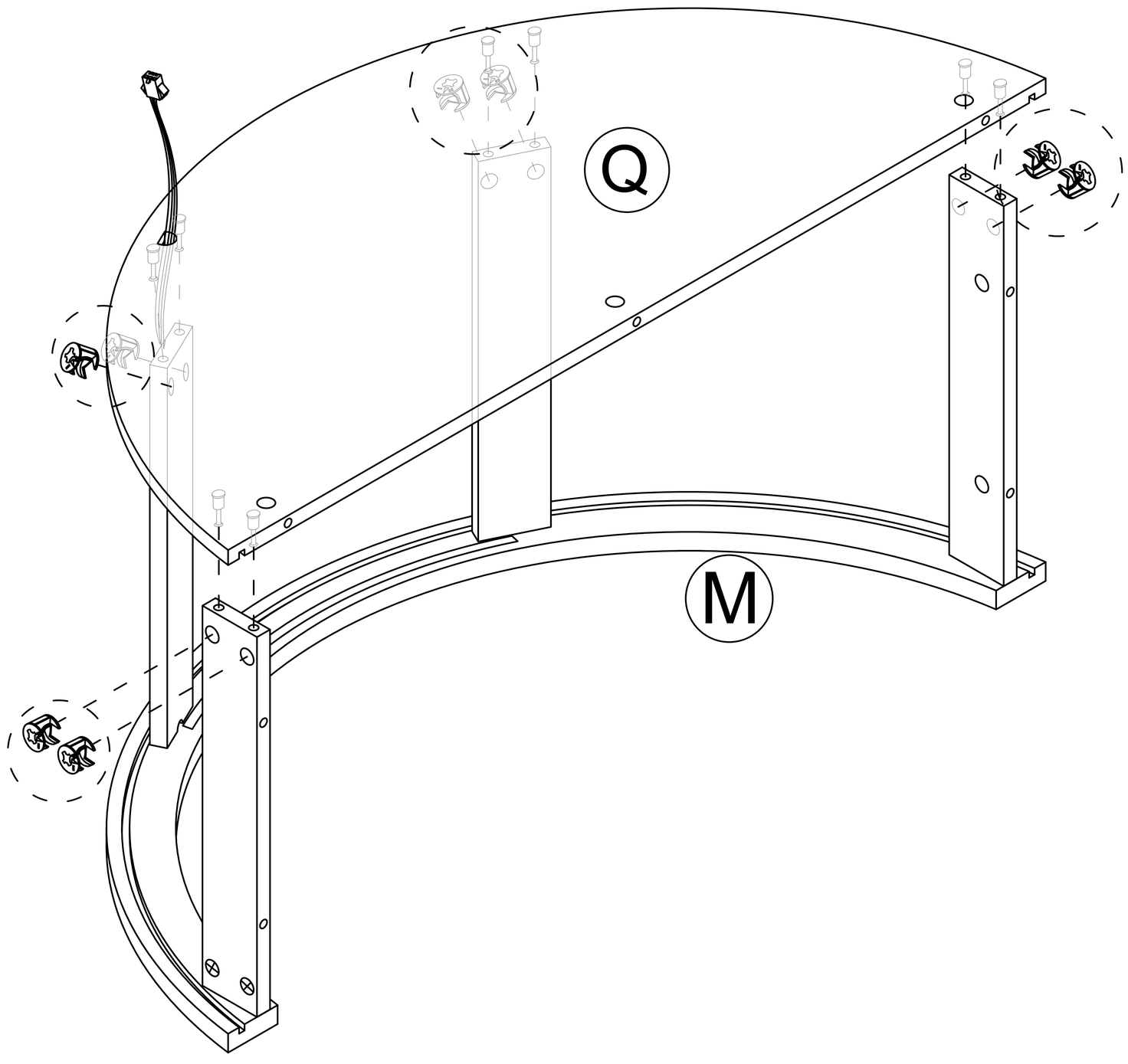

Step 34

Note: When installing the R plate, push the middle of the R plate by hand to push the R plate into the groove.

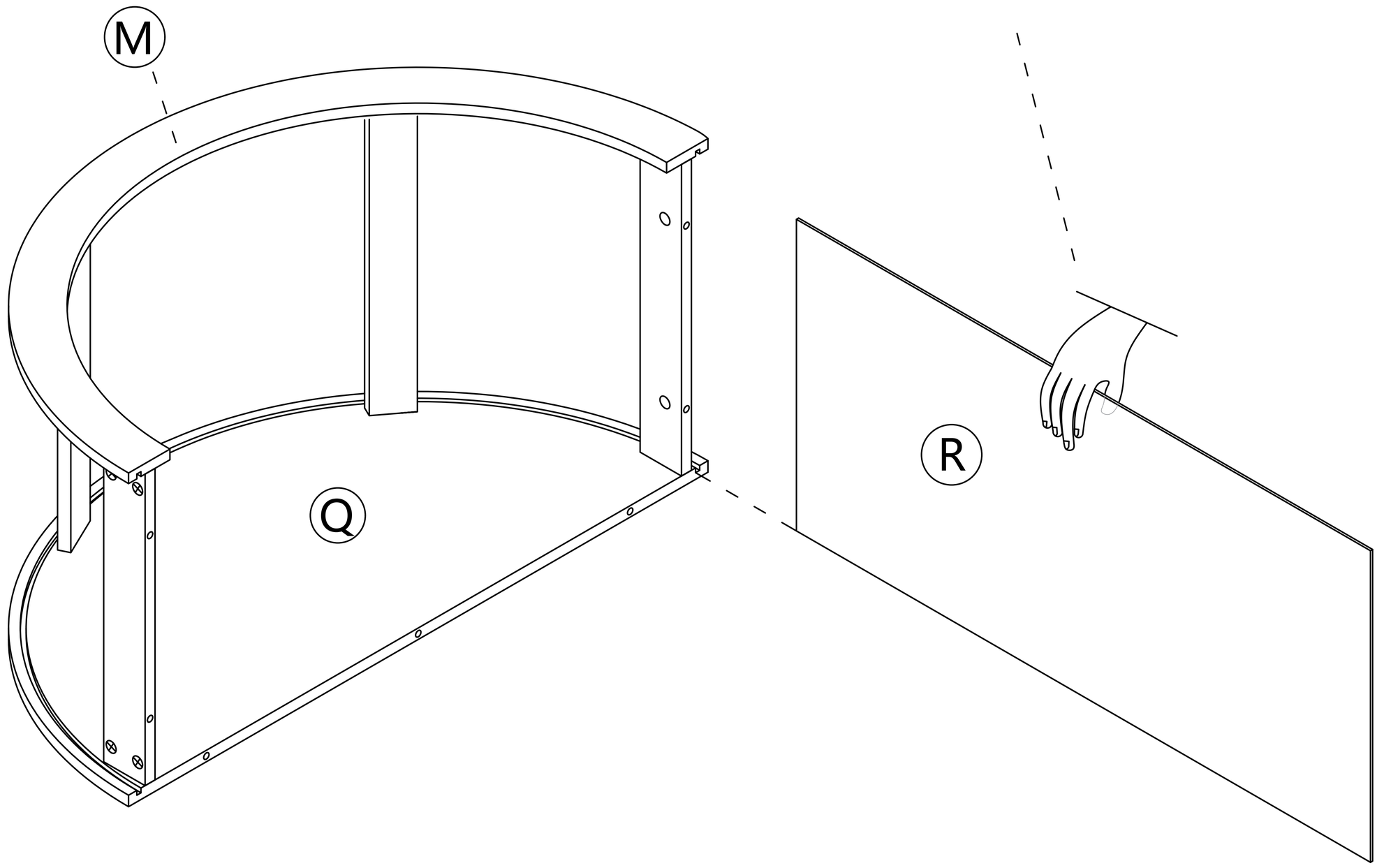

According to the circular groove, insert R into M and Q grooves.

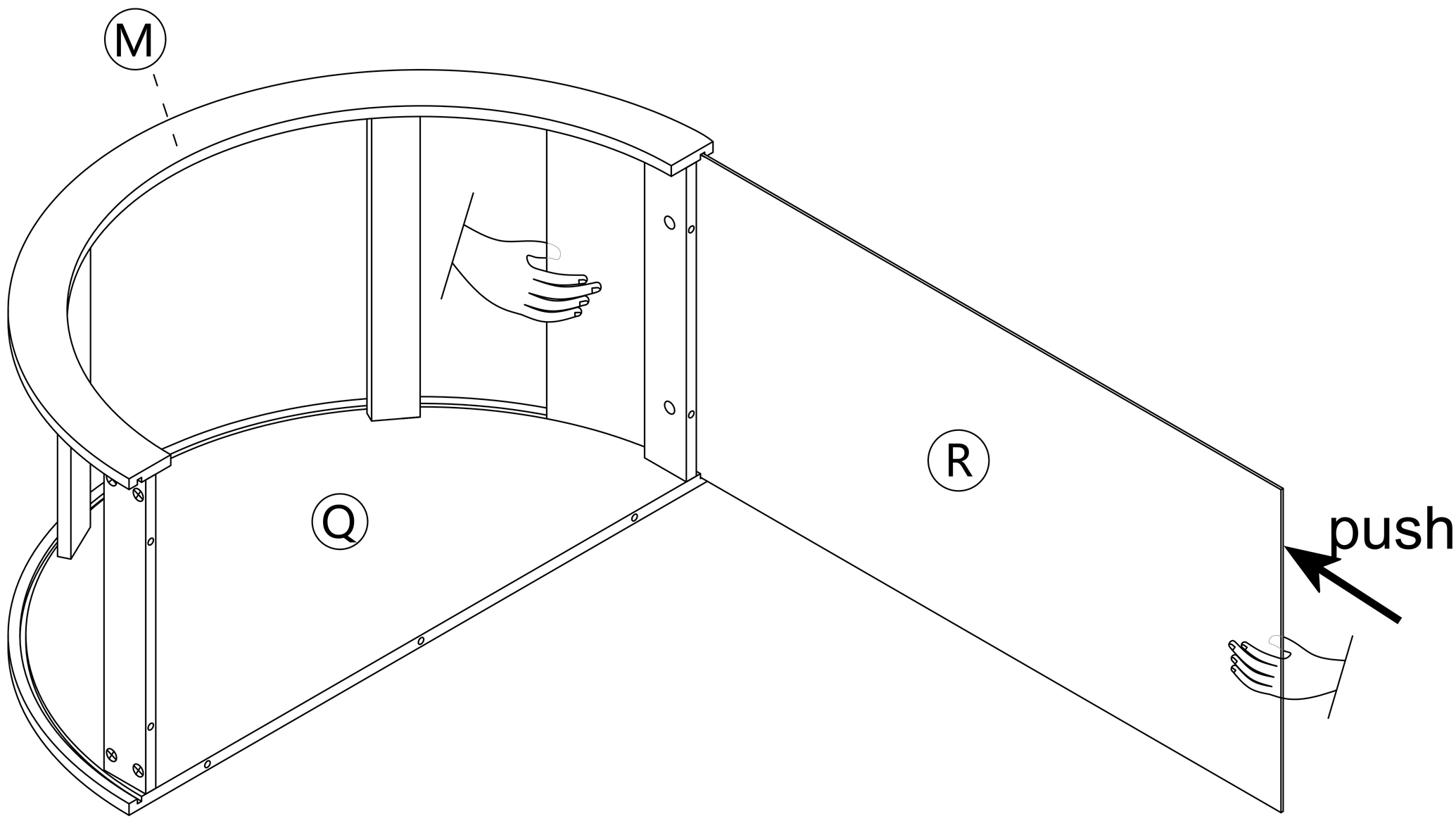

If it is difficult to push the R plate in, you can use the pull method.

Step 35

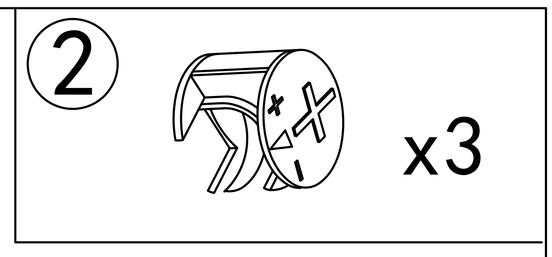

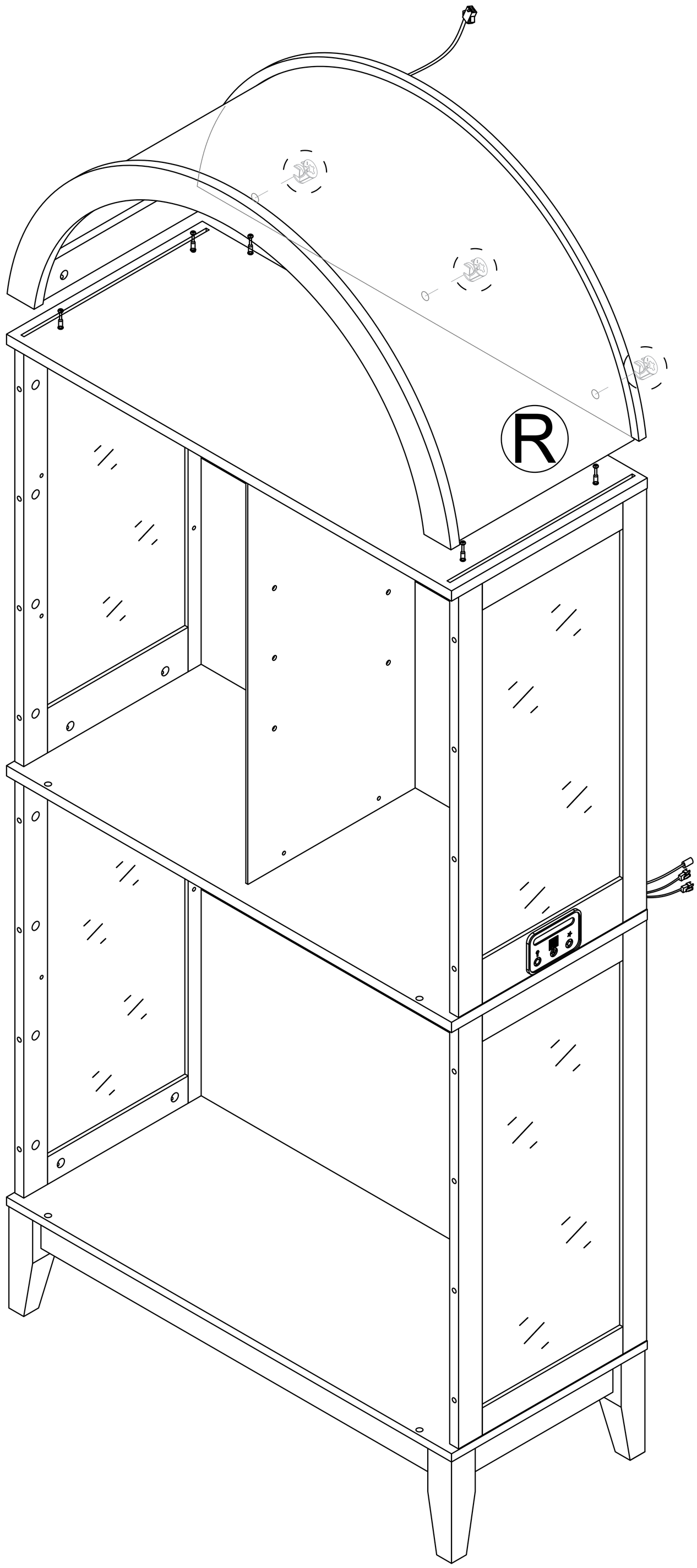

Step 36

②	x4
⑩	x4

Note: After installing the R board, you need to pat the backboards on both sides into the grooves of the L board by hand.

Note: pat the R plate on the left and then screw the nut, then pat the R plate on the right and screw the nut.

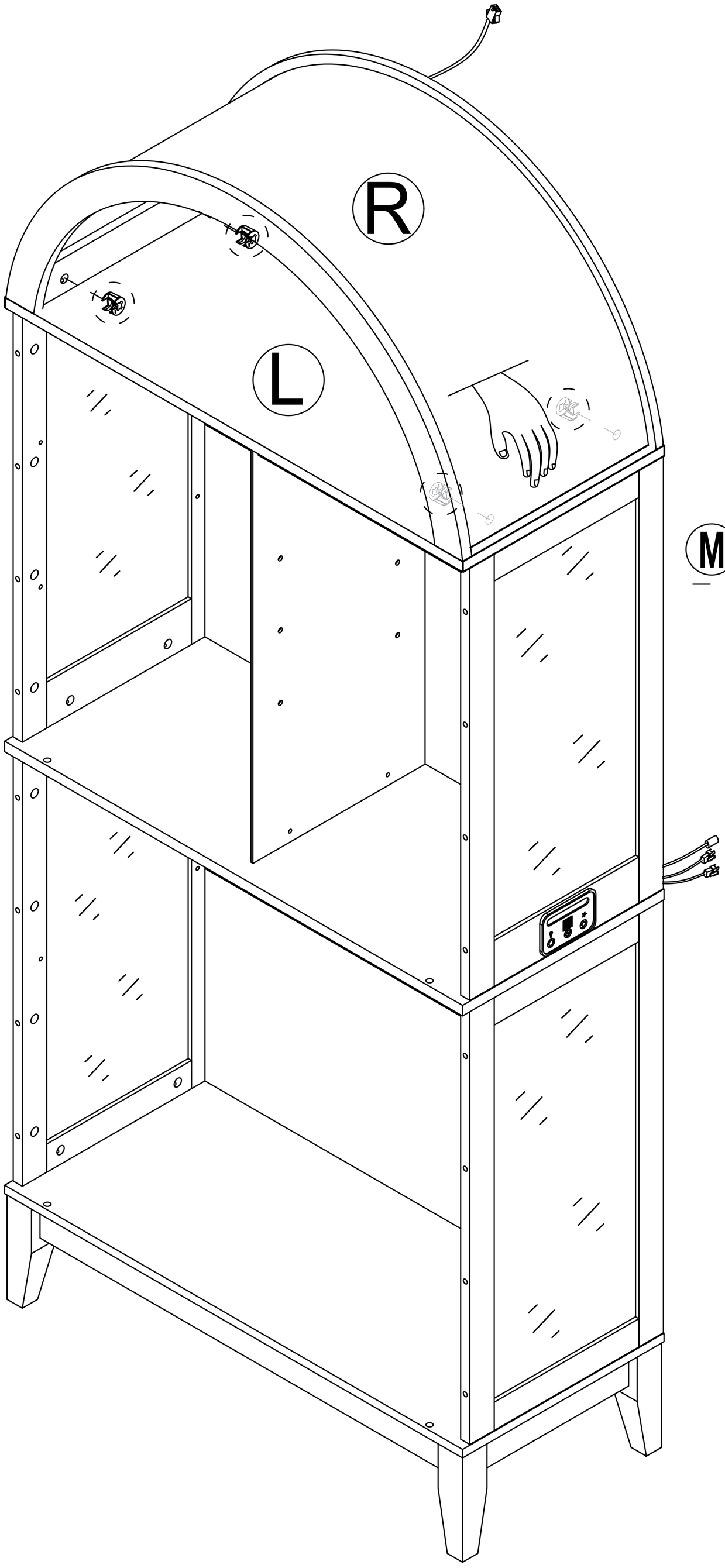

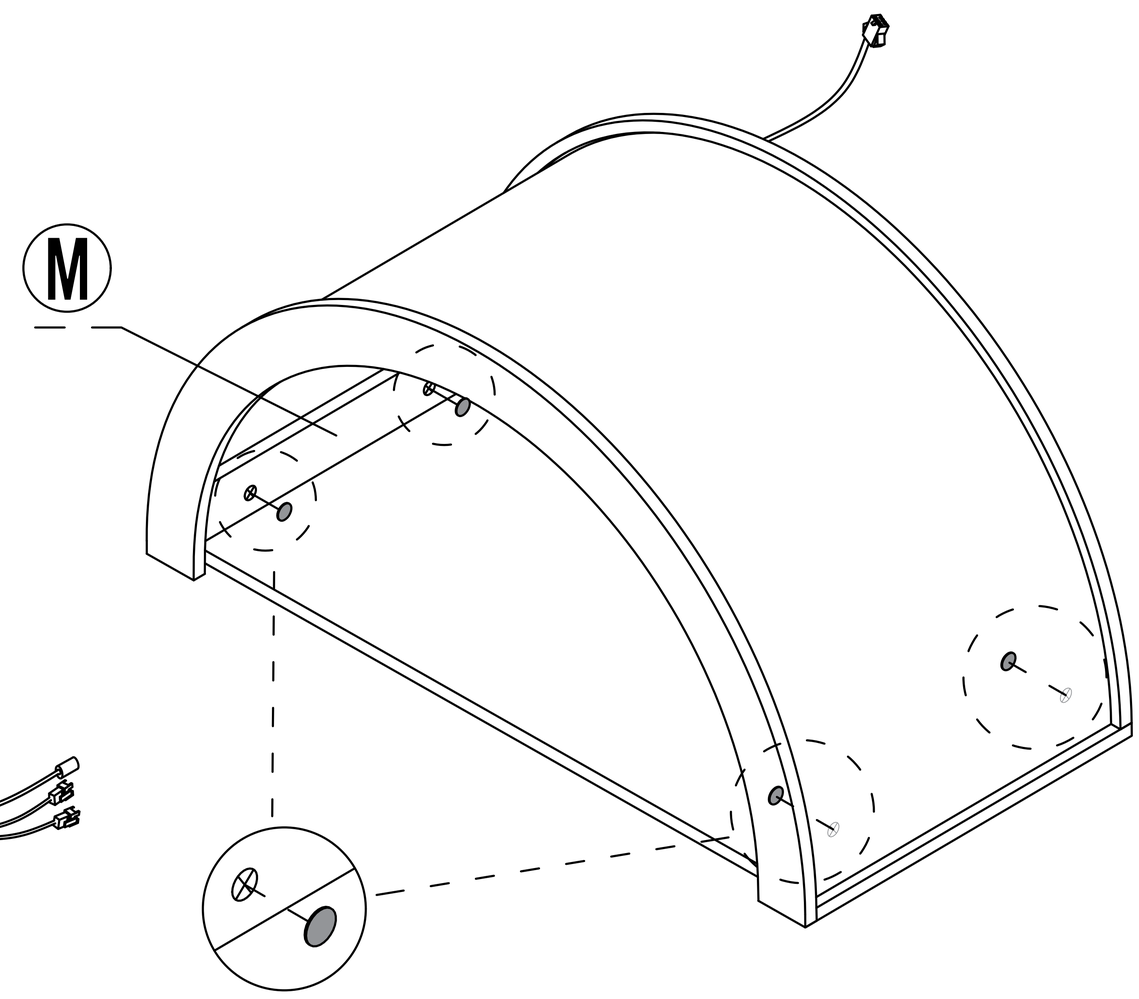

Tear off the protective film before installation

Step 37

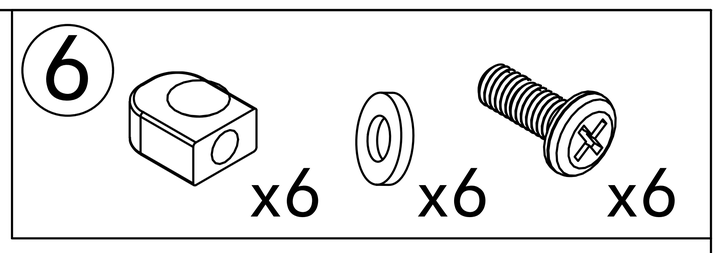

Pay Attention to Mounting Direction

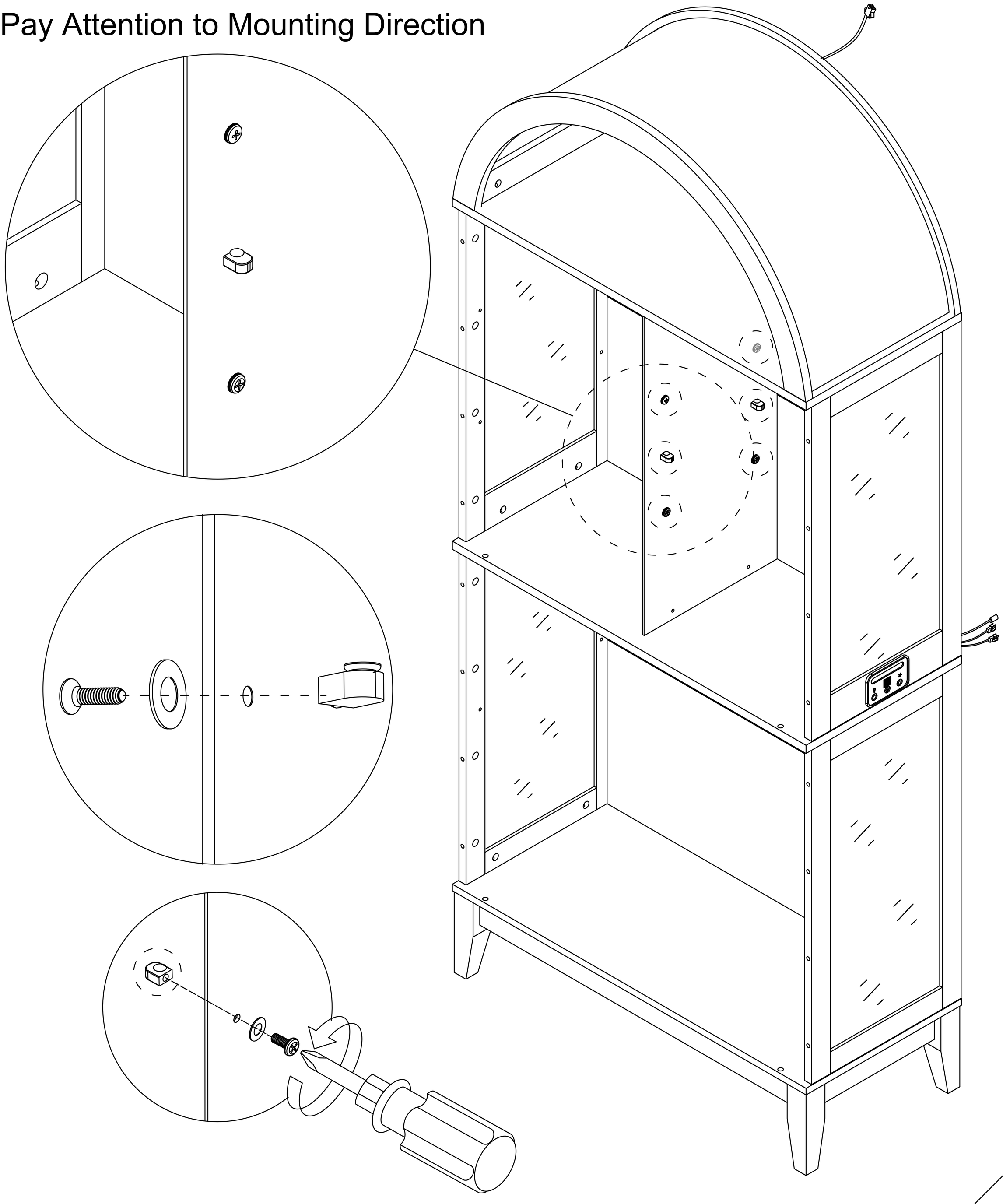

Step 38

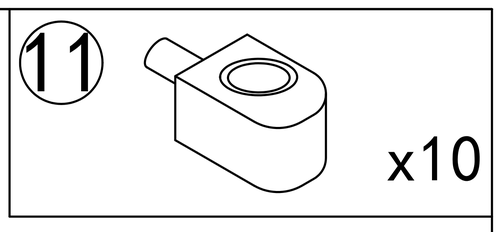

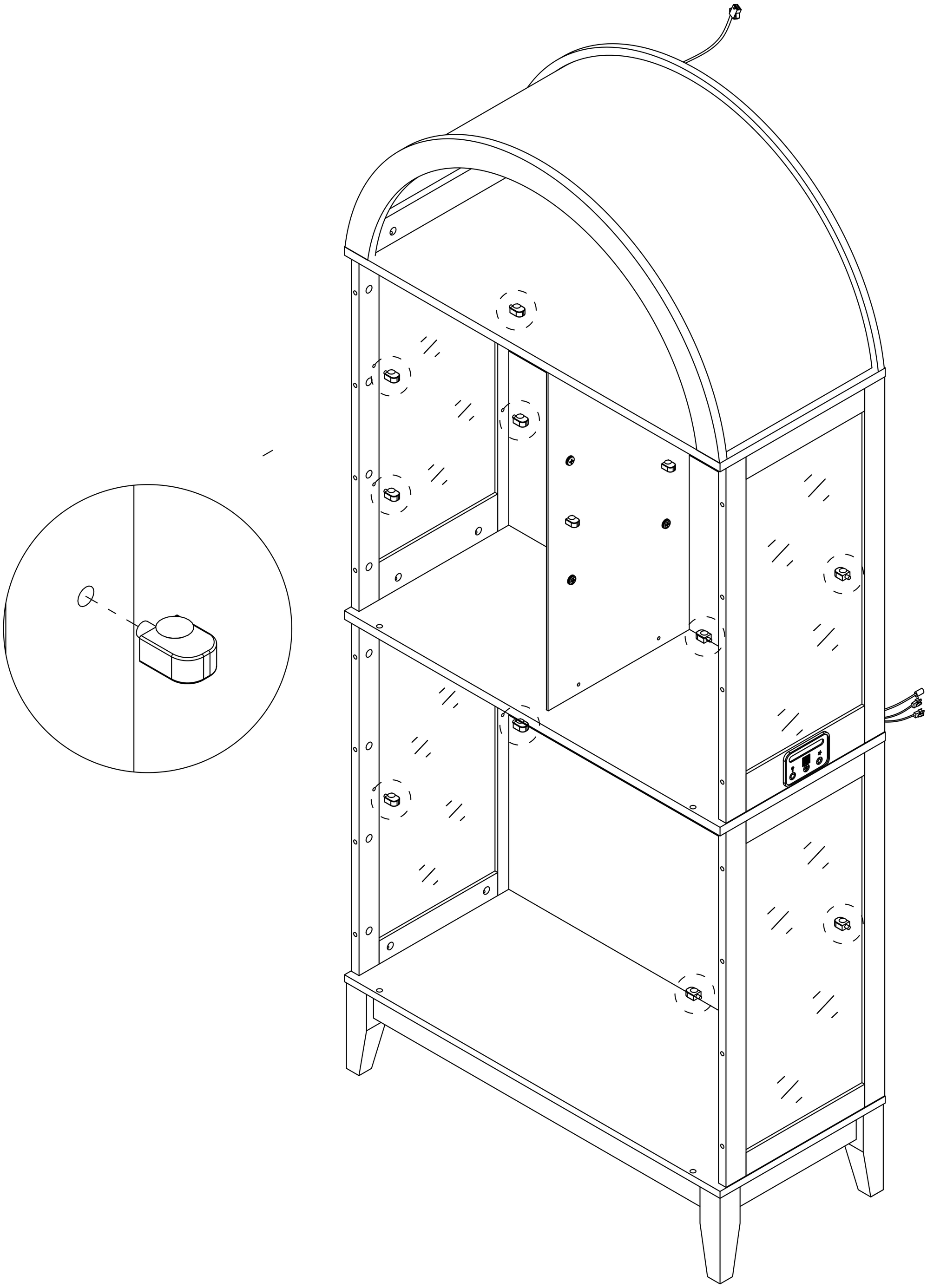

Step 39

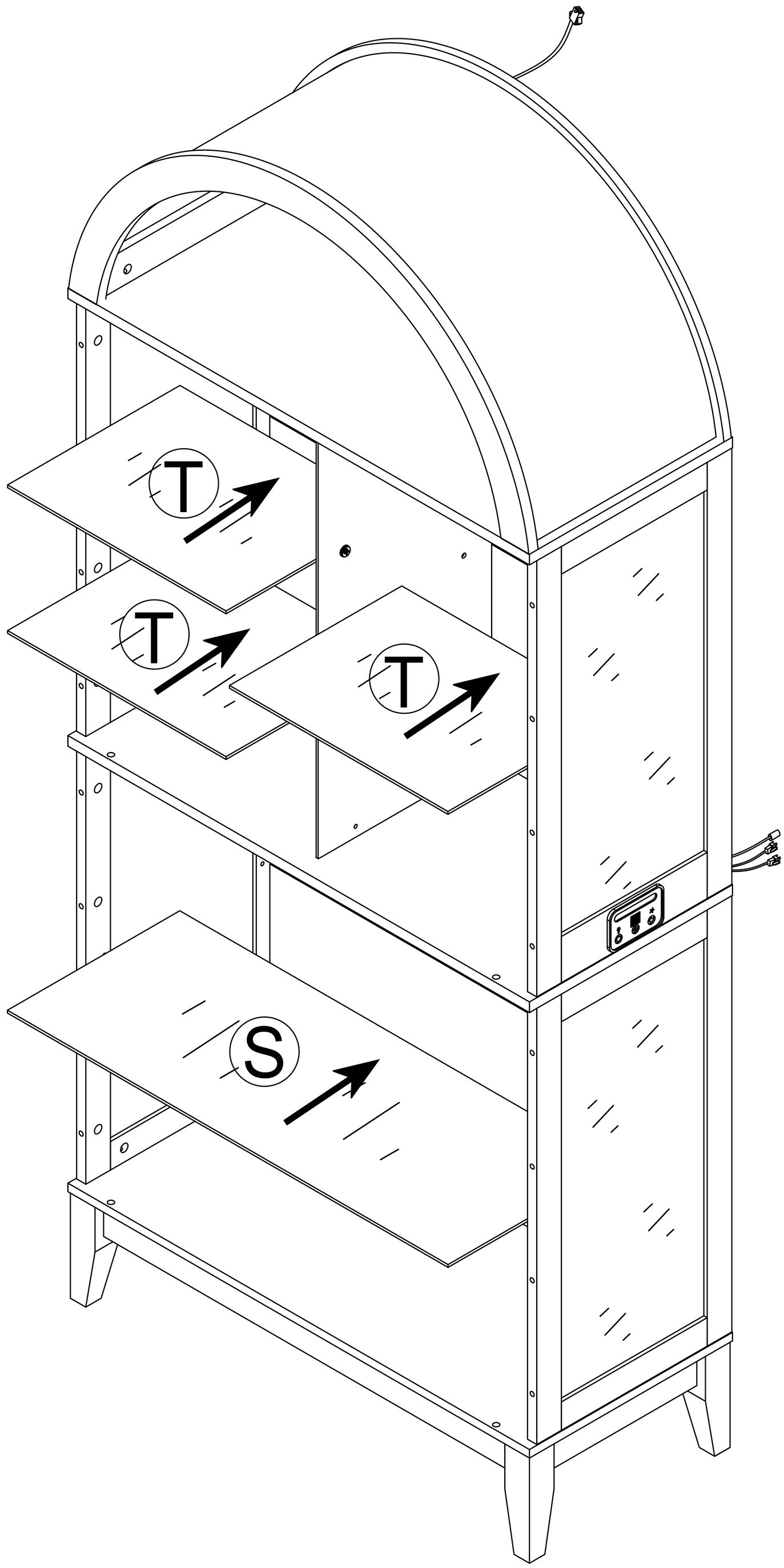

Step 40

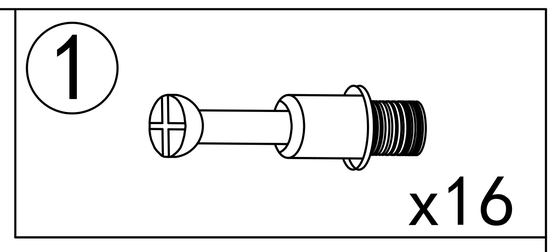

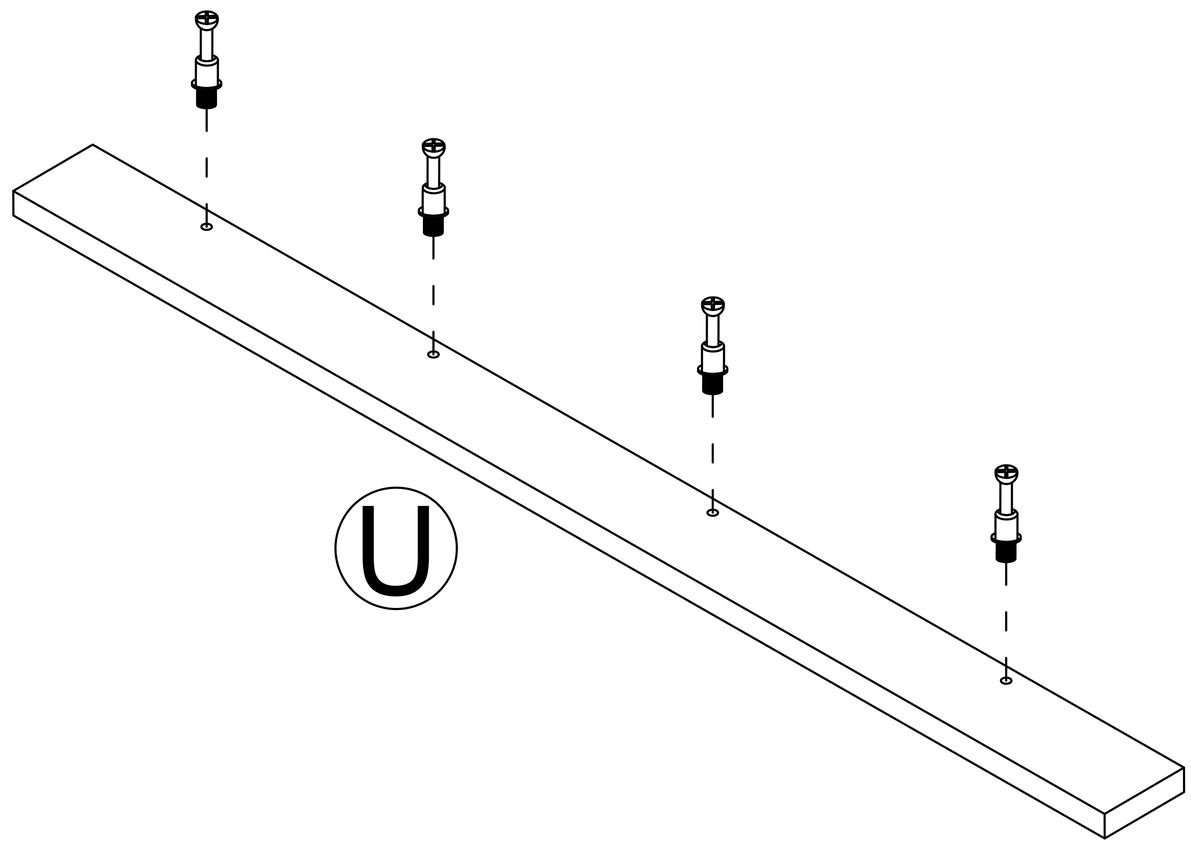

Steps and objects x4

Step 41

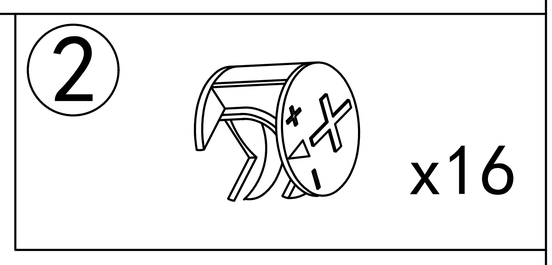

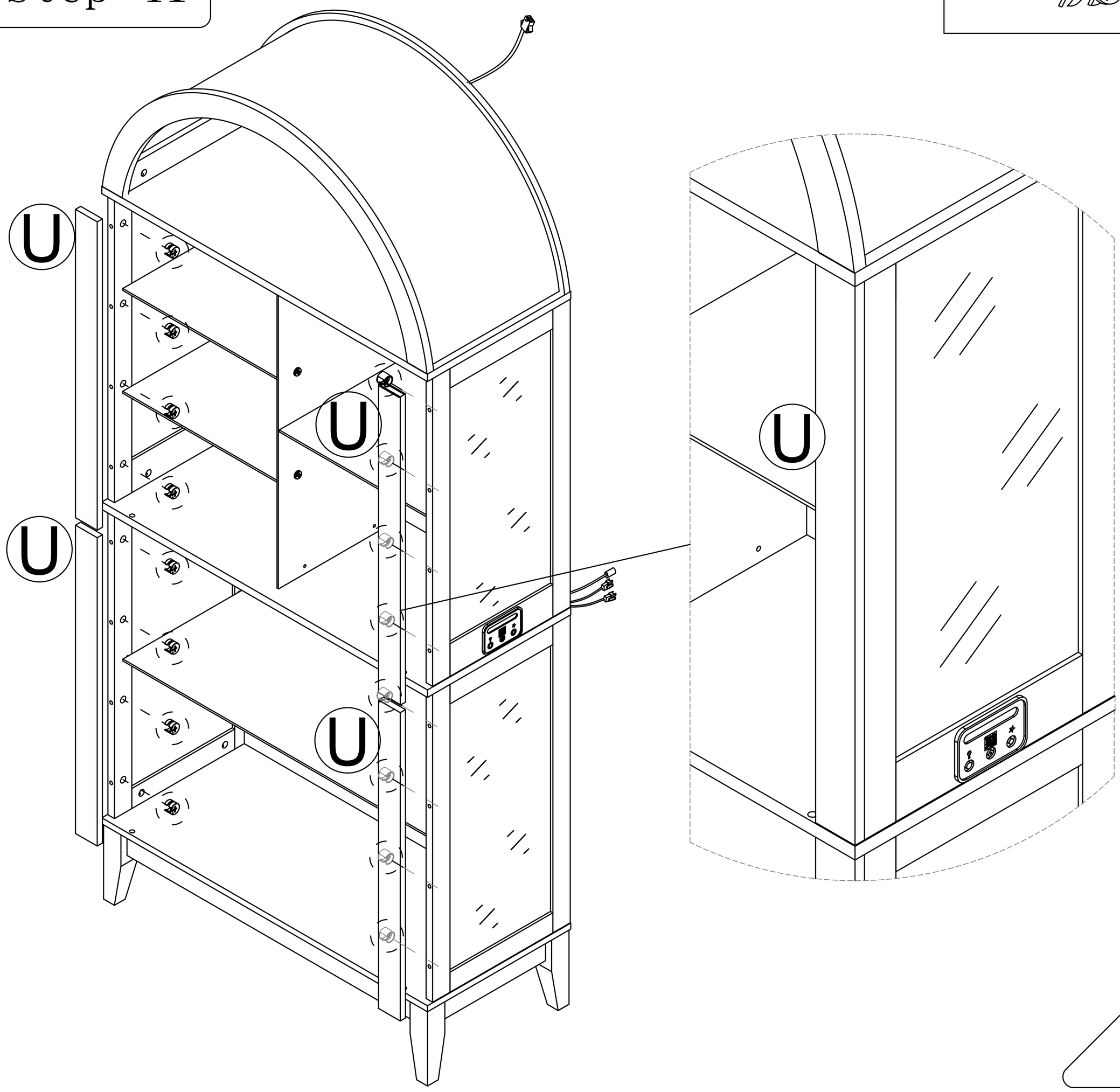

Step 42

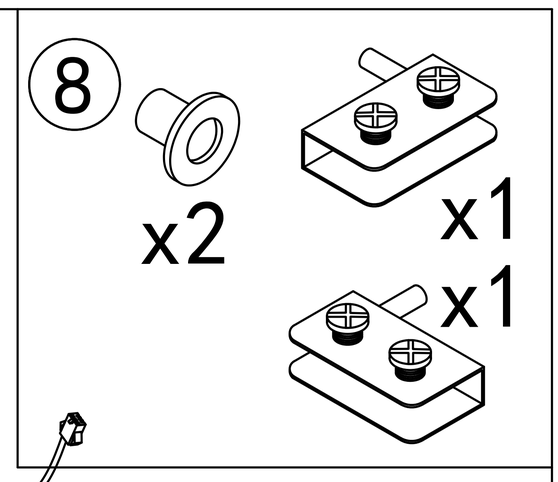

First, loosen the screws.

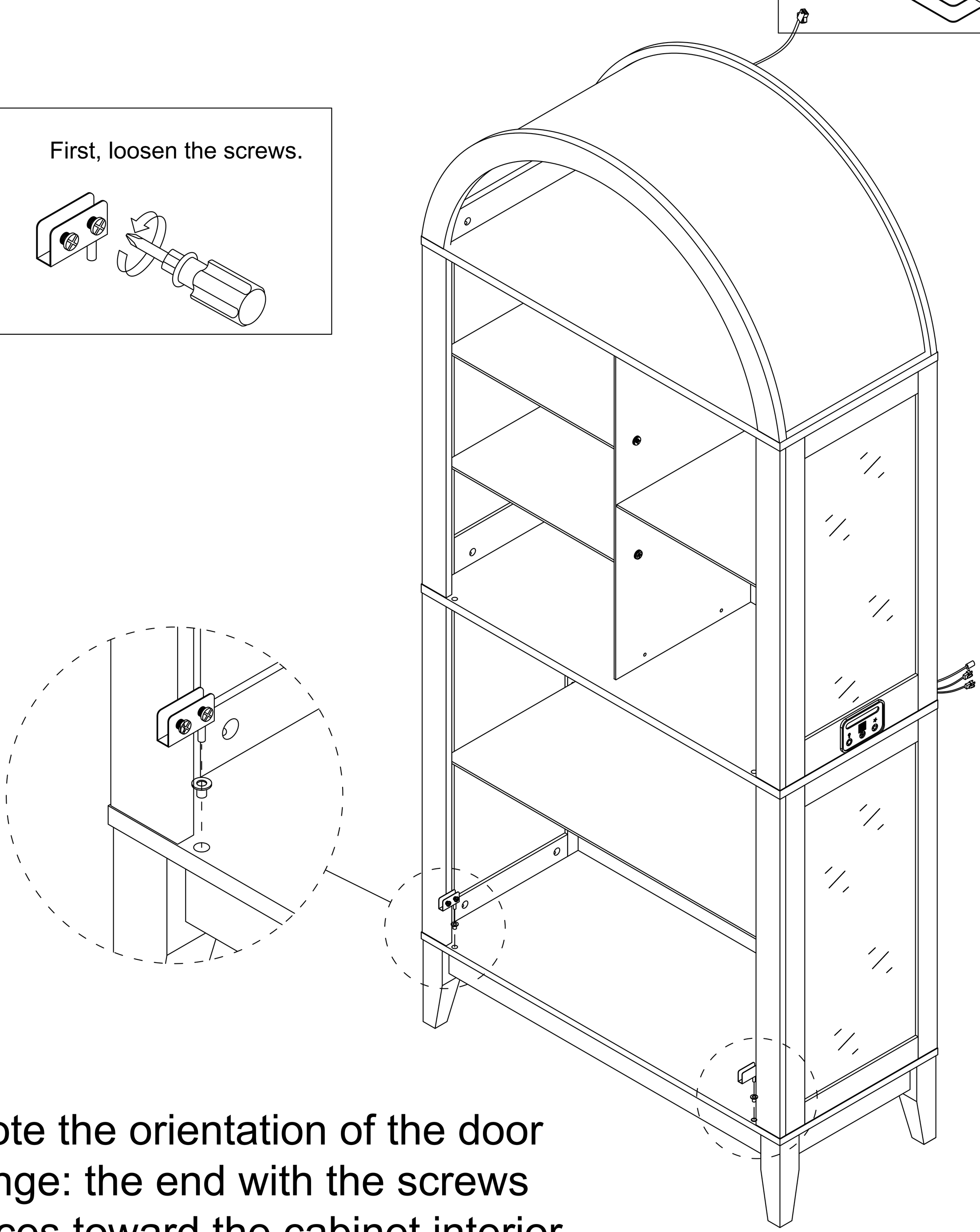

Note the orientation of the door hinge: the end with the screws faces toward the cabinet interior.

Step 43

First, loosen the screws.

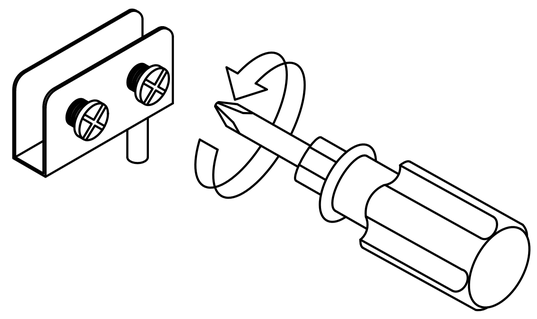

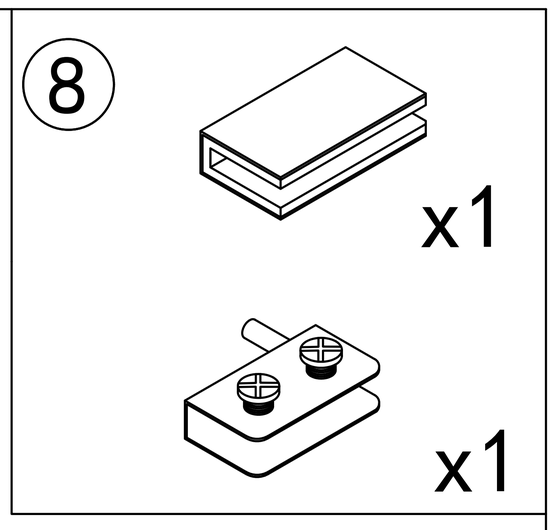

1. Take out the white pad
2. Fit the pad around the edge of the glass panel
3. Then slide the metal clamp over the assembled position
4. Finally, tighten the screws securely

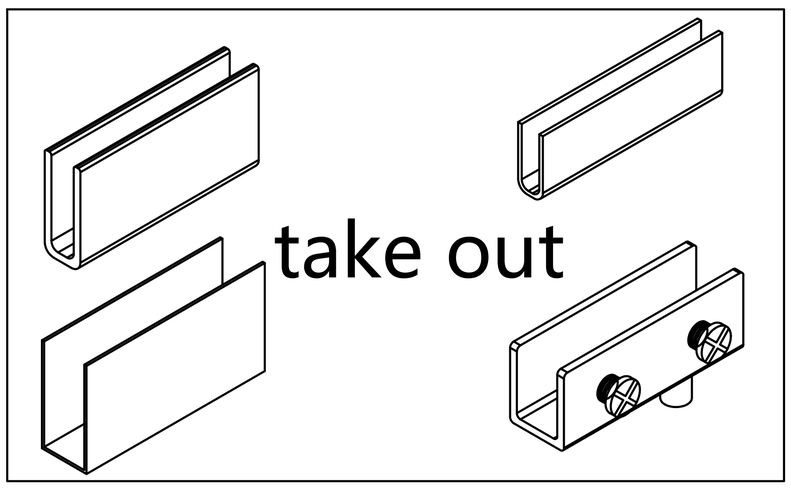

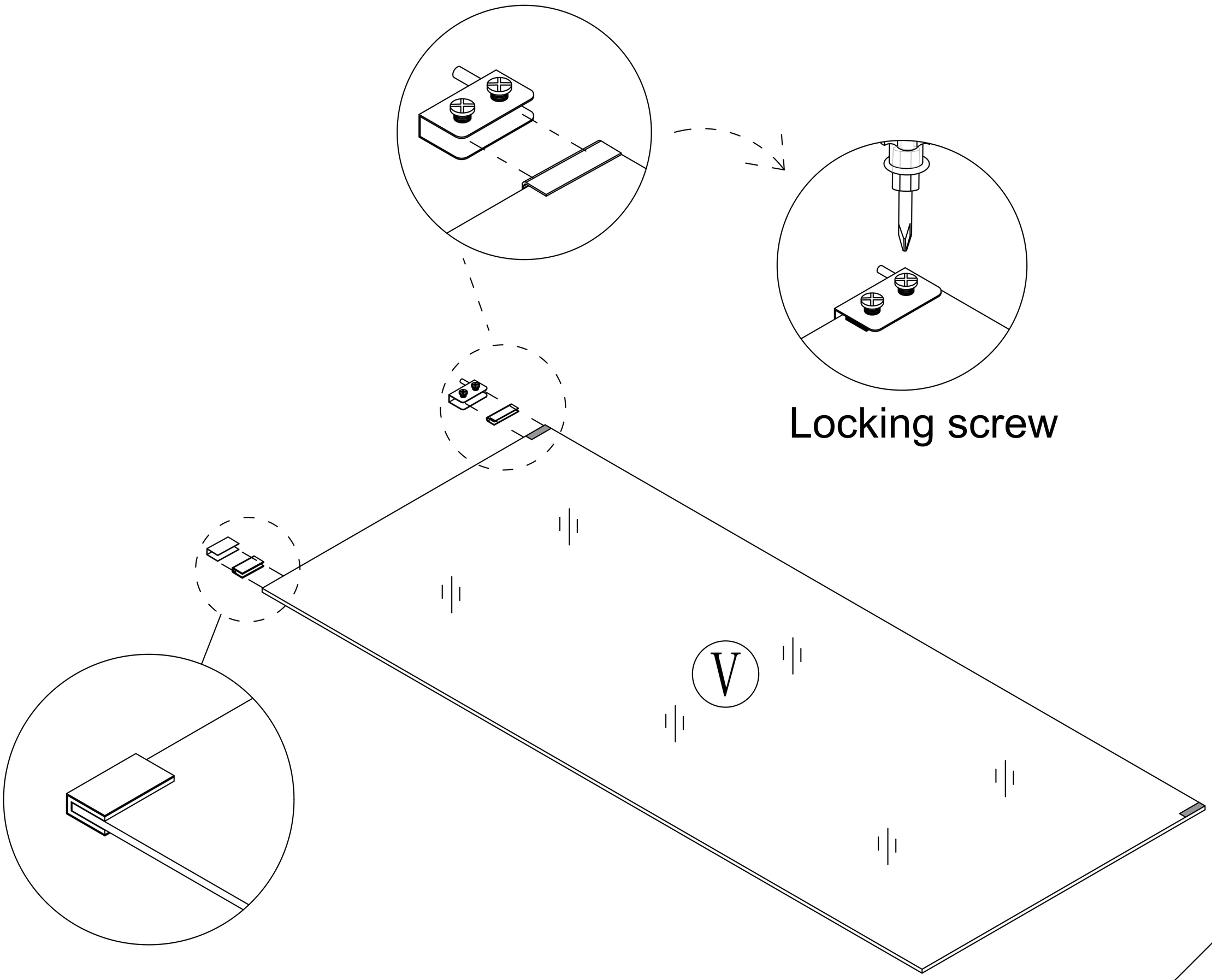

Step 44

First, loosen the screws.

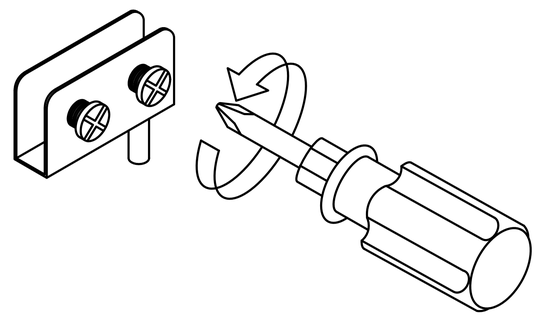

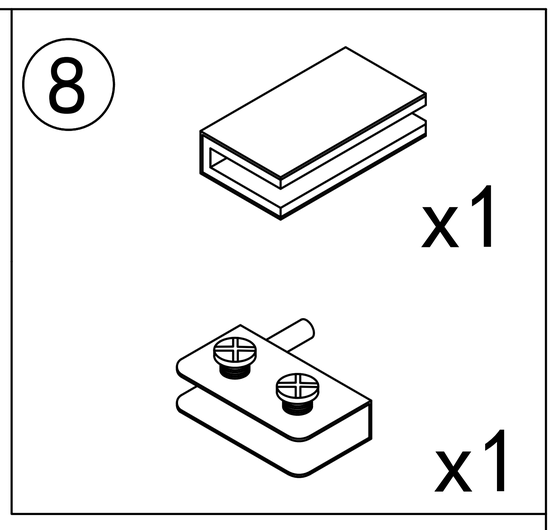

1. Take out the white pad
2. Fit the pad around the edge of the glass panel
3. Then slide the metal clamp over the assembled position
4. Finally, tighten the screws securely

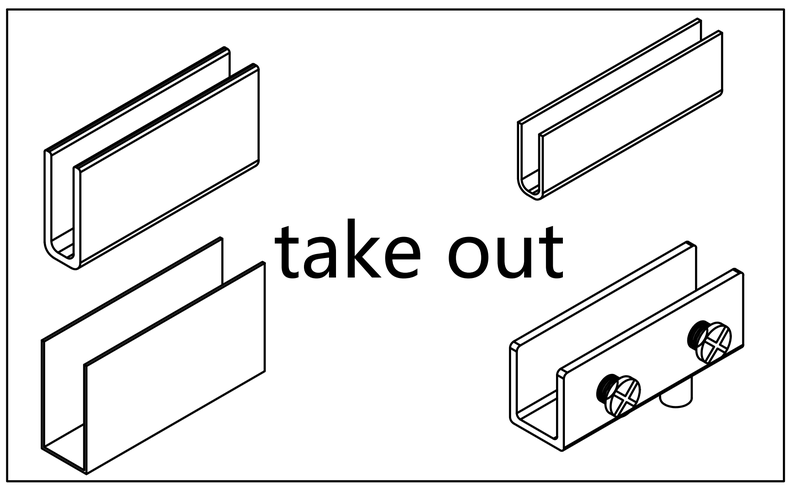

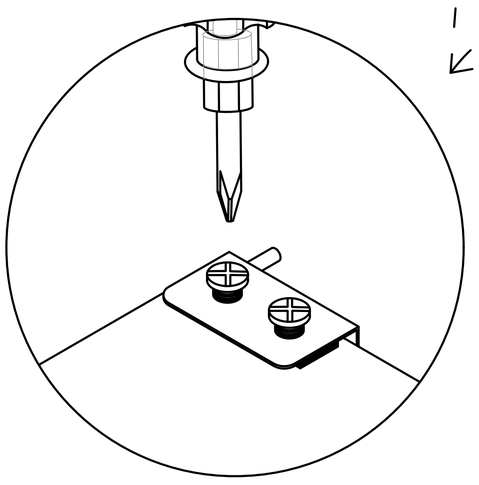

Locking screw

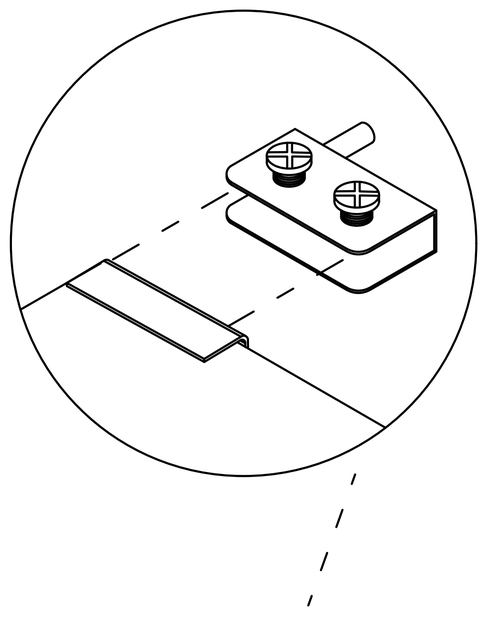

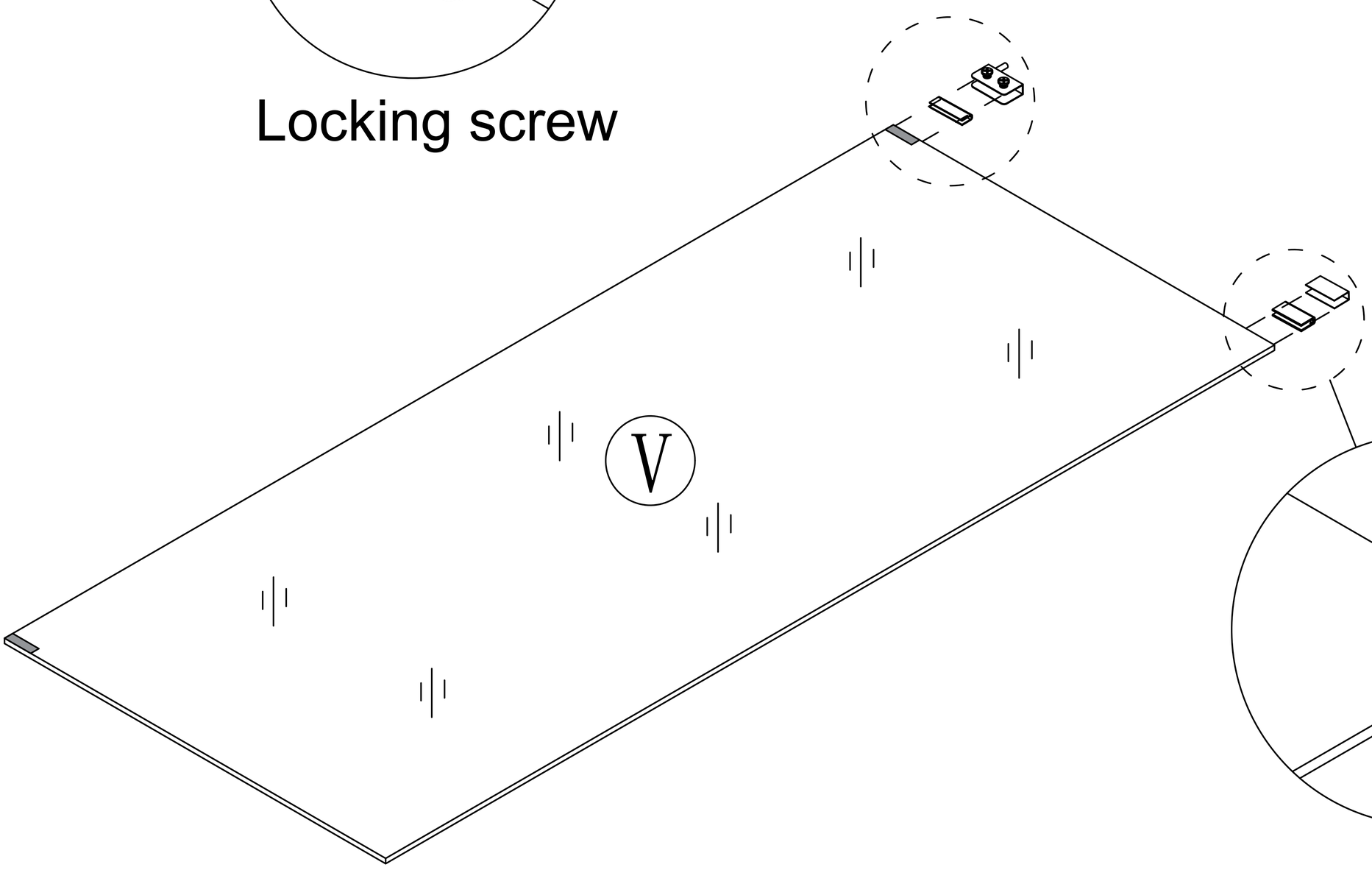

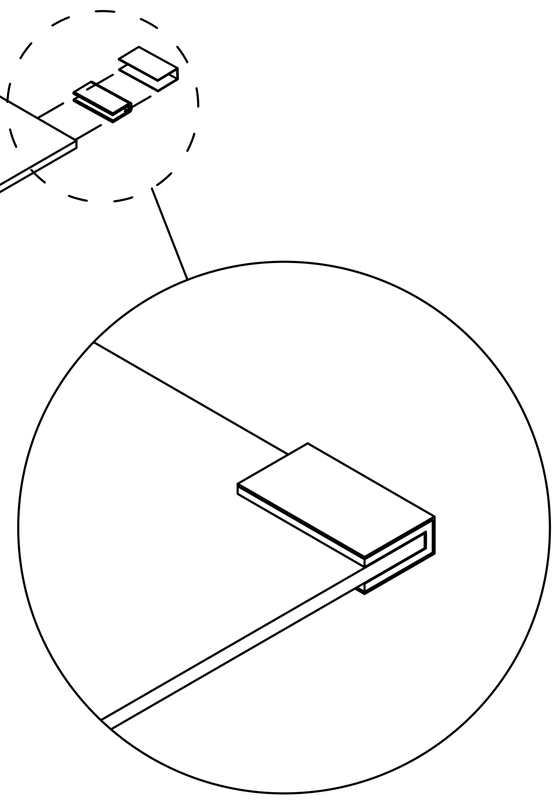

Step 45

Pay attention to the direction of the door hinge during installation

8 x2

When installing a glass door, it is recommended to have two people install it to avoid the glass door colliding or hitting oneself.

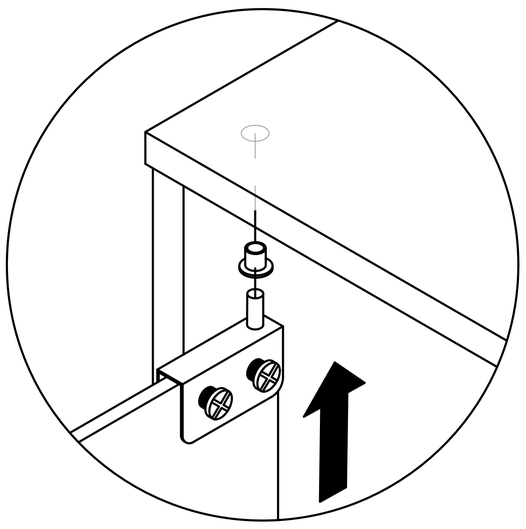

first

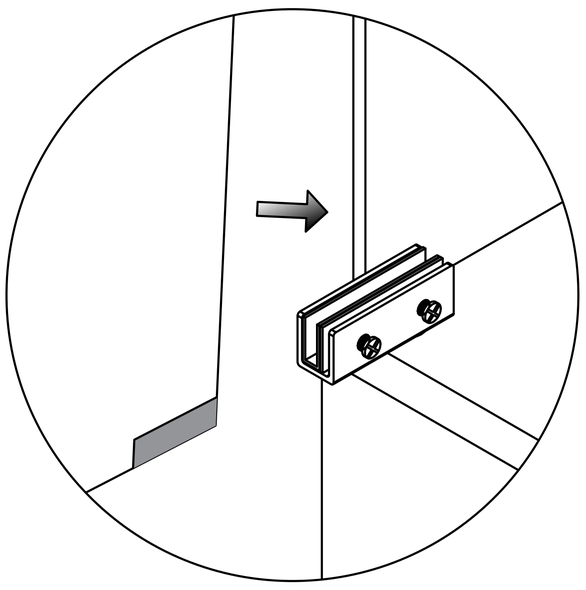

Remove white pad

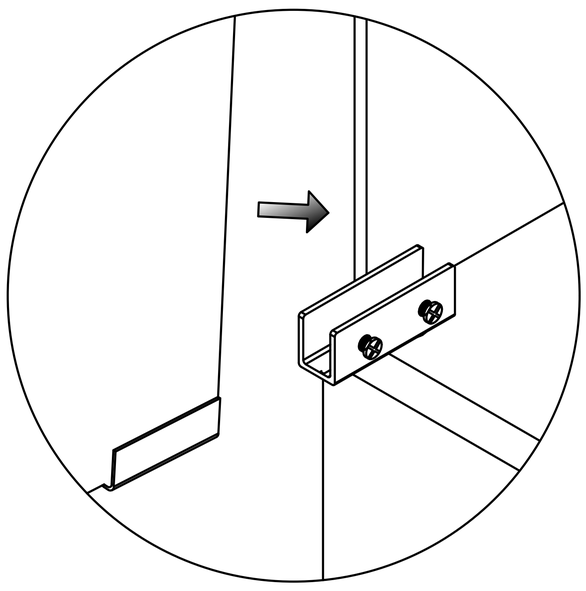

Fit the pad around glass edge

second

Insert the glass into the door hinge's slot.

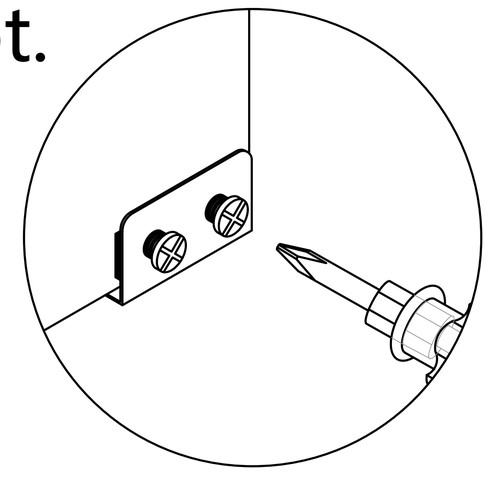

third

Locking screw

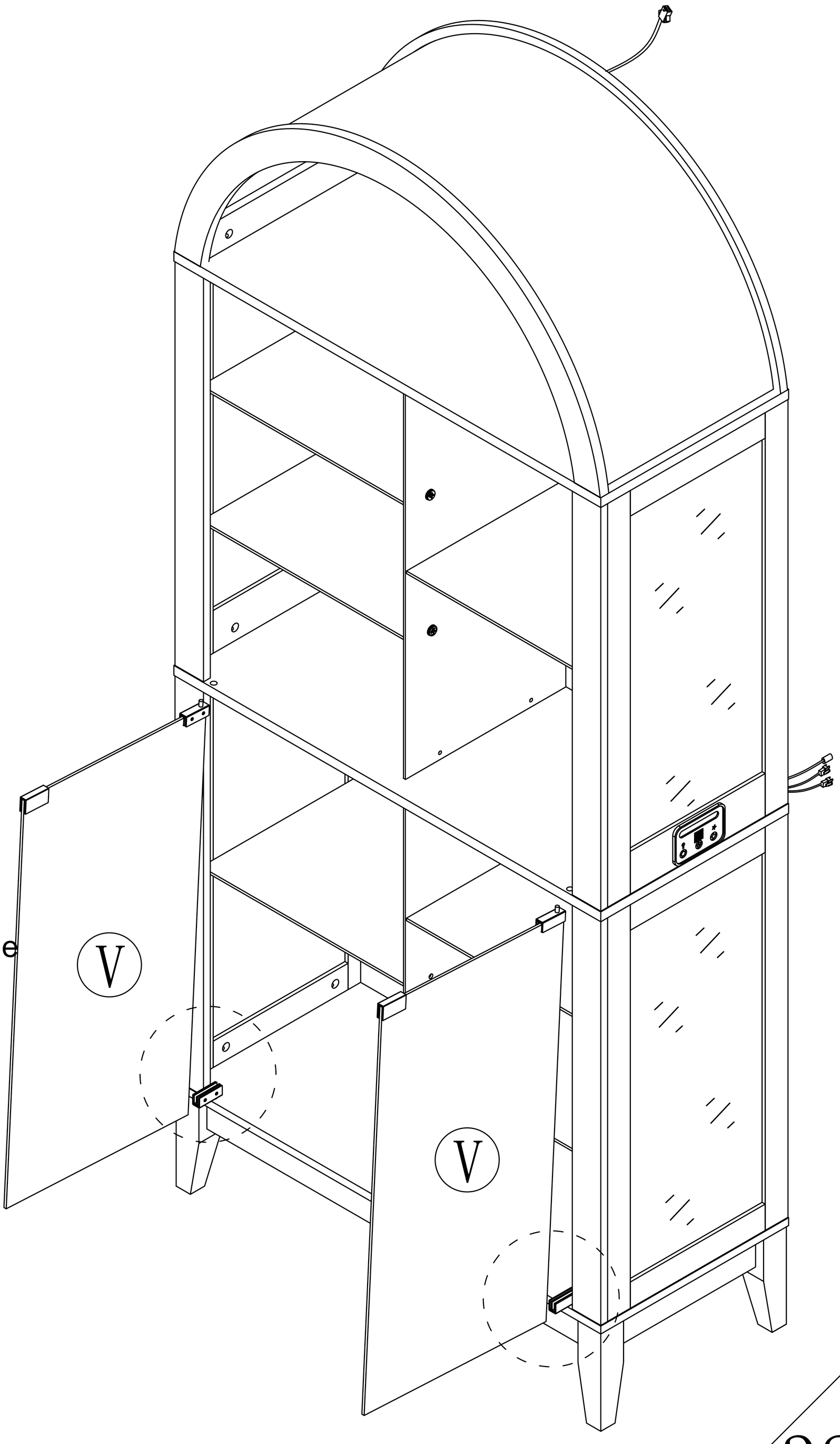

Step 46

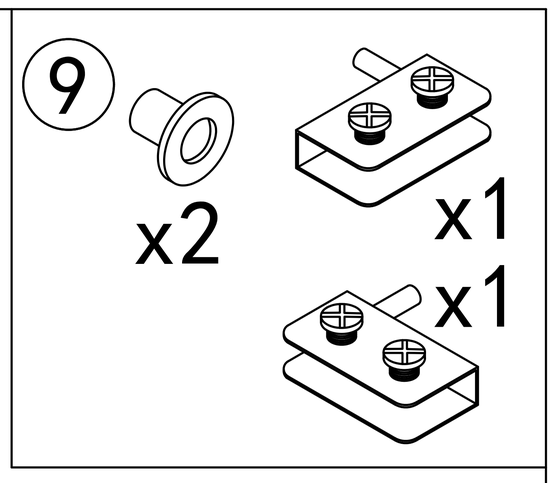

First, loosen the screws.

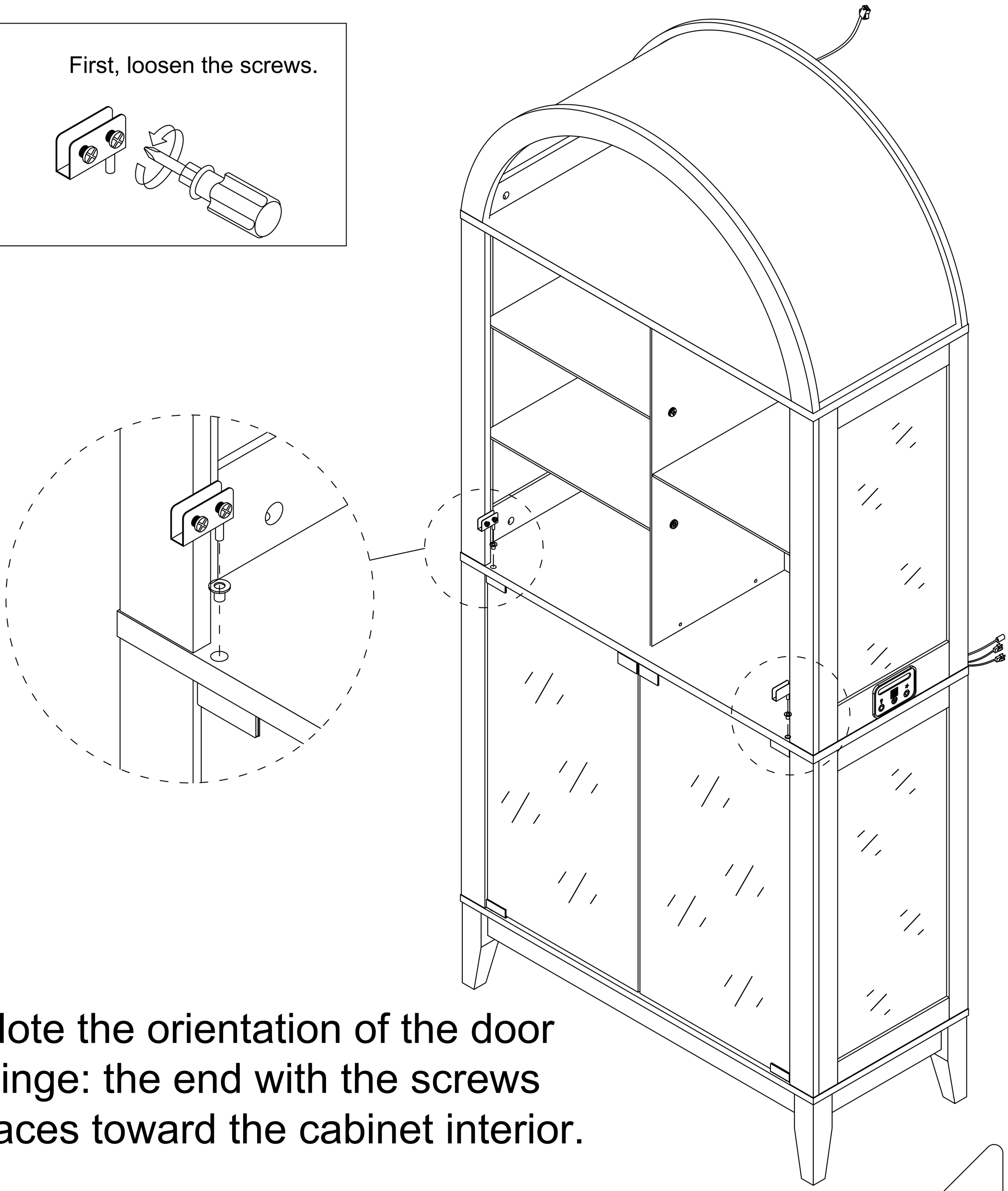

Note the orientation of the door hinge: the end with the screws faces toward the cabinet interior.

Step 47

First, loosen the screws.

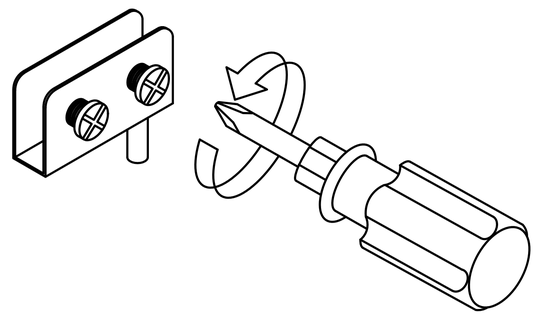

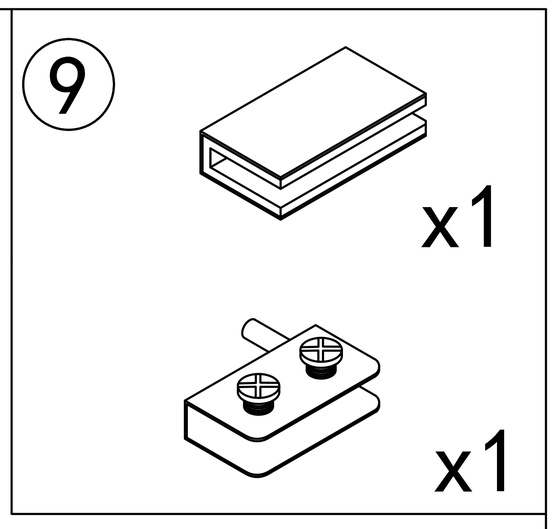

1. Take out the white pad
2. Fit the pad around the edge of the glass panel
3. Then slide the metal clamp over the assembled position
4. Finally, tighten the screws securely

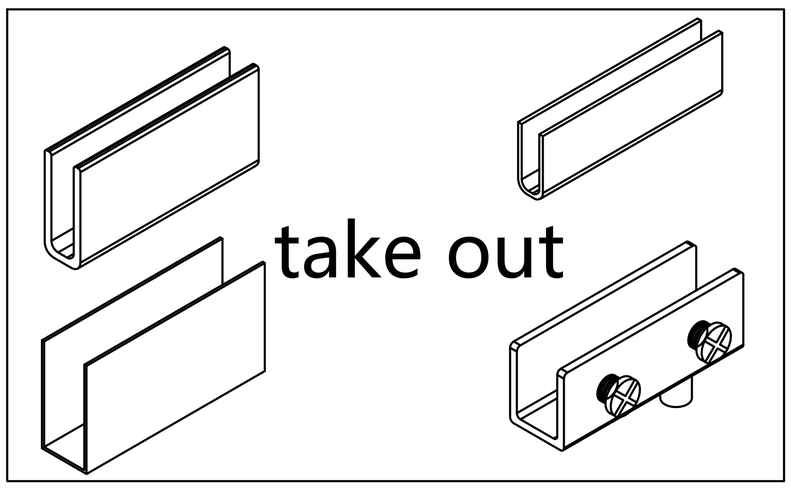

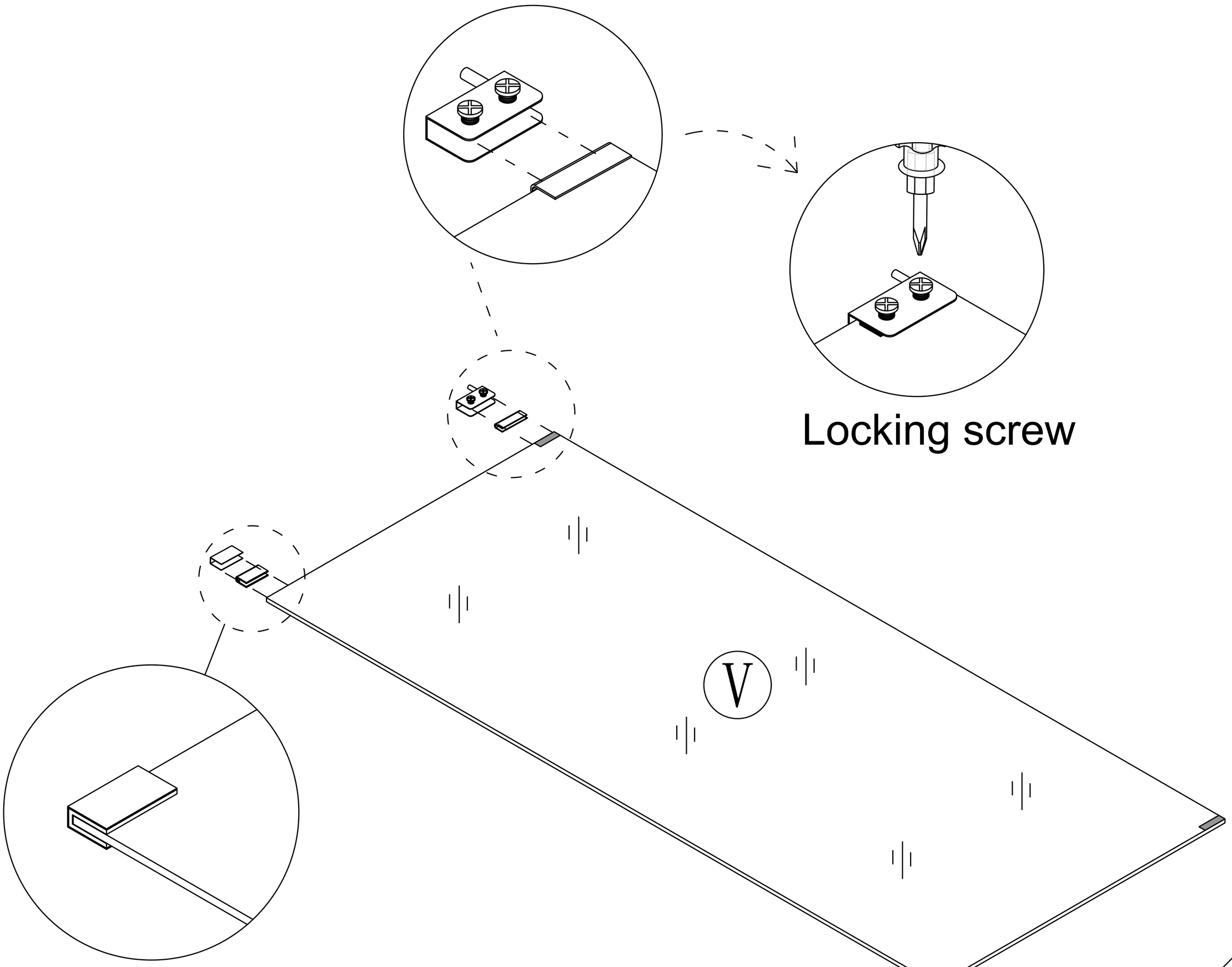

Step 48

First, loosen the screws.

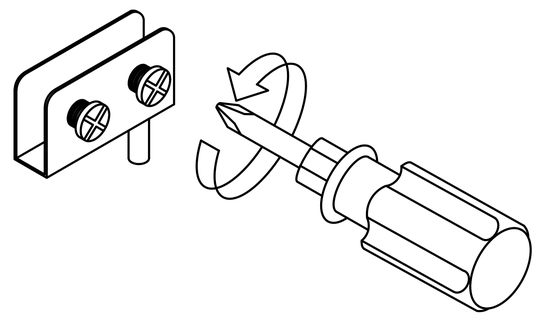

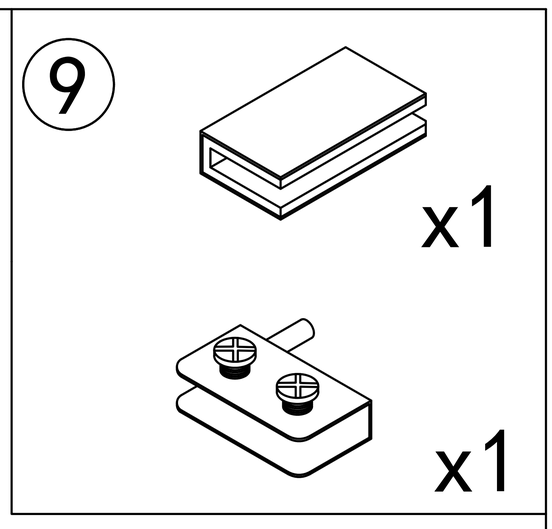

1. Take out the white pad
2. Fit the pad around the edge of the glass panel
3. Then slide the metal clamp over the assembled position
4. Finally, tighten the screws securely

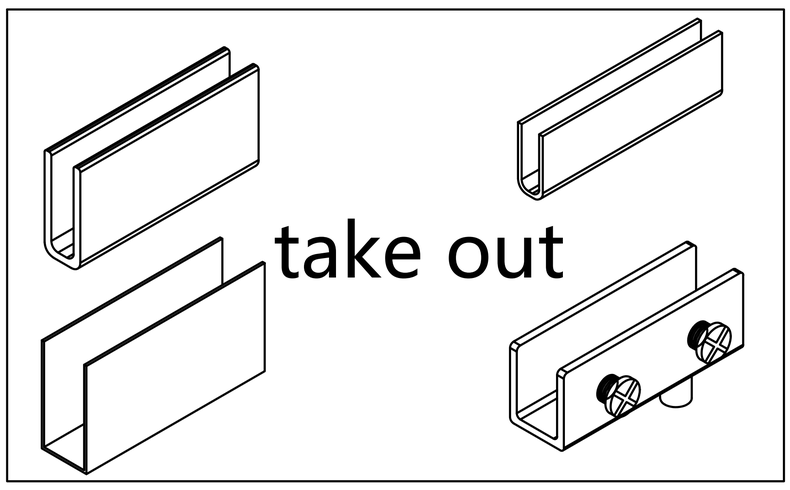

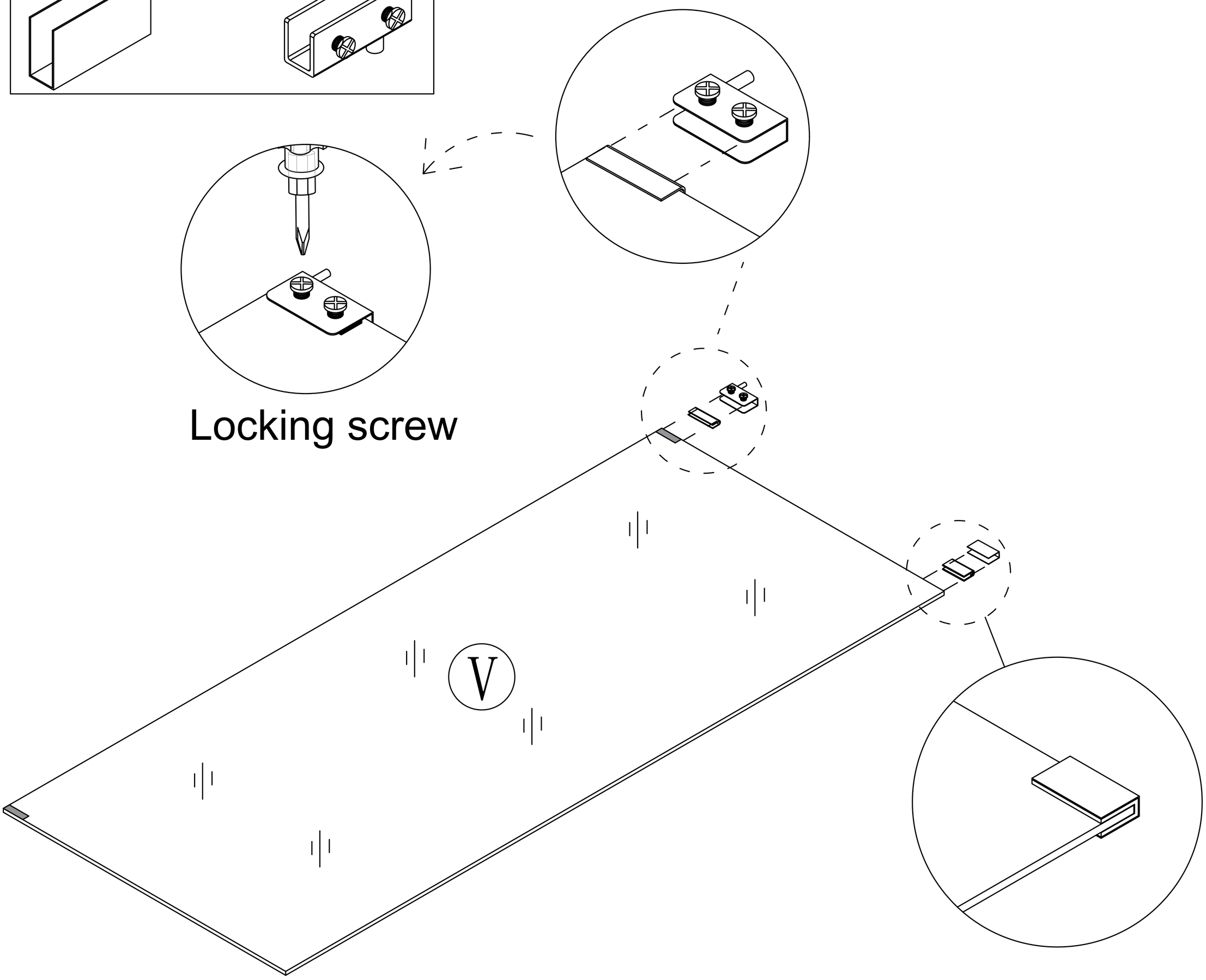

Step 49

Pay attention to the direction of the door hinge during installation

9

x2

When installing a glass door, it is recommended to have two people install it to avoid the glass door colliding or hitting oneself.

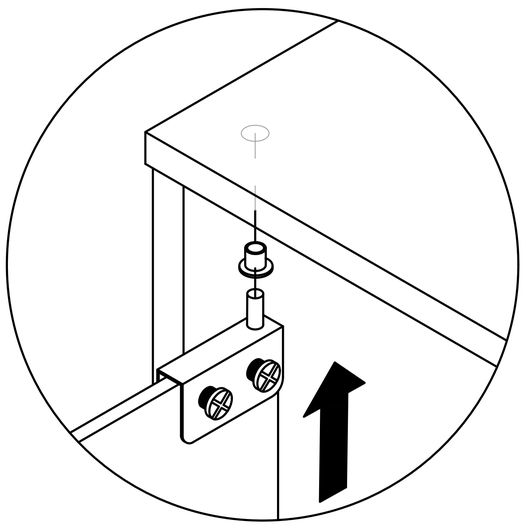

first

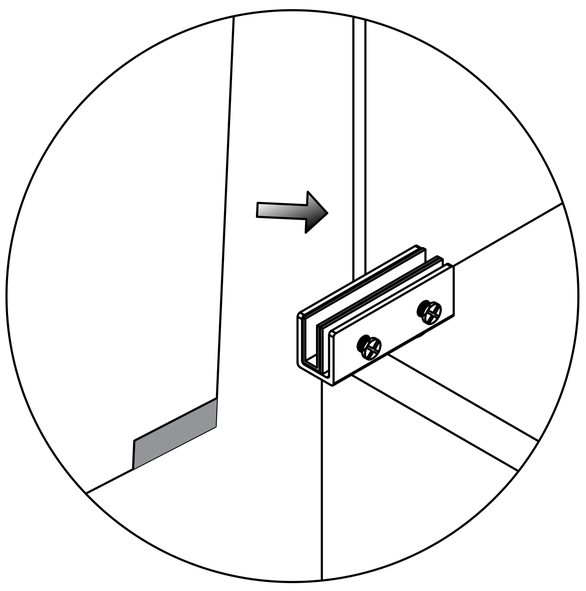

Remove white pad

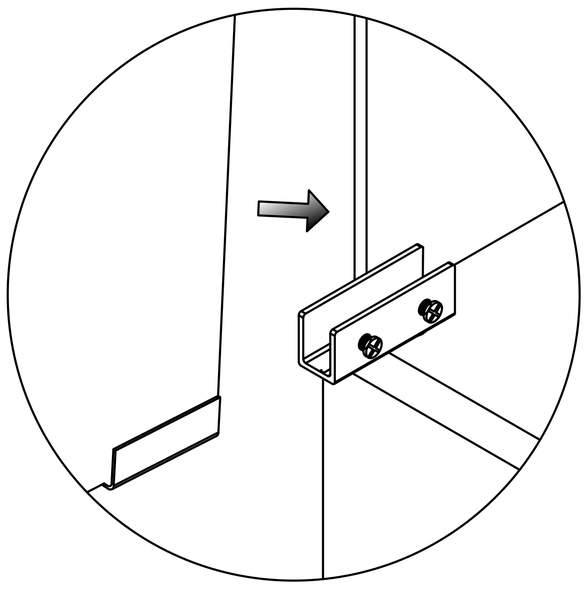

Fit the pad around glass edge

second

Insert the glass into the door hinge's slot.

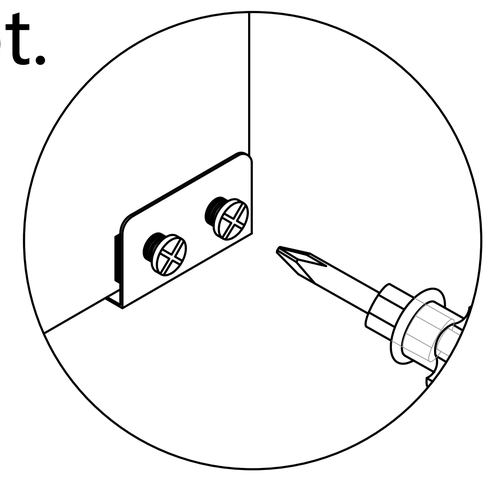

third

Locking screw

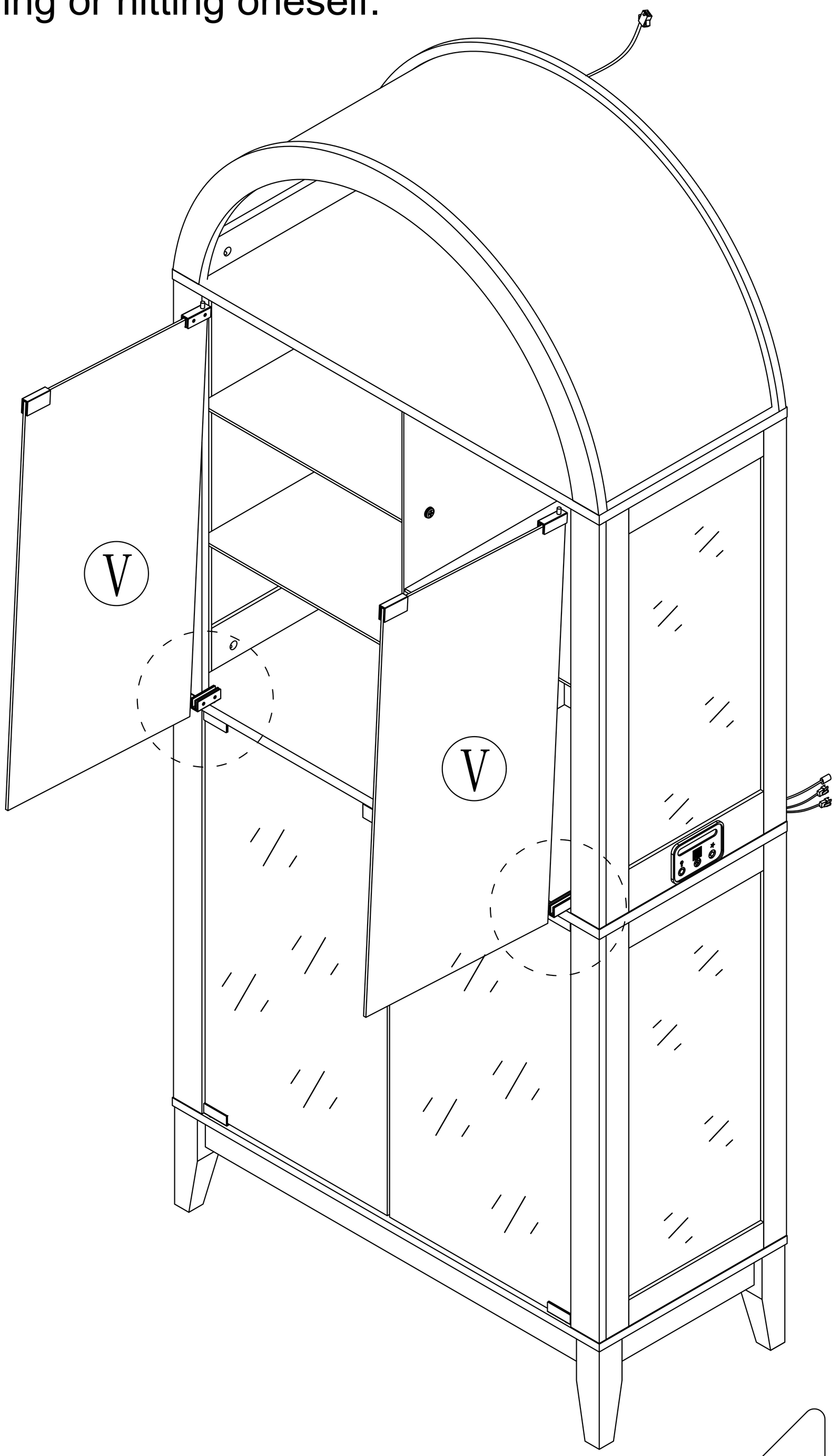

Step 50

Open the glass door

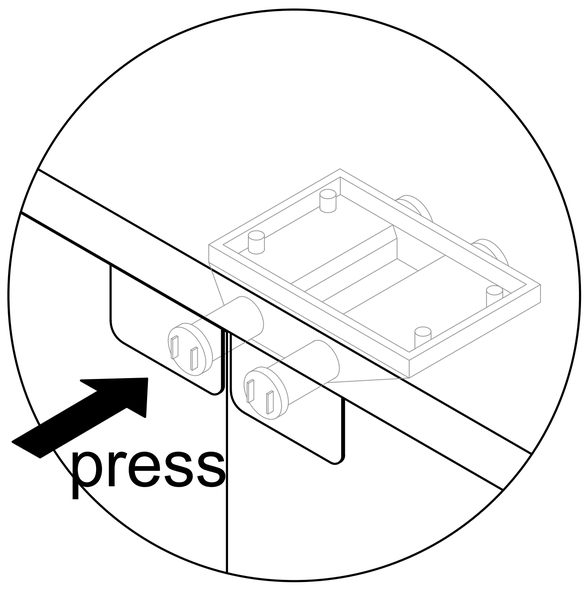

Close the glass door

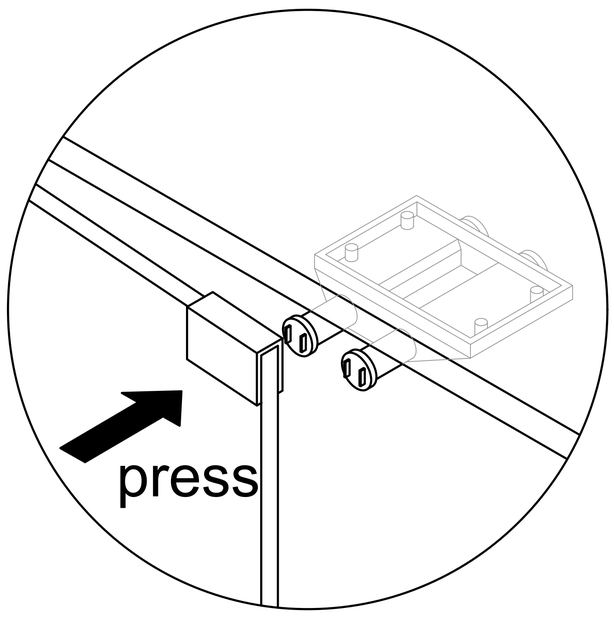

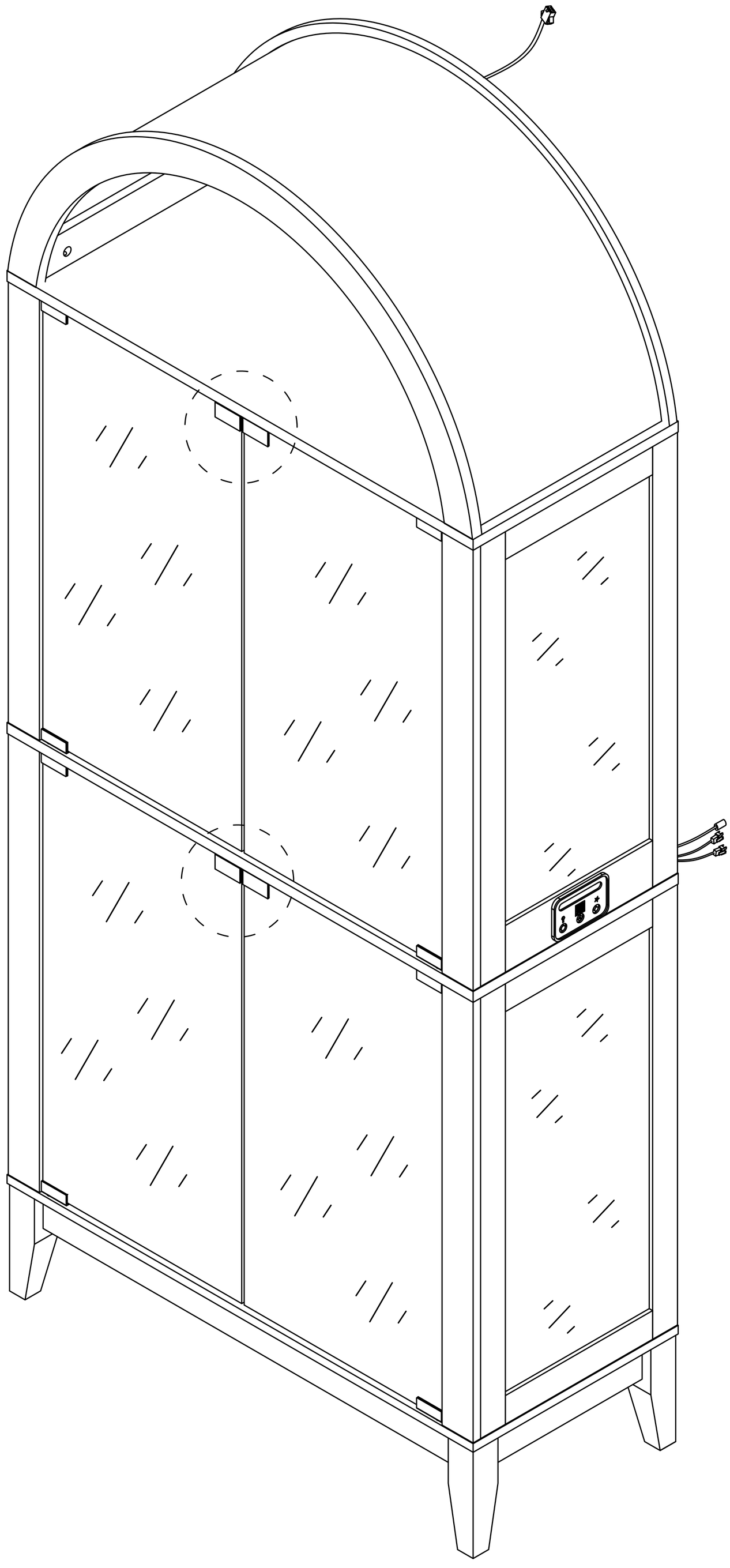

Step 51

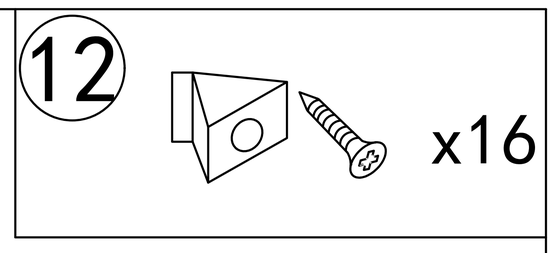

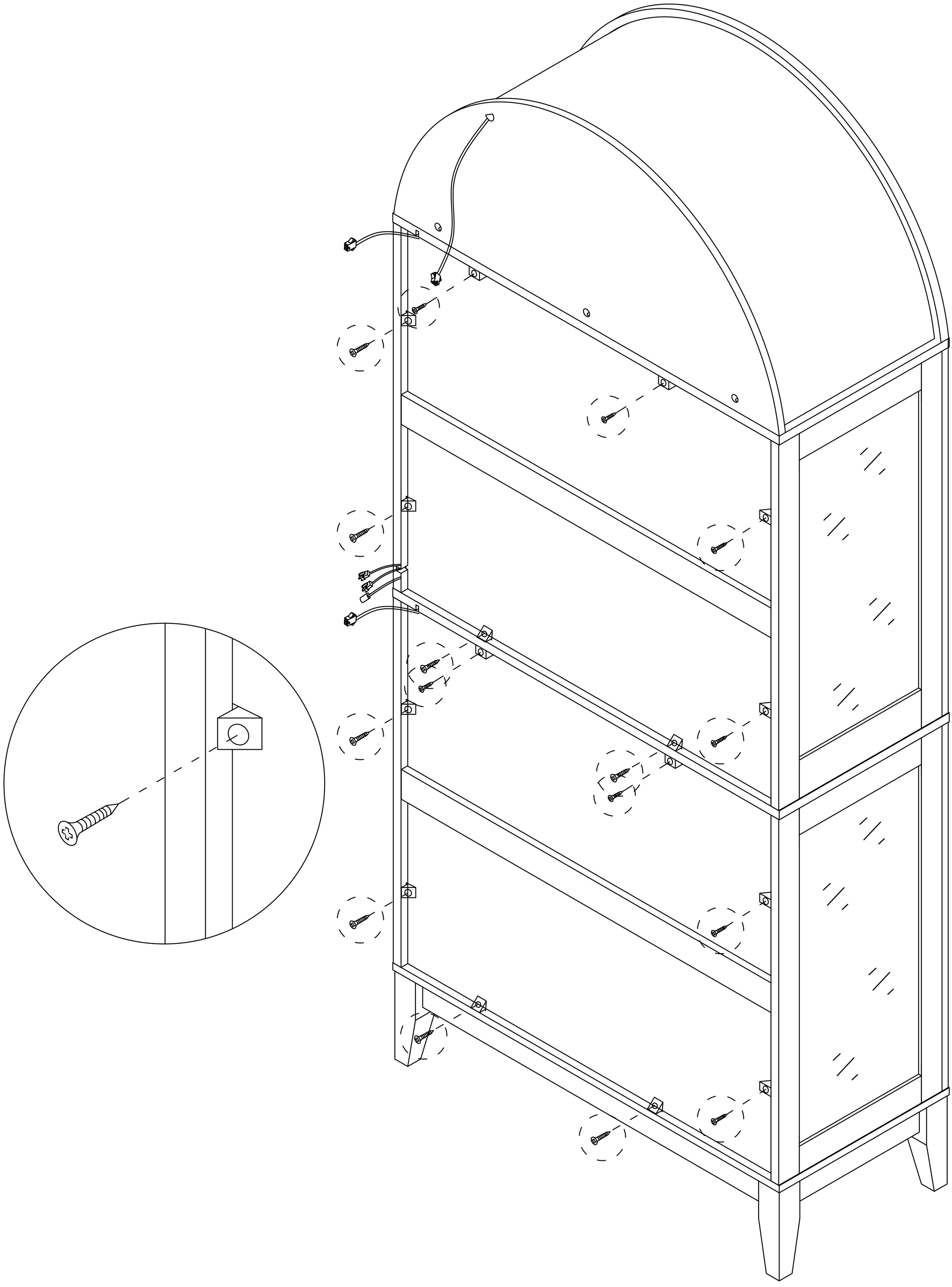

Step 52

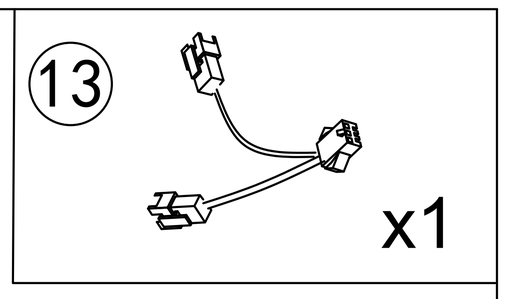

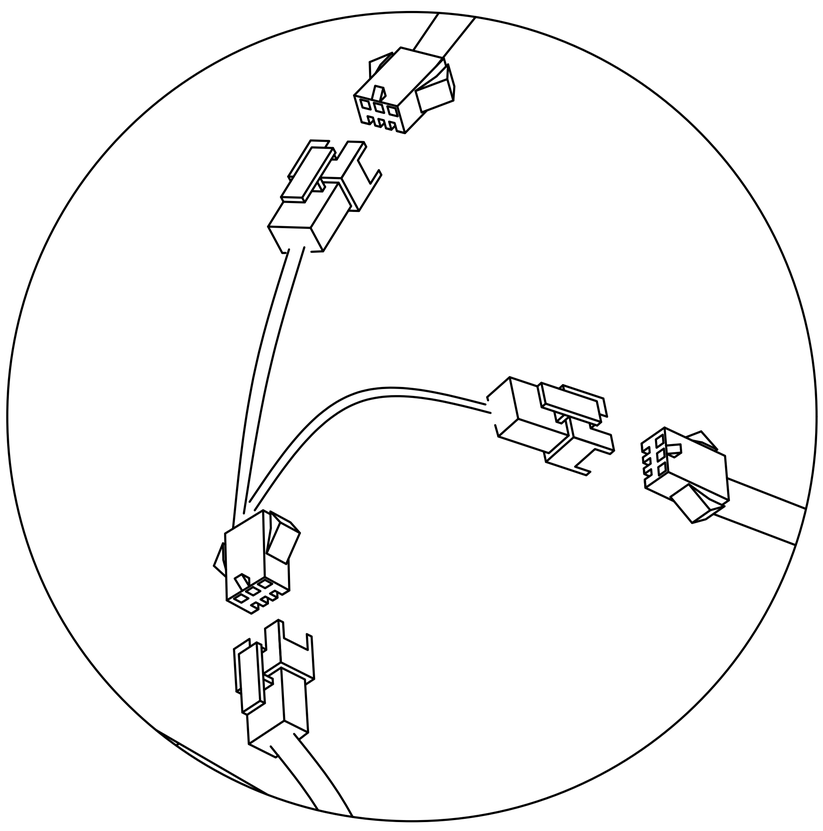

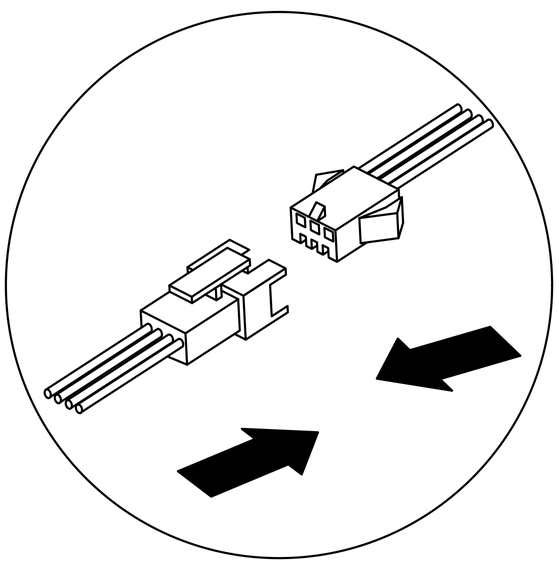

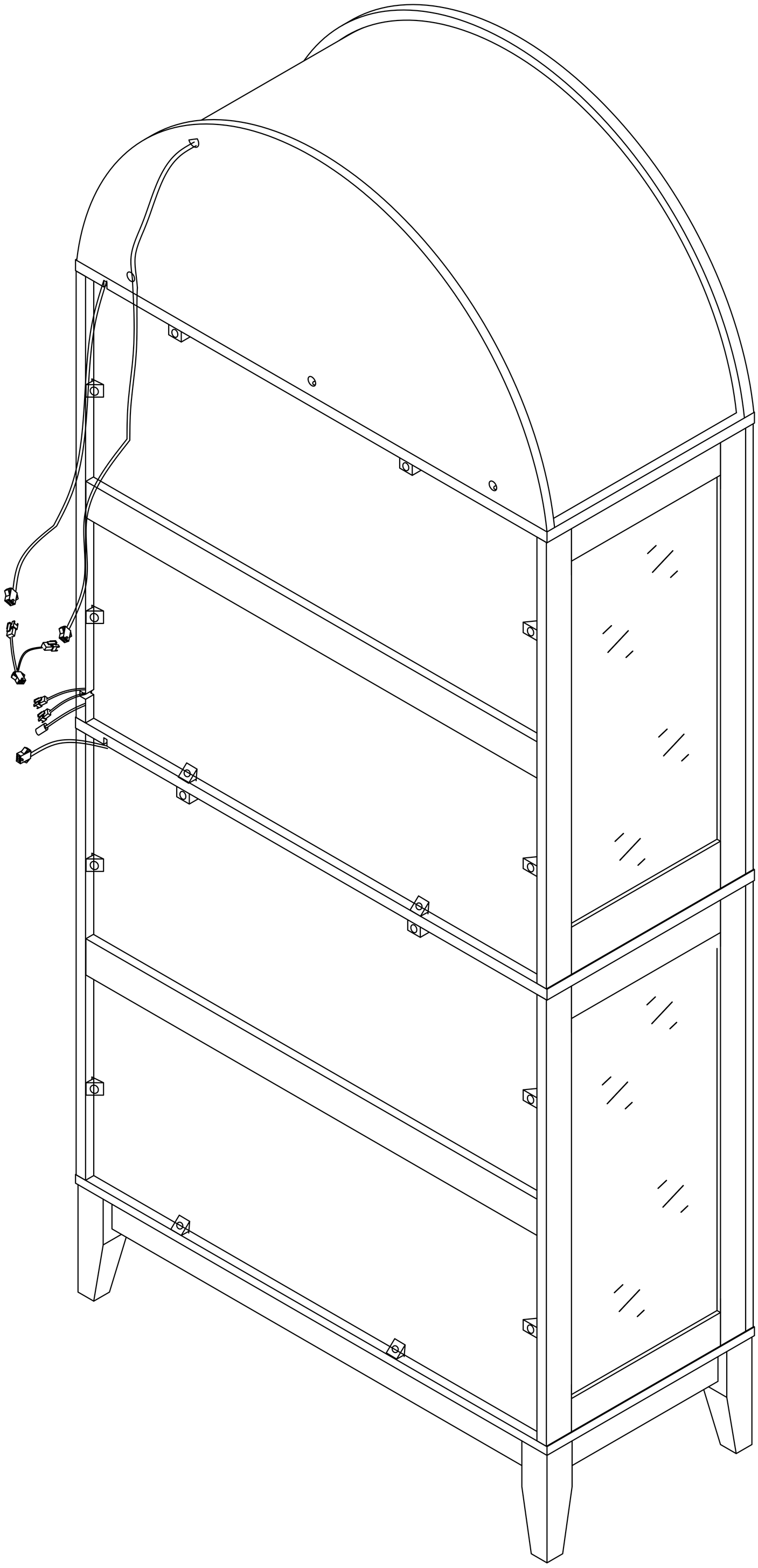

Step 53

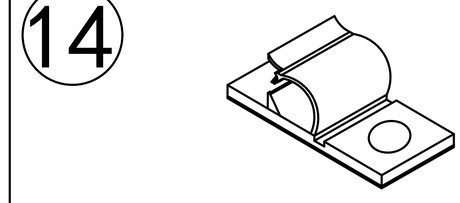

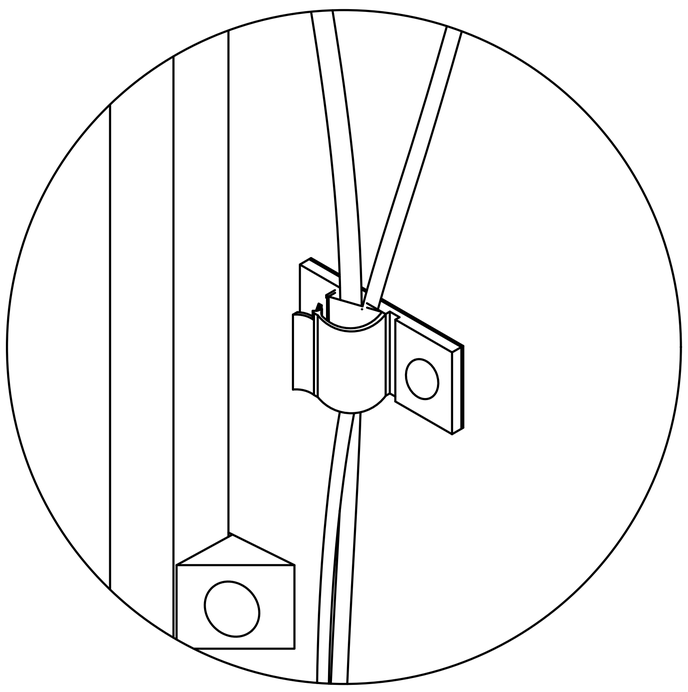

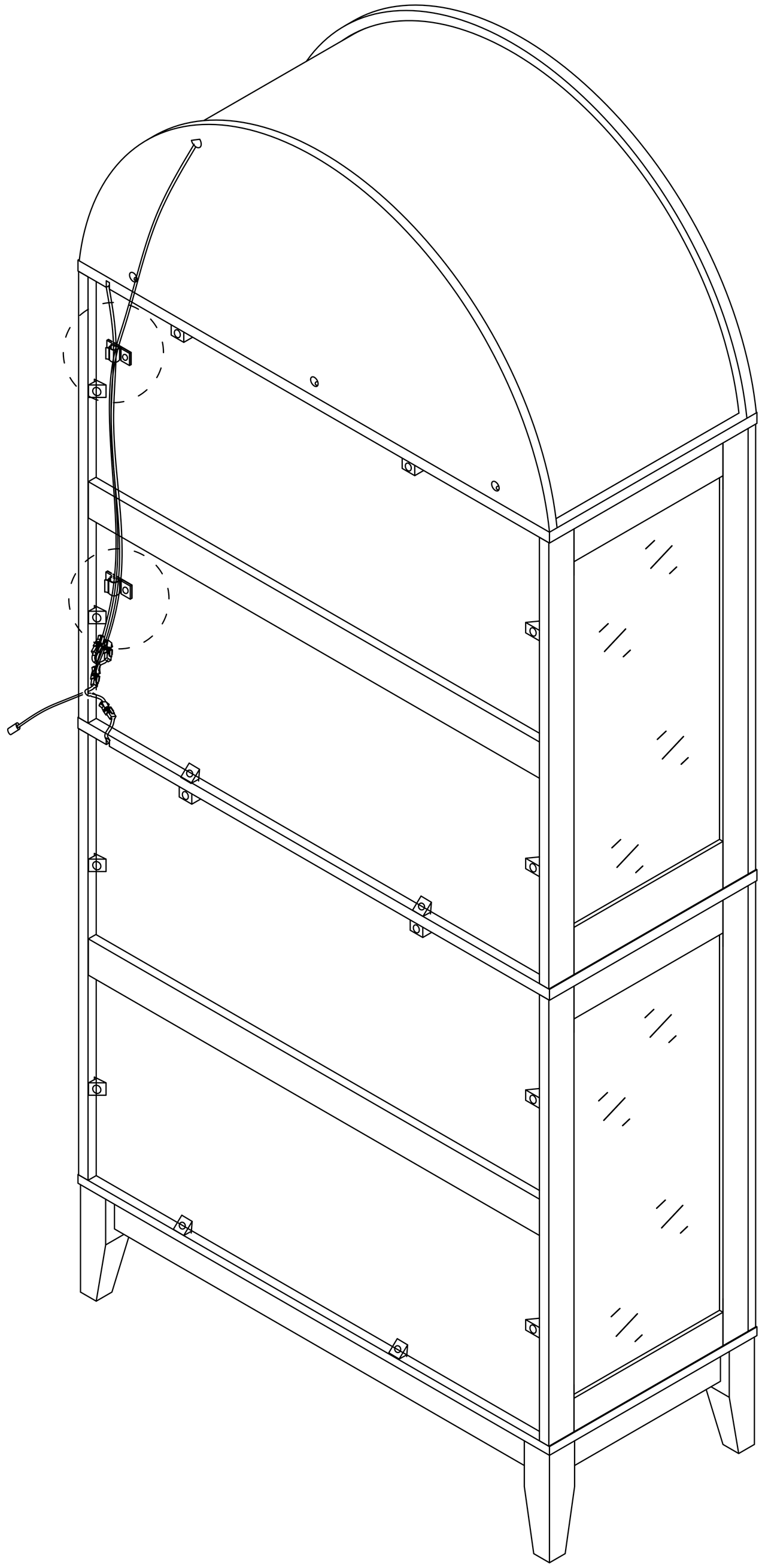

Step 54

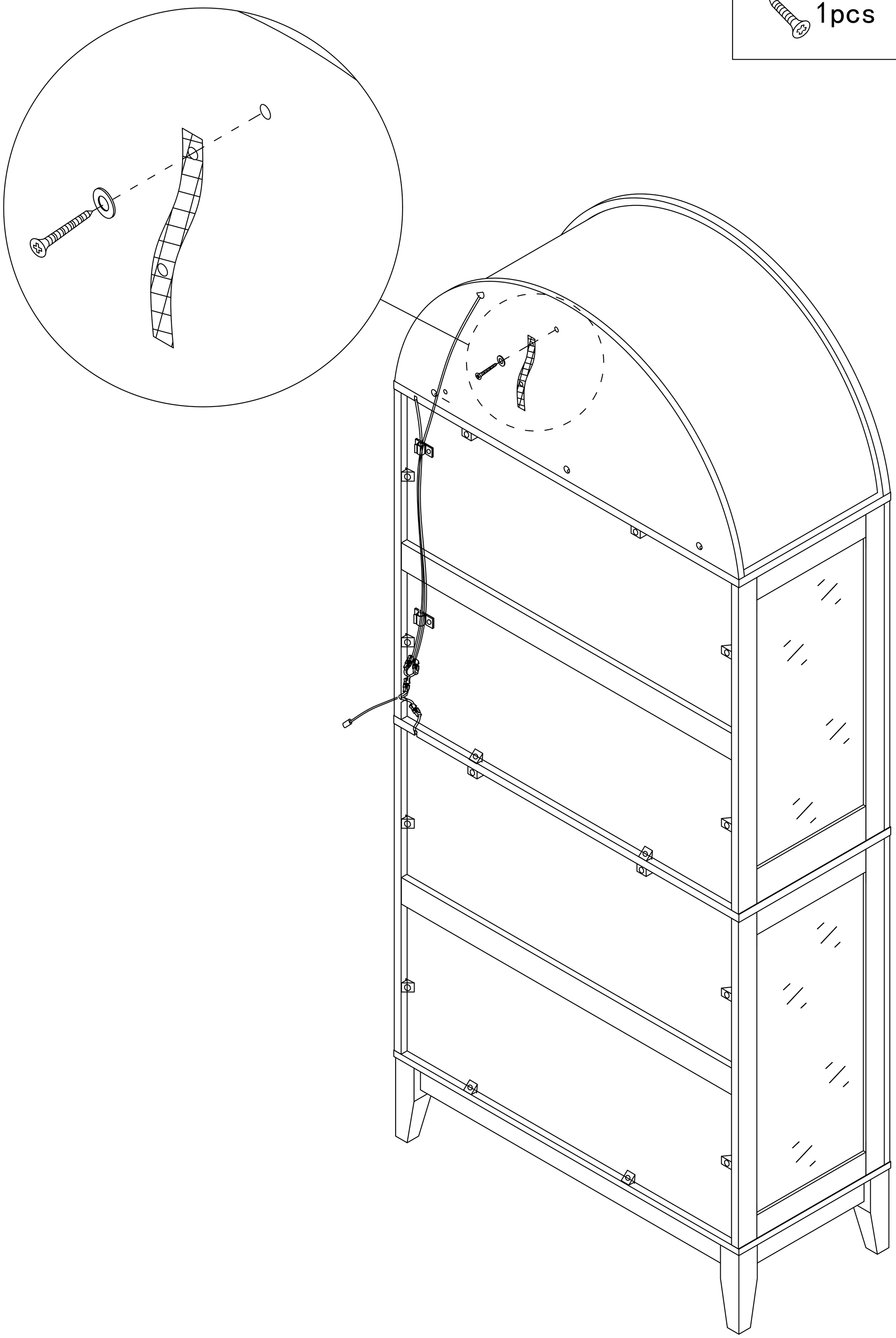

15	1pcs
	1pcs
	1pcs

Step 55

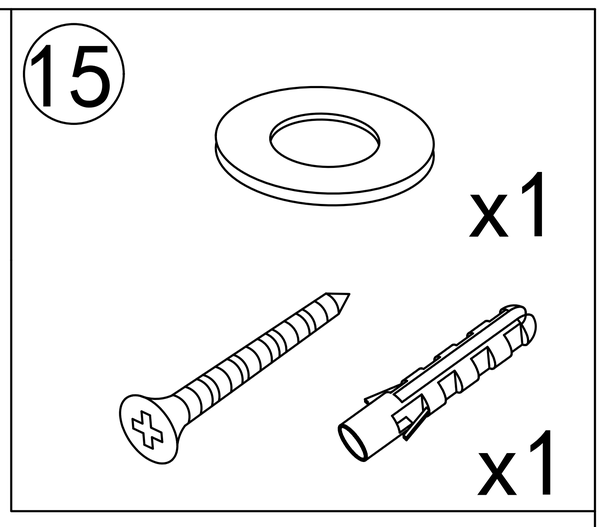

use a ruler to measure theapproximate height of the producton the wall, and then mark it witha pencil.

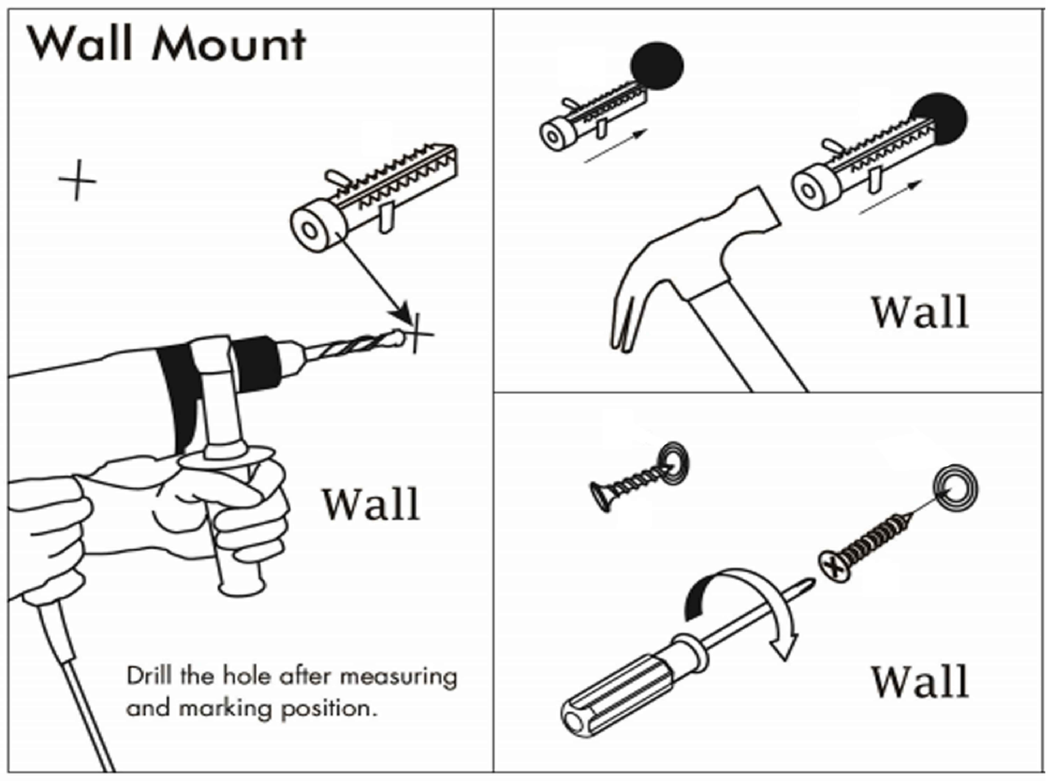

Put the expansion bolt into the hole.

Pass the matching screws throughthe "anti-rewind" and tighten themto fix them on the wall.

Use a tape drill to make holesin the wall that are suitable for theproduct screws.

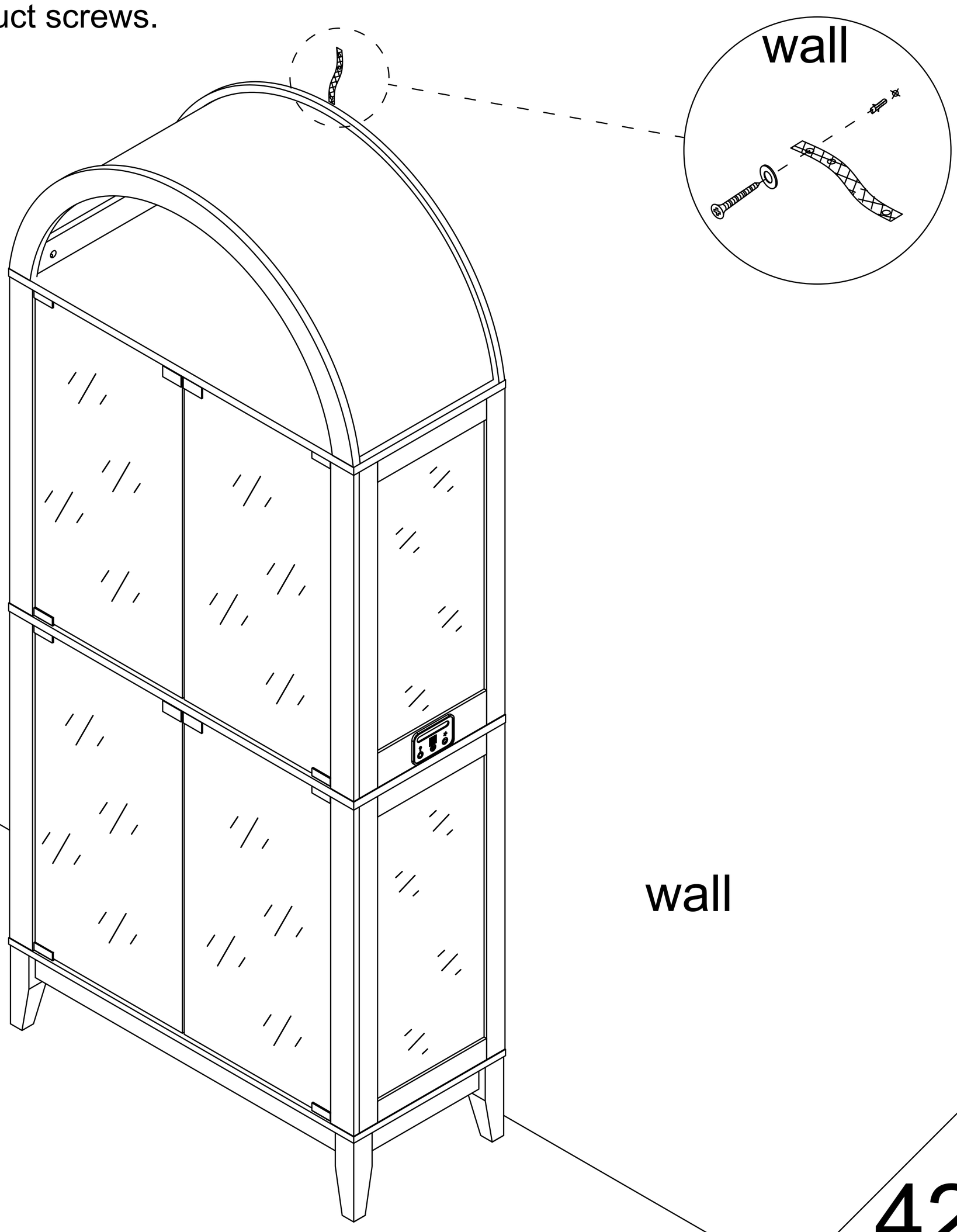

Step 56

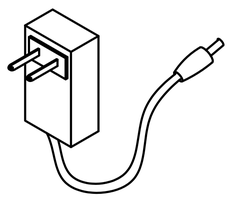

x1

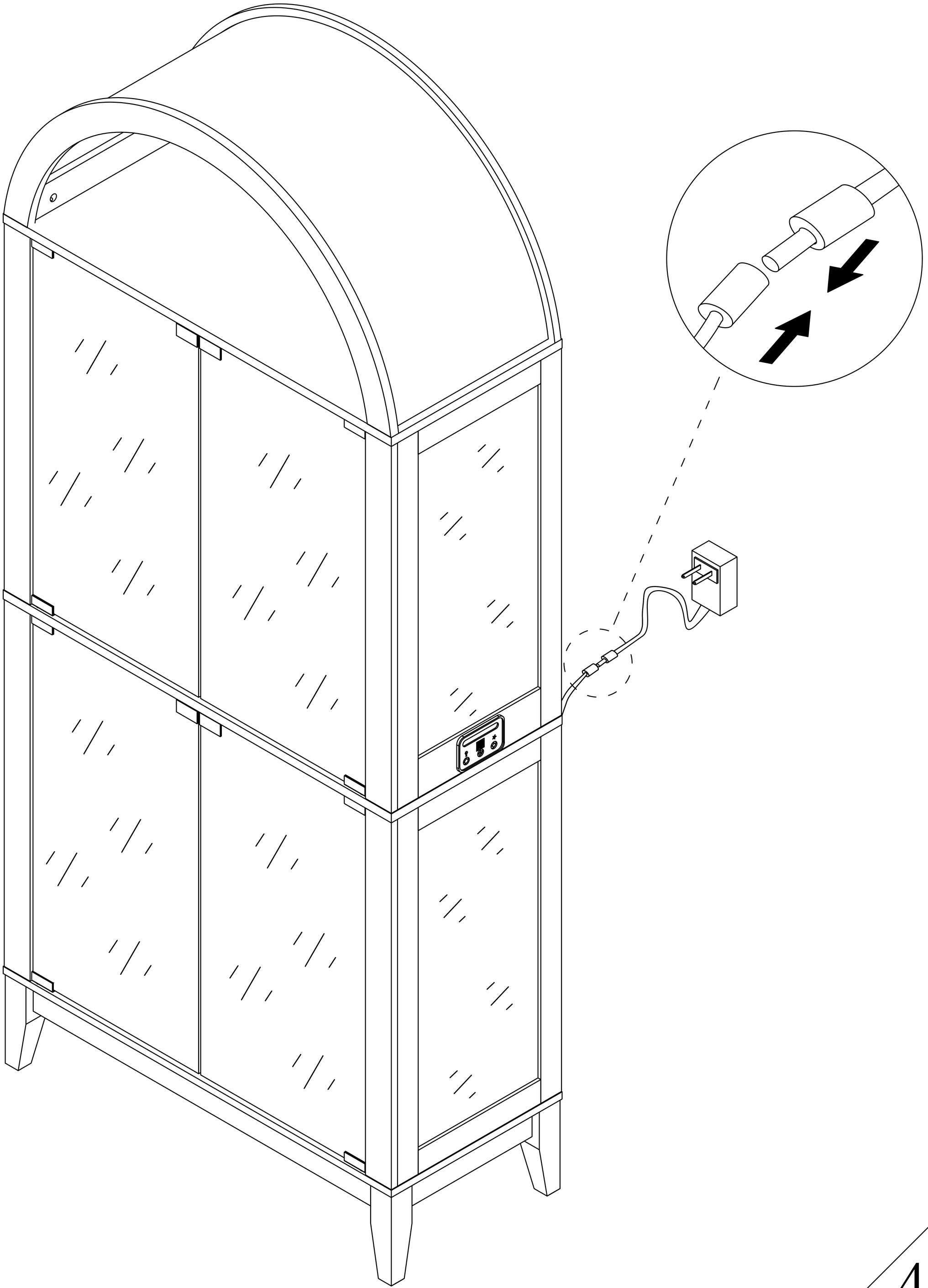

Smart Box Plug Power Off

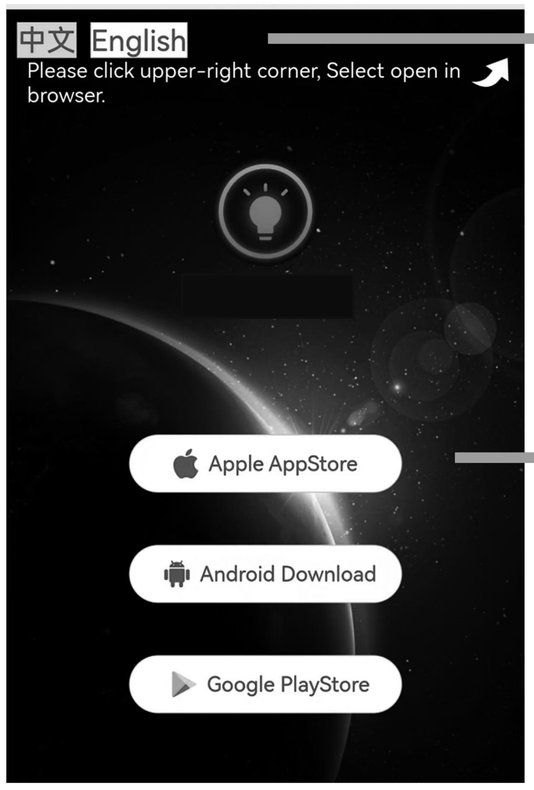

Select English Language

Select the corresponding device to download.
Note: If the download fails,
please turn off the "Enhanced Protection"
in the Pure Mode settings of the device.

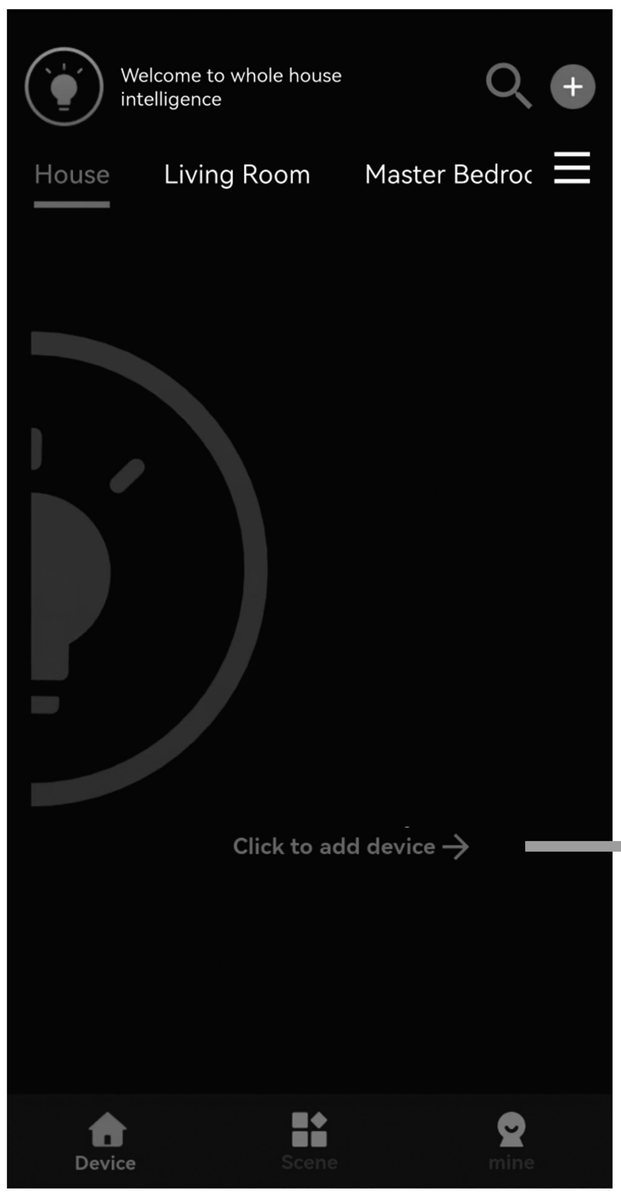

①

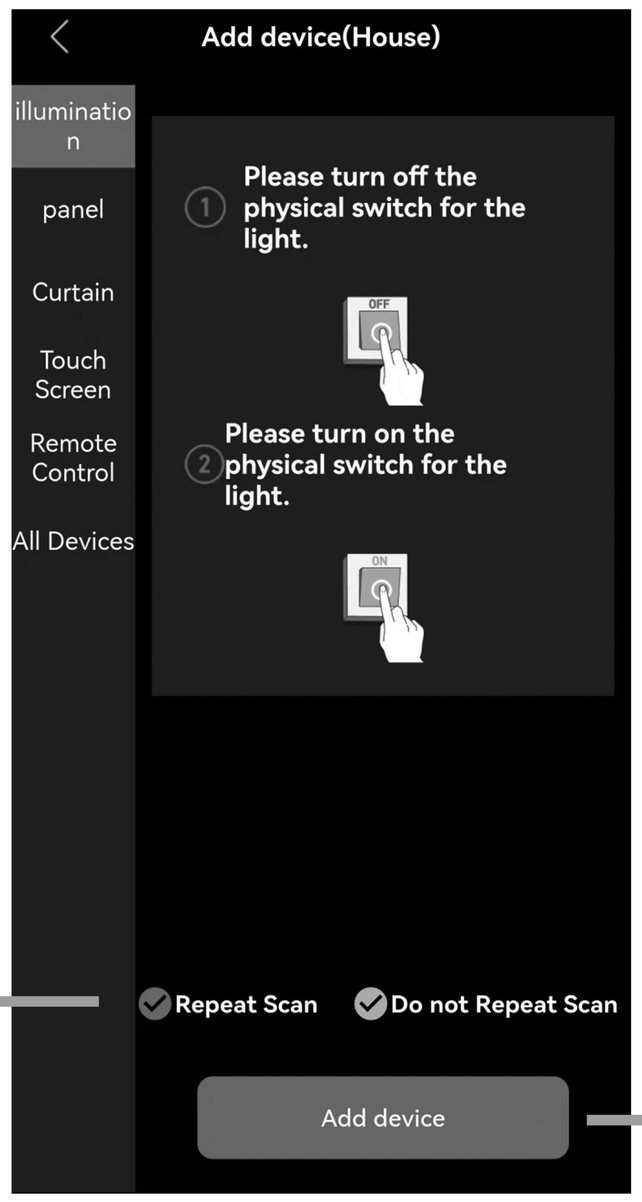

②

It turns blue after clicking

③

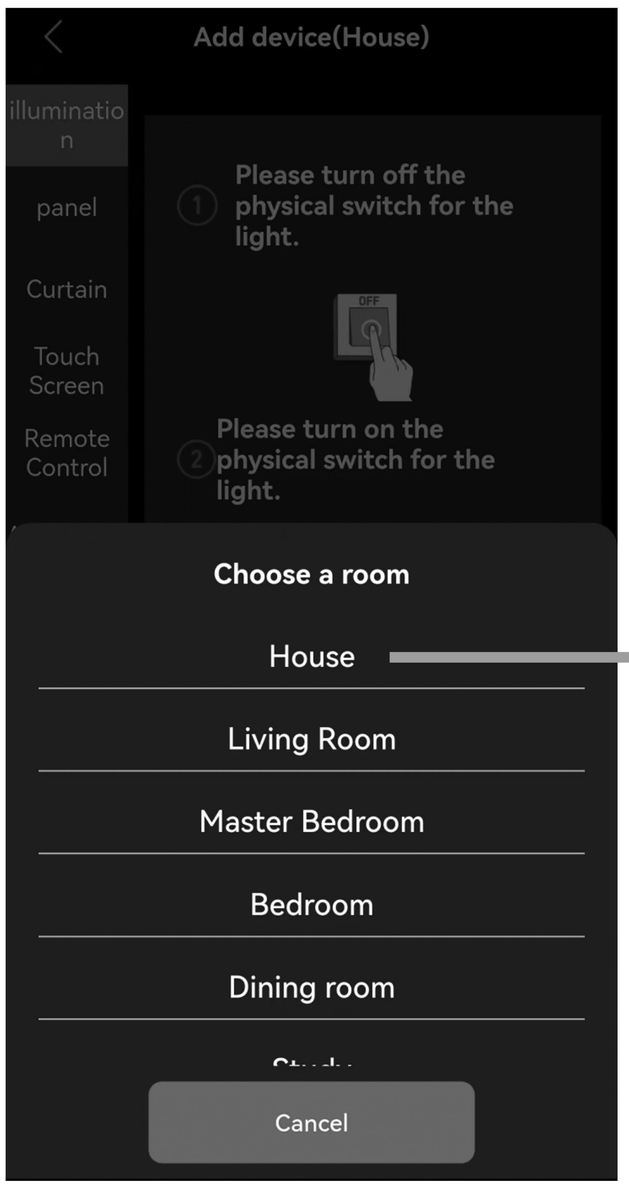

④

⑤ Unplug the smart box

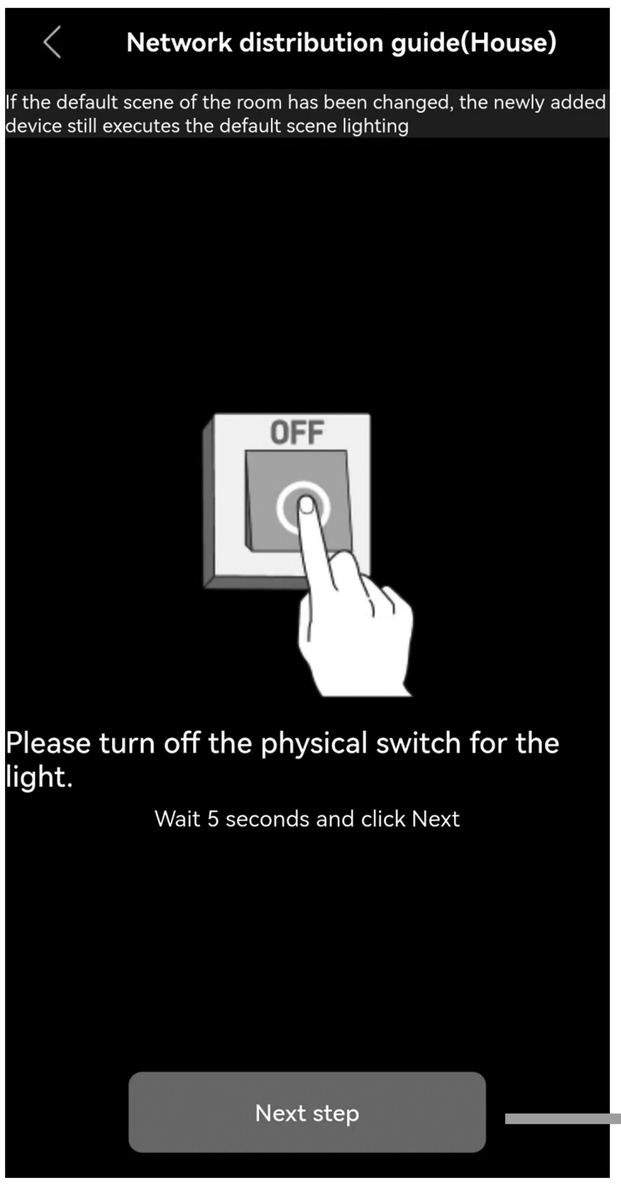

⑥

⑦ Plug in the smart box power plug.

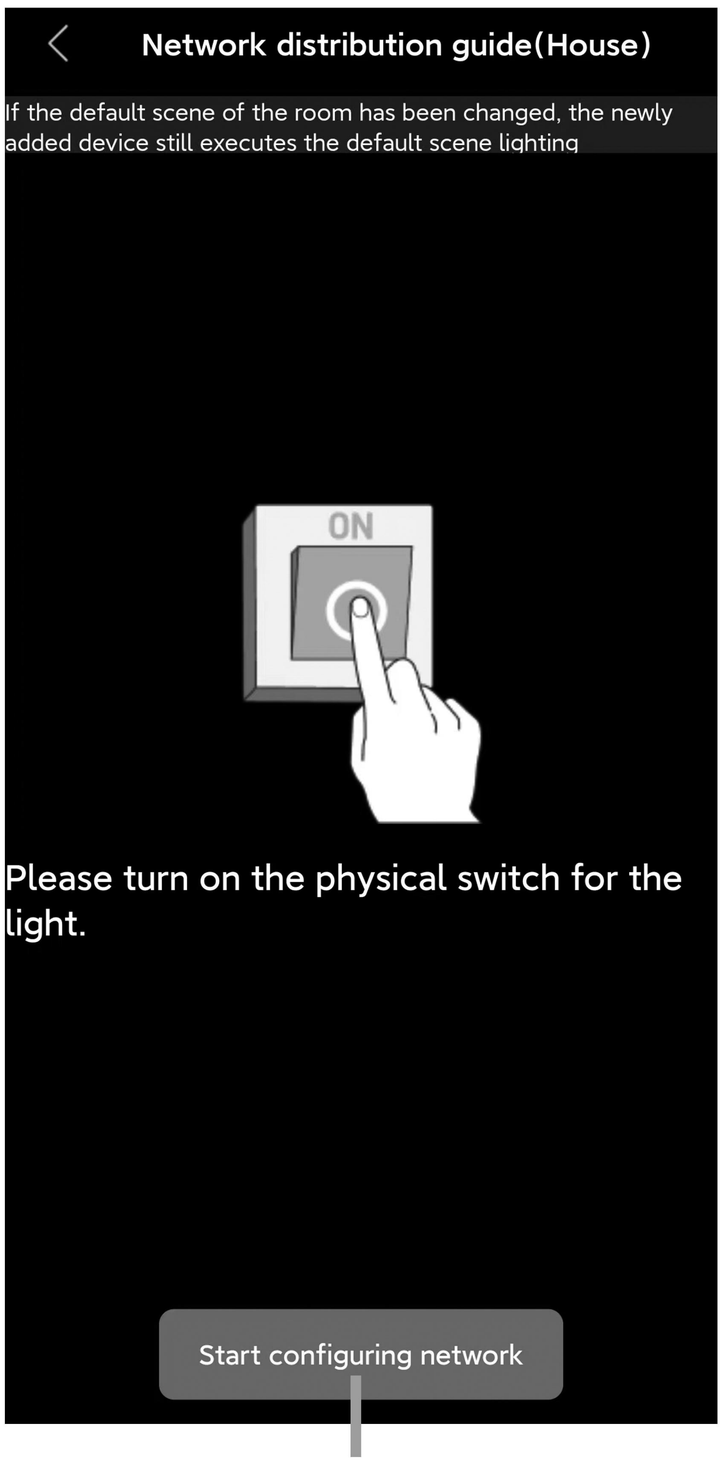

⑧

The appearance of this program icon indicates that the matching is complete

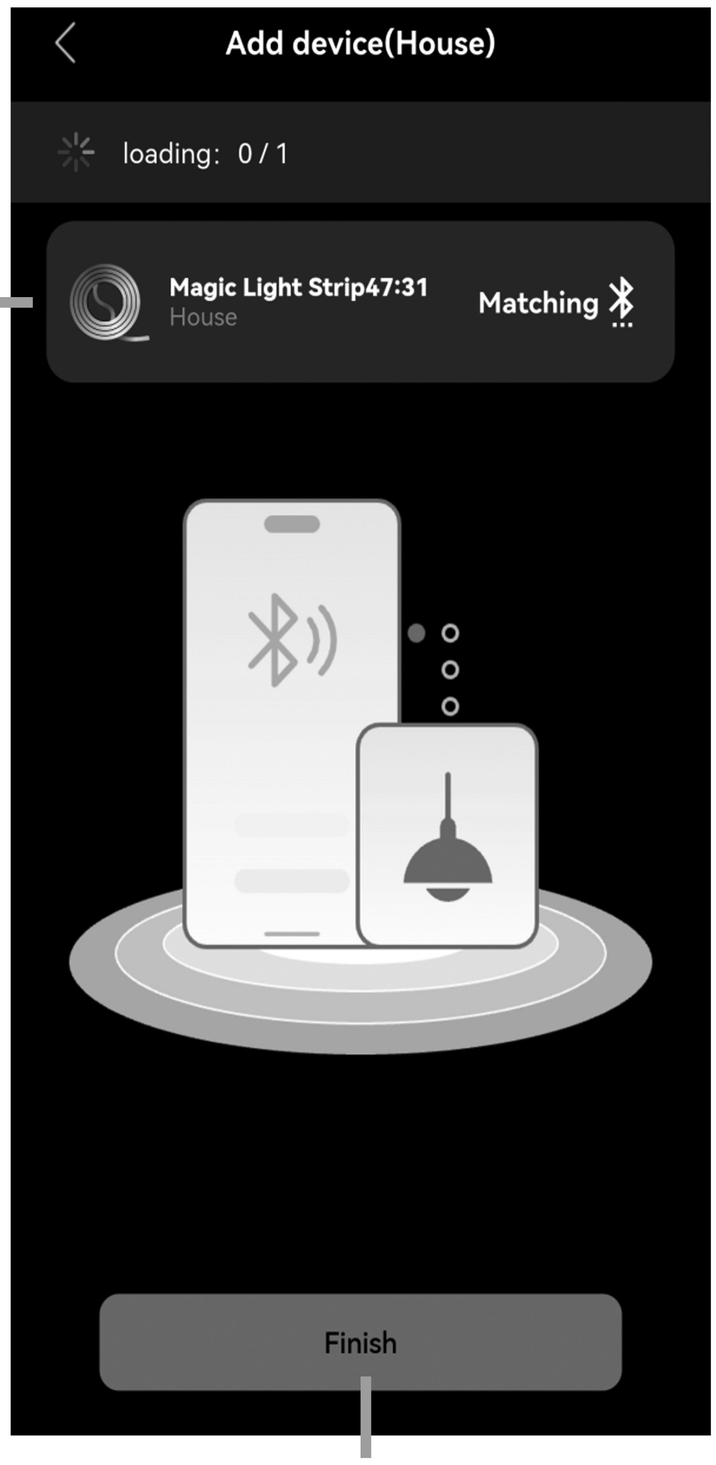

⑨

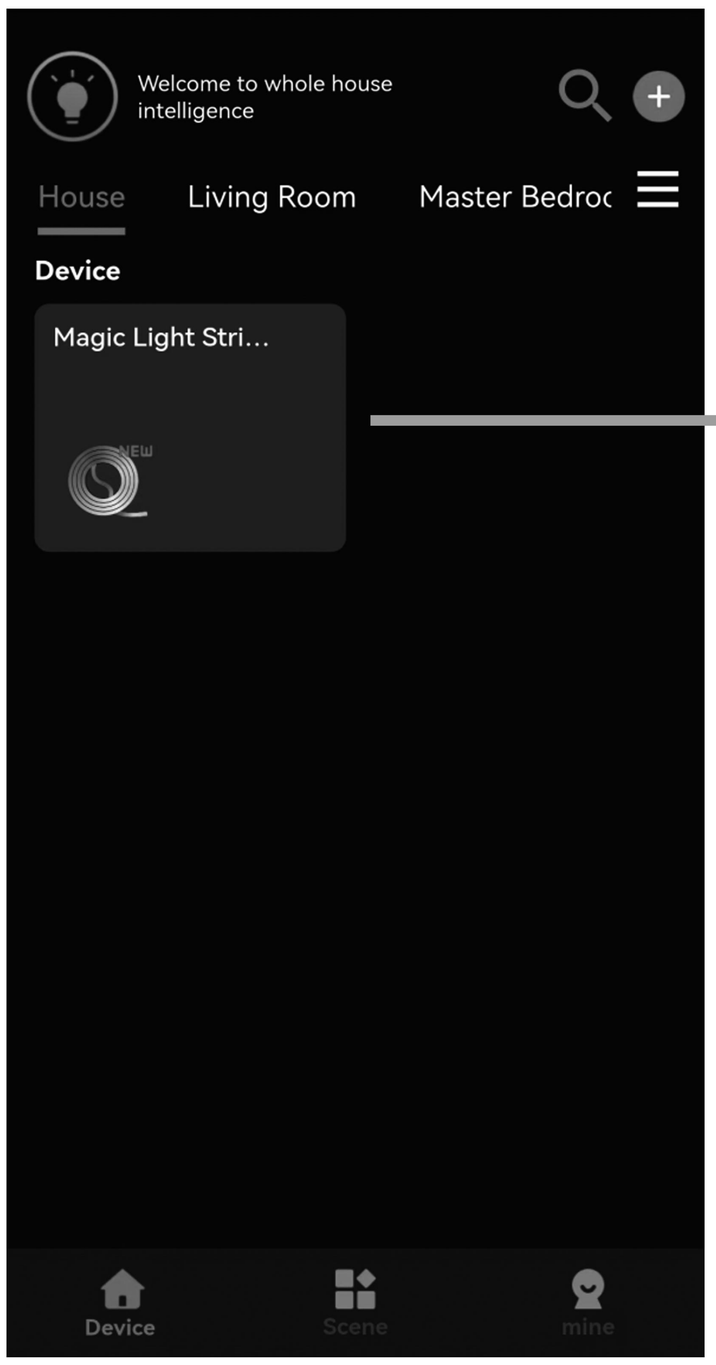

⑩

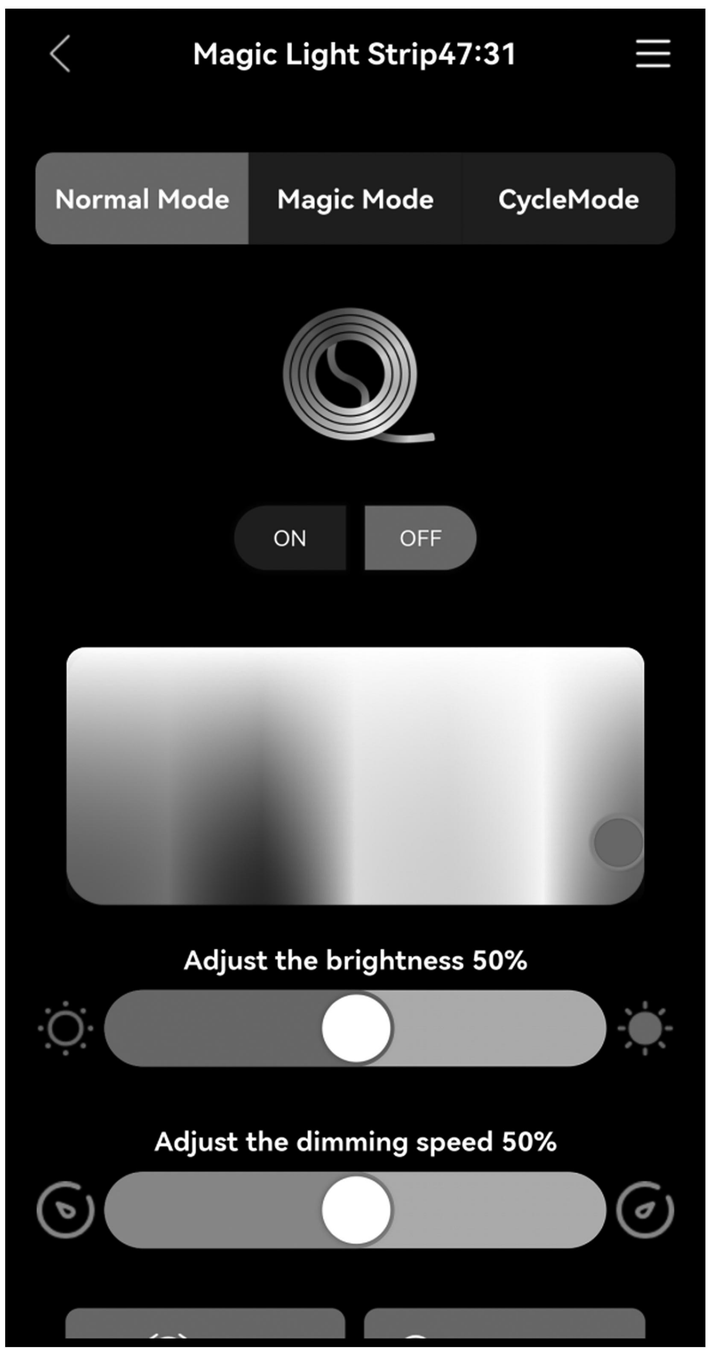

Now you can freely adjust the lighting according to your preferences

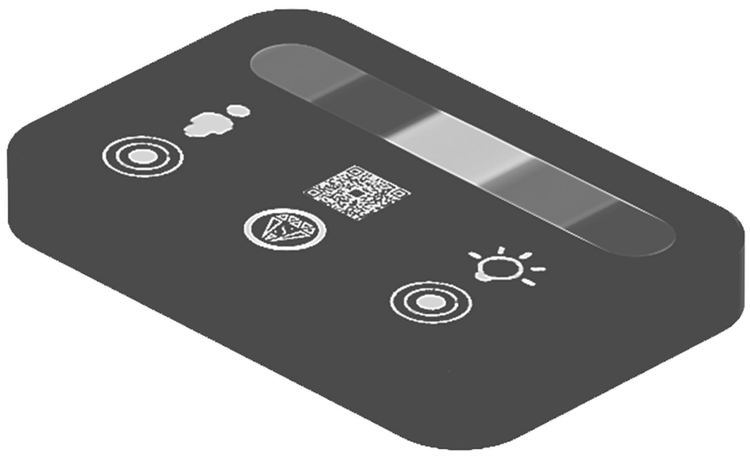

User's Guide

Thank you for purchasing this product.

To use this product, please plug it into a 12V DC power supply.

Please use if the product works normally after connecting to power.

Introduction

The box is an intelligent controller. With 4 touch buttons,

it can turn ON/OFF the light and turn ON/OFF the induction function,

change light colors, and adjust the light luminance.

The lights can be controlled through both the touch buttons and a dedicated app.

Operation

This touch button is used to turn the light on/off, adjust brightness, and switch the color of the lights.

i. Single Click: Turn the light on/off.

ii. Quick Double-Click: Switch between 7 static RGB colors.

iii. Long Press (2+ seconds): Adjust the light luminance.

This touch button is used to turn on/off the induction function.

A.touch this button once to turn on the induction function (indicator light on).

After the person leaves or remains stationary for more than 30 seconds, the light strip goes out; people and objects within a range of 1 meters move will light up the light strip.

B. Long press this button for 0.5 seconds to turn off the human body induction function(the indicator light goes out).

At this point, Keep the light strip as it was before turning off and no longer be affected by humanand object activities.

By default, induction function is enabled when powered on.

This touch button is the Dynamic Phantom Color Mode, which includes 5 magical lighting effects.

Simply tap to cycle through the options.(Attention:This mode cannot adjust the brightness)

This area controls the color switching function.

You can tap or slide to any color bar position to change the color.

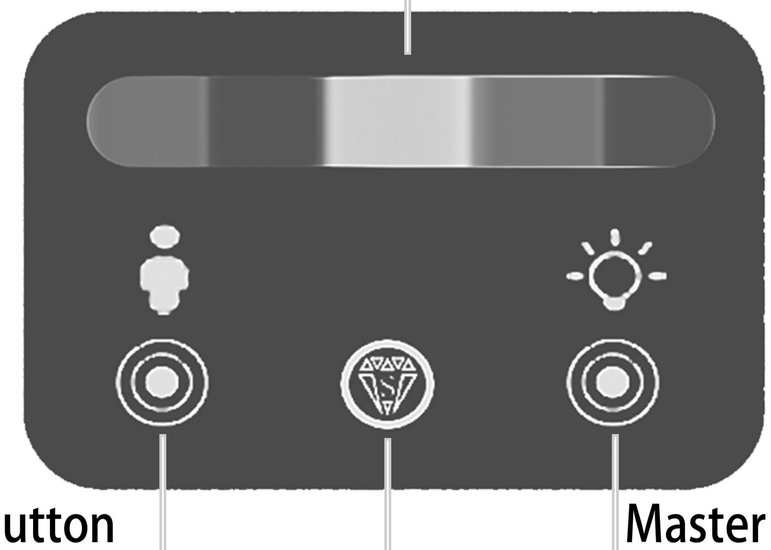

ATTENTION PLEASE

1. If there is no touch response suddenly, Re-plug the power to reset the touch static electricity.
2. If bubbles appear on the panel, remove the protective film.
3. If you have any questions when installing, please feel free to contact us. Thank you.