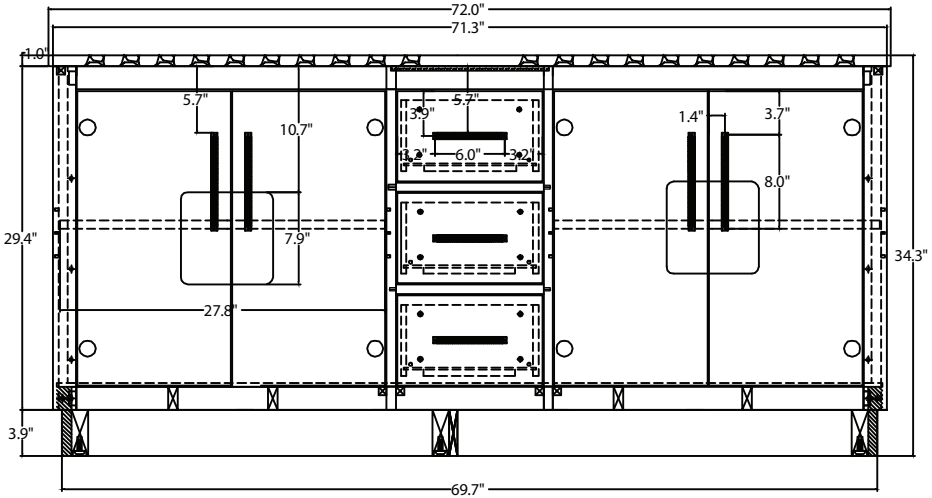
72.0"
71.3"
1.0"
5.7"
10.7"
5.7"
3.9"
1.4"
3.7"
3.2"
6.0"
3.2"
8.0"
29.4"
7.9"
34.3"
27.8"
3.9"
69.7"

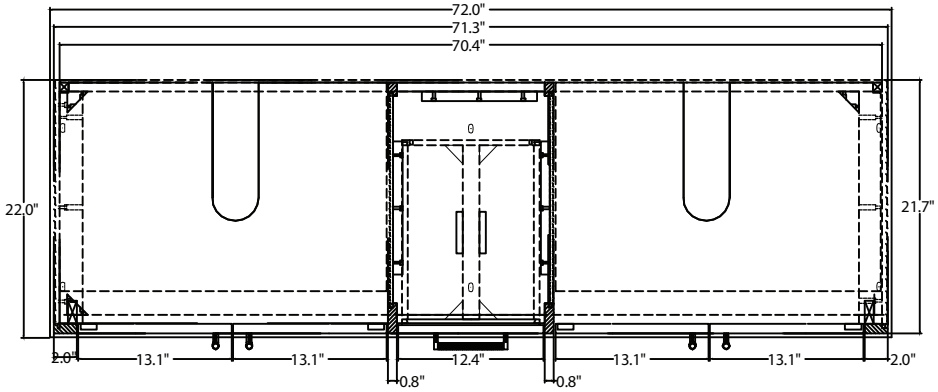
72.0"
71.3"
70.4"
22.0"
21.7"
2.0"
13.1"
13.1"
12.4"
13.1"
13.1"
2.0"
0.8"
0.8"

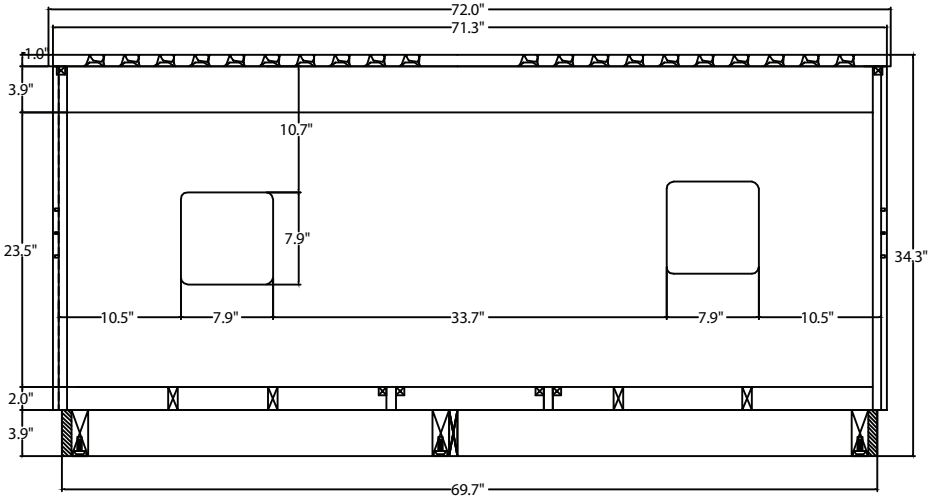
72.0"
71.3"
1.0"
3.9"
10.7"
23.5"
7.9"
34.3"
10.5"
7.9"
33.7"
7.9"
10.5"
2.0"
3.9"
69.7"

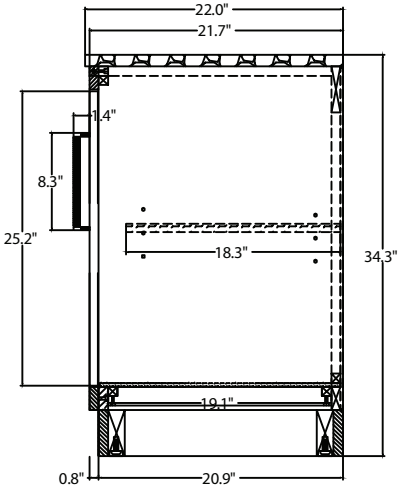
22.0"
21.7"
1.4"
8.3"
25.2"
18.3"
34.3"
19.1"
0.8"
20.9"

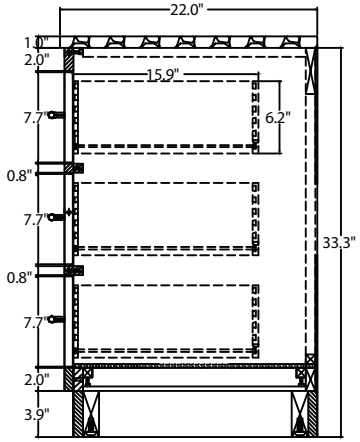
22.0"
1.0"
2.0"
15.9"
7.7"
6.2"
0.8"
7.7"
33.3"
0.8"
7.7"
2.0"
3.9"

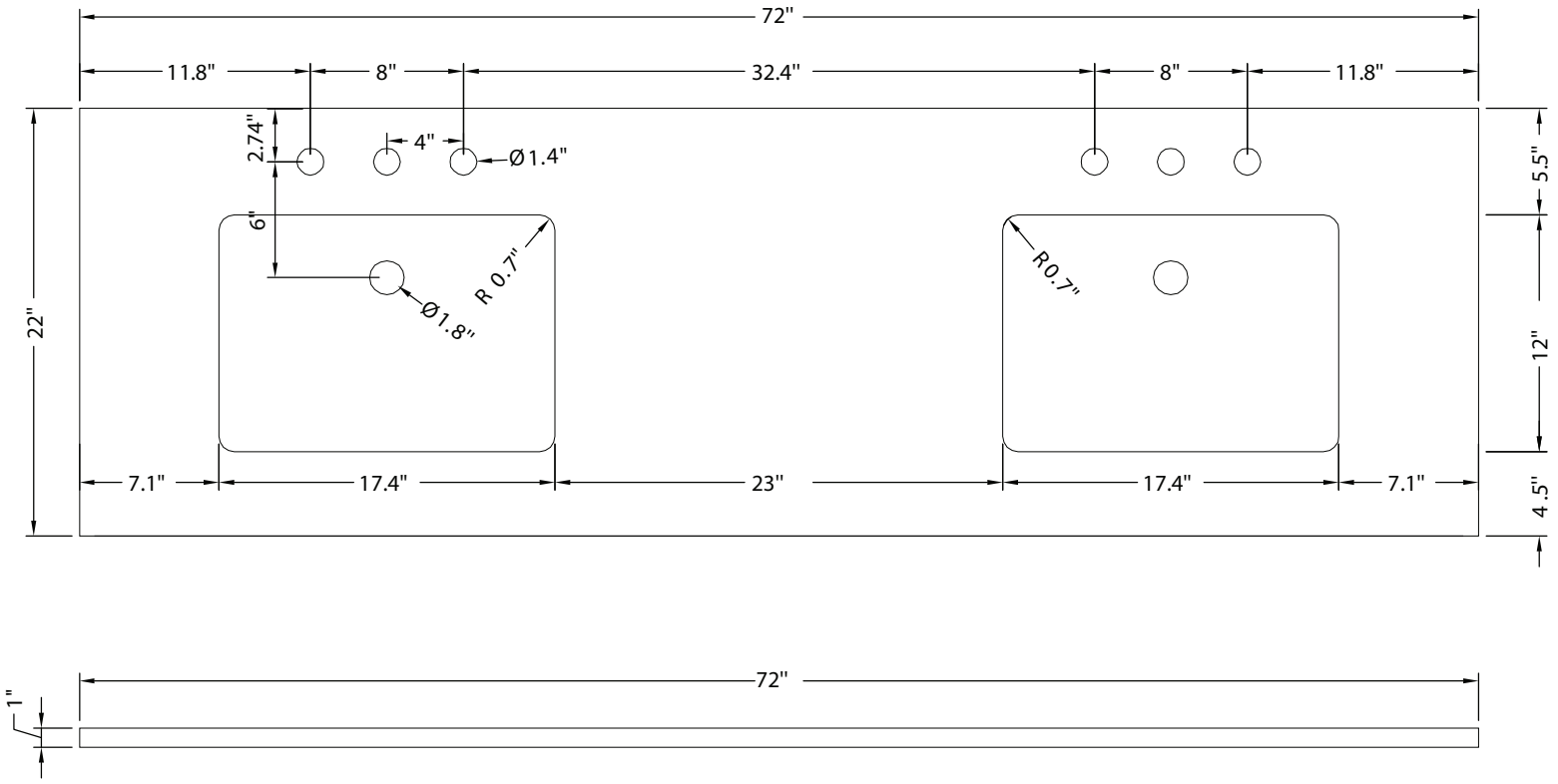
72"
11.8"
8"
32.4"
8"
11.8"
2.74"
4"
Ø1.4"
6"
R 0.7"
Ø1.8"
R0.7"
22"
5.5"
12"
4.5"
7.1"
17.4"
23"
17.4"
7.1"
72"
1"

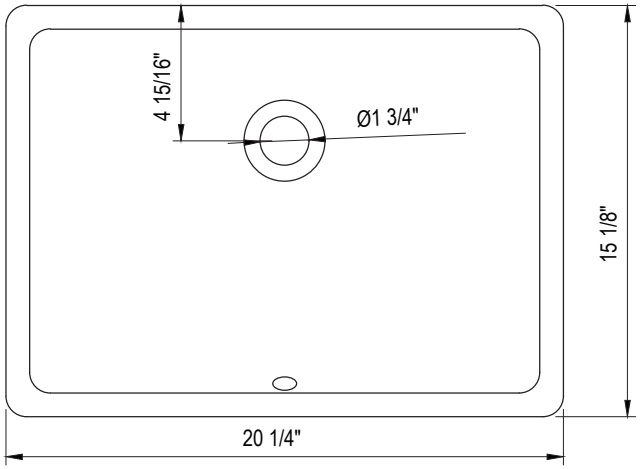
4 15/16"
Ø1 3/4"
15 1/8"
20 1/4"

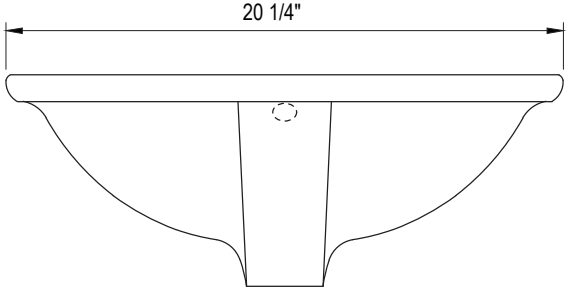
20 1/4"

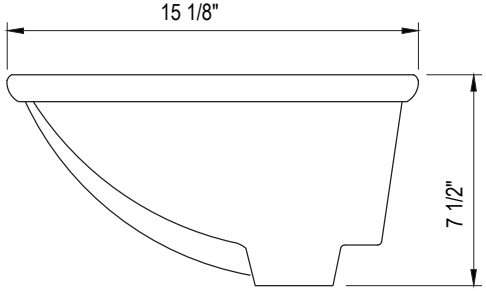
15 1/8"
7 1/2"

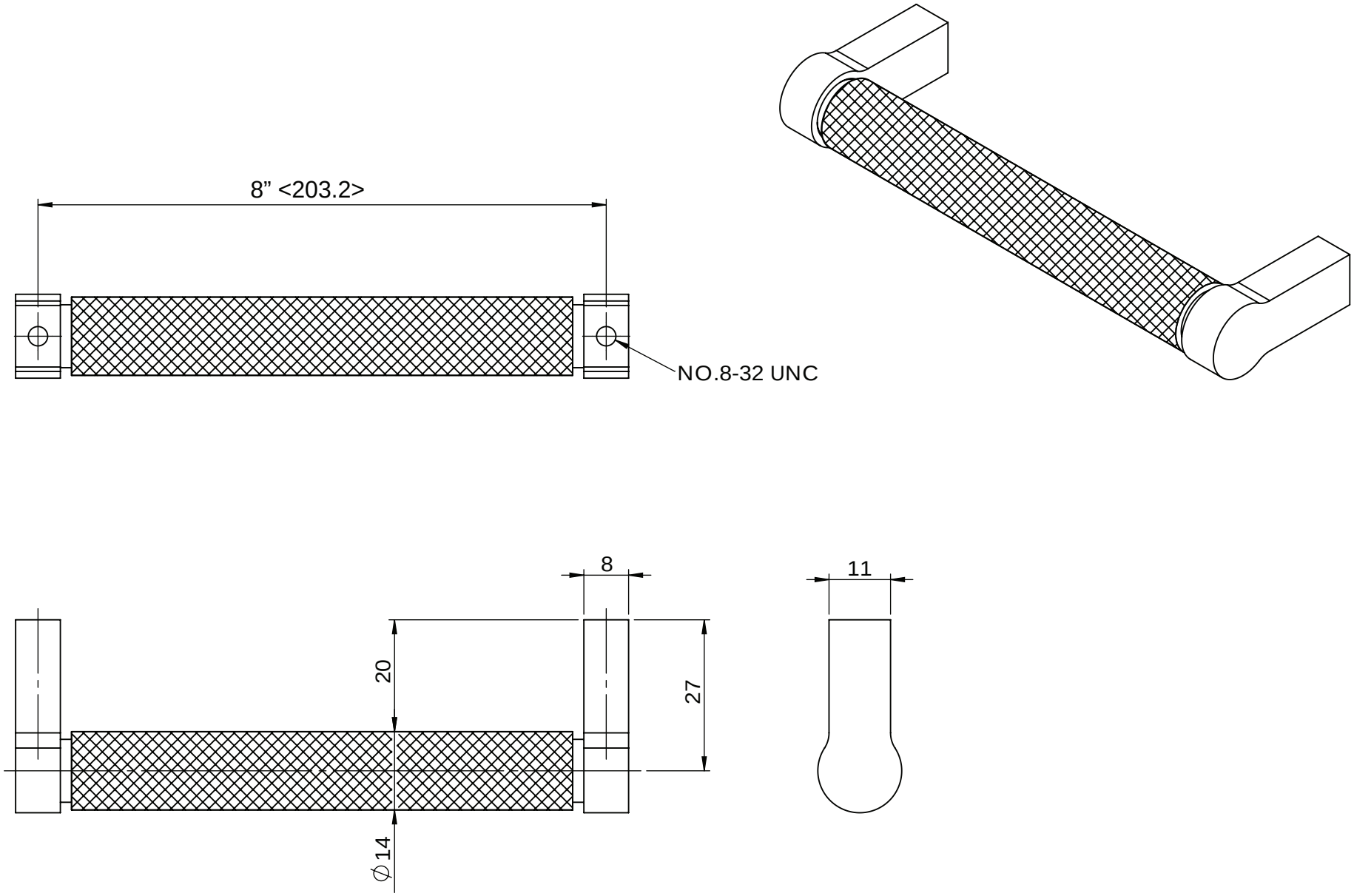
8” <203.2>
NO.8-32 UNC
8
11
20
27
Ø14

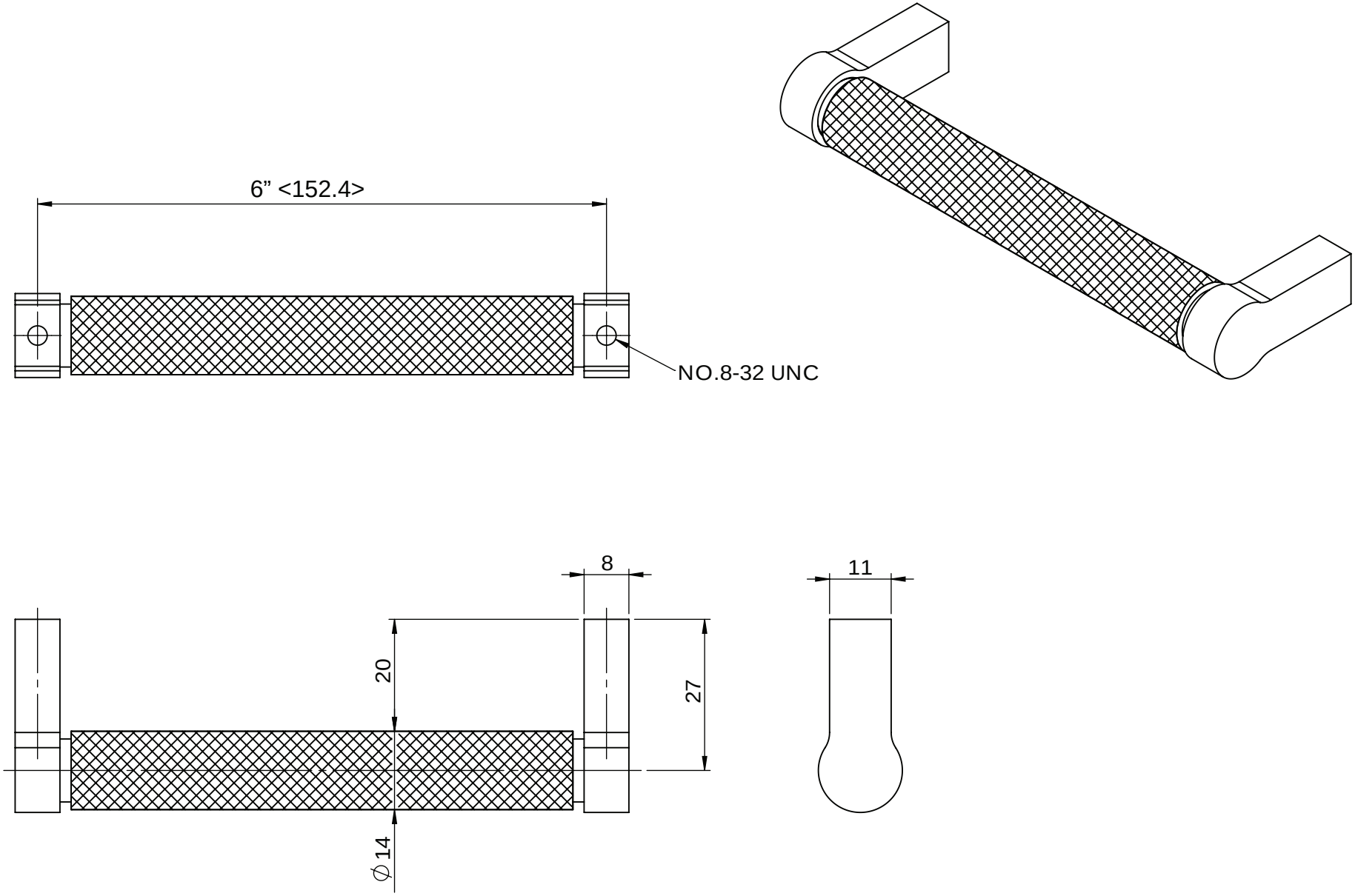
6” <152.4>
NO.8-32 UNC
8
11
20
27
∅14

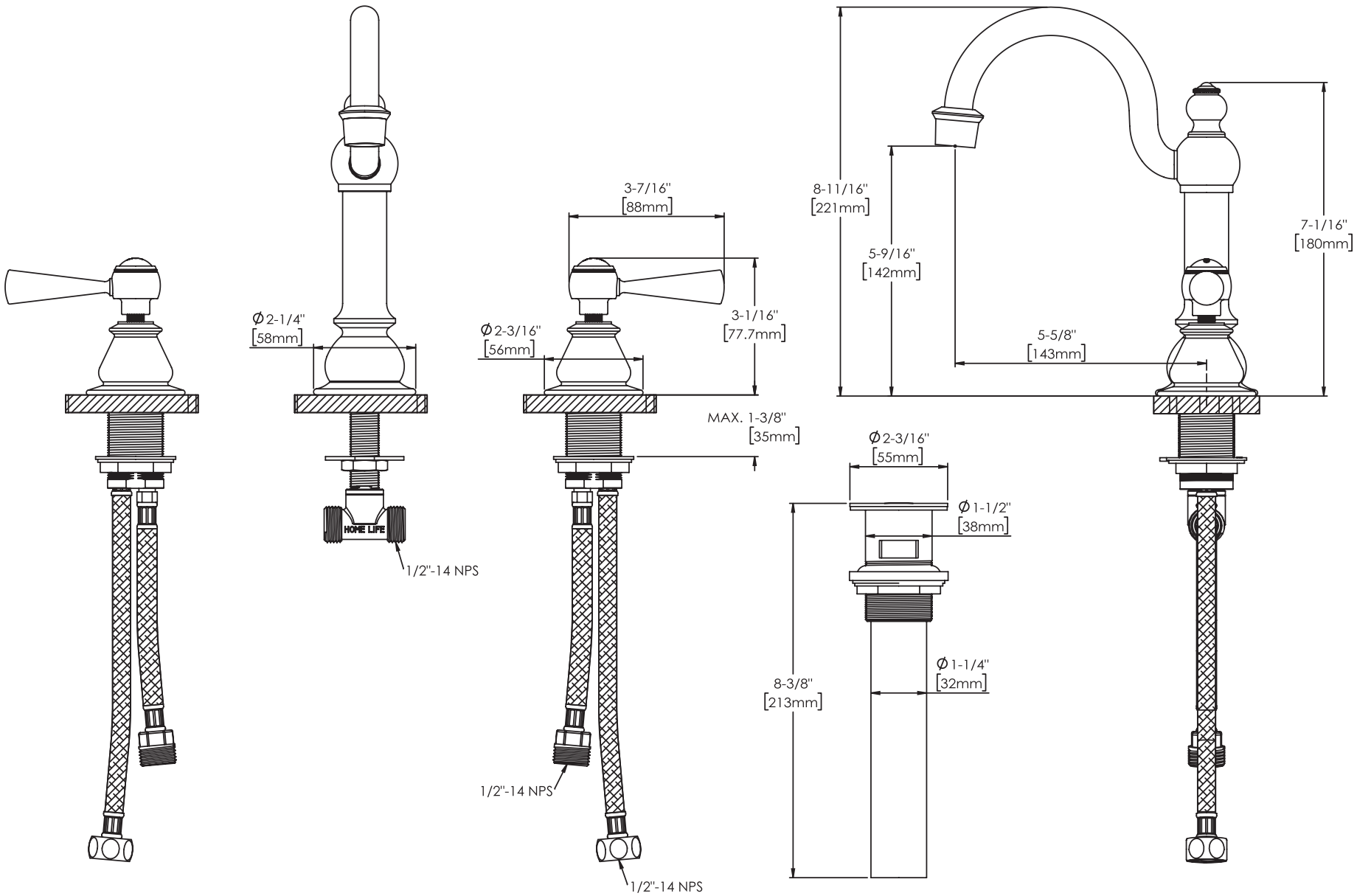
Ø2-1/4"
[58mm]
HOME LIFE
1/2"-14 NPS
3-7/16"
[88mm]
Ø2-3/16"
[56mm]
3-1/16"
[77.7mm]
MAX. 1-3/8"
[35mm]
1/2"-14 NPS
1/2"-14 NPS
8-11/16"
[221mm]
5-9/16"
[142mm]
5-5/8"
[143mm]
7-1/16"
[180mm]
Ø2-3/16"
[55mm]
Ø1-1/2"
[38mm]
Ø1-1/4"
[32mm]
8-3/8"
[213mm]

2024-12-19