WQG101---->12X20FT

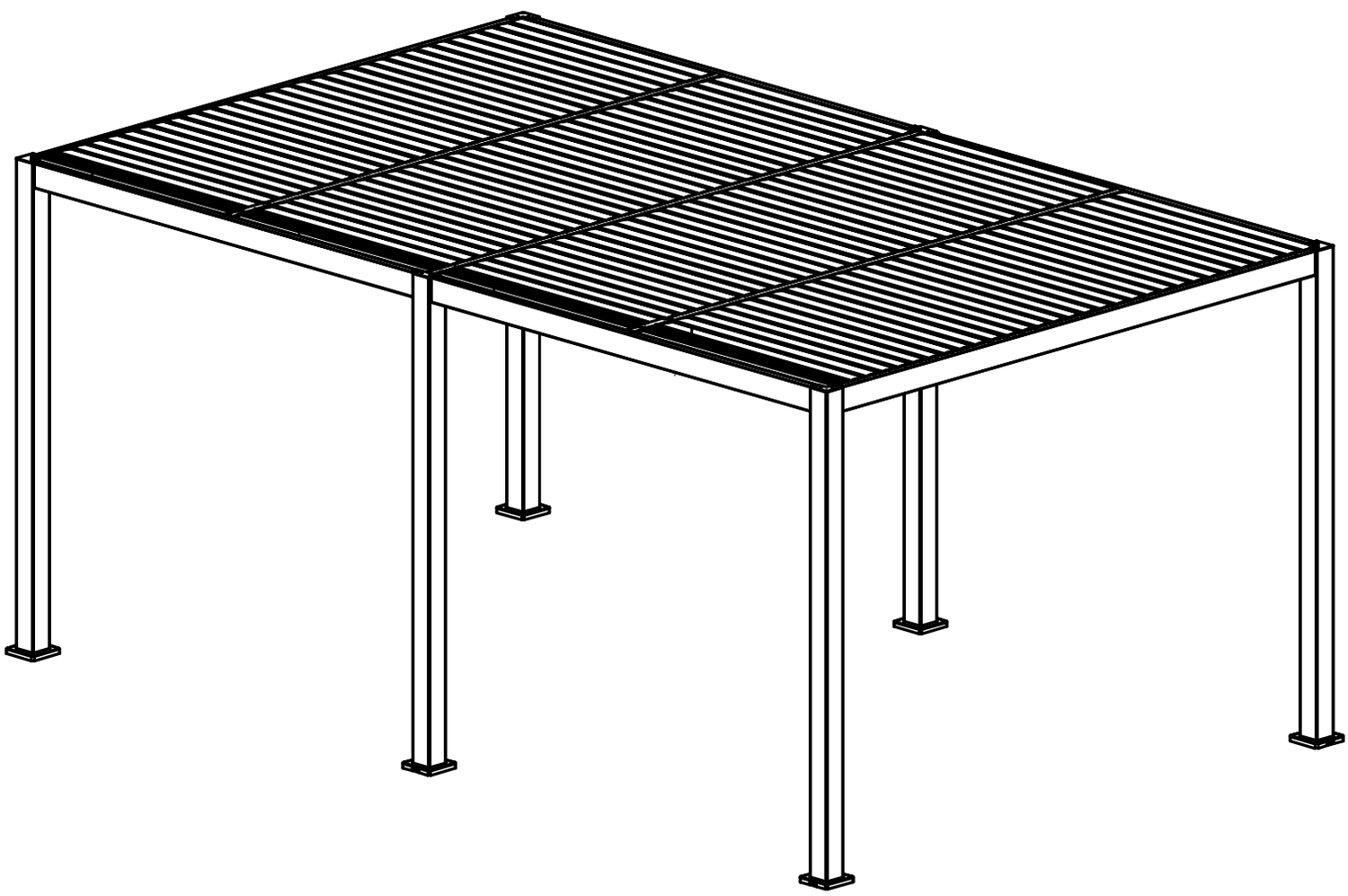

12X20FT
Louvered Pergola

Installation instructions

PRODUCT INSTRUCTION

Remember that the assembly might take (3) hours and requires (4) people.

Before You Begin

①Before starting assembly, please carefully inspect all parts in the package.
If you notice any damage, missing parts, or discrepancies, please contact us for assistance.
②Please note that we are not responsible for parts lost or damaged due to improper handling during assembly.

Preparation Is Key

①Confirm that your site preparation and foundation are fully ready before unpacking.
②Review all steps in this manual thoroughly before beginning.
③Consult local authorities regarding permits and building regulations.

Safety First

①Some parts have sharp metal edges — handle with care.
②Wear gloves, eye protection, and long sleeves during assembly or maintenance.
③Do not assemble in strong winds or extreme cold.
④Once installed, place heavier items near the bottom when filling.
⑤Do not allow children to play in the unit, and do not stand, sit, or store items on the roof.

Our Promise to You

①Inspired by the idea of “ Closer to life, ” we strive to provide well-designed, reliable products that enhance your outdoor living. Our goal is to help you connect with nature and enrich your lifestyle.②Here ’ s to creating your own outdoor sanctuary !

Need Help ?

If you have any questions during assembly, please reach out to our customer service team.

Installation Notes

- Refer to the provided diagram during assembly.
- These following tools are required but not included

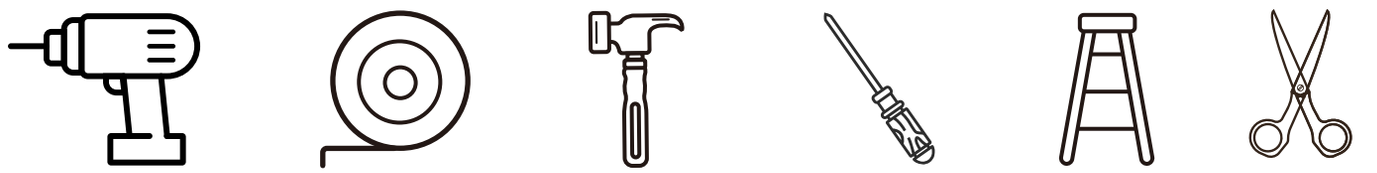

Power Drill | Tape Measure | Hammer | Screwdriver | Ladder | Scissors

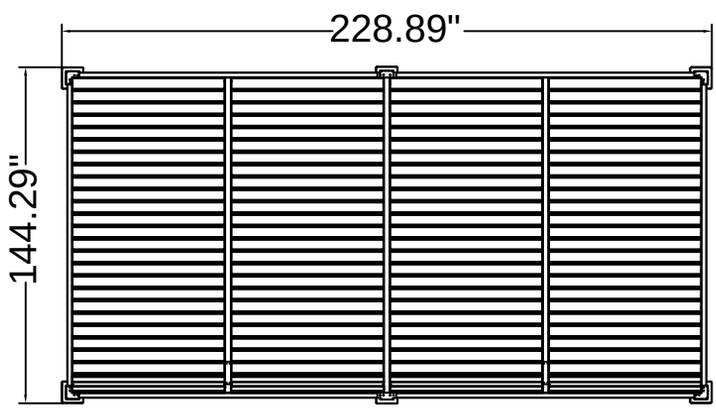

Top

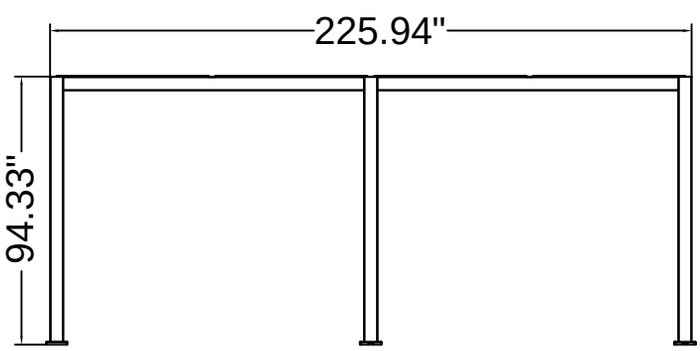

Front

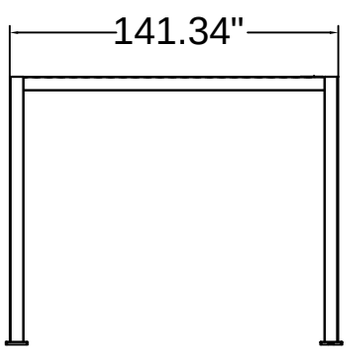

Left

ACCESSORIES LIST Serial number

Box A

Part name	A	A1	A2	A3	O	O1	N
Qty	2	1	2	1	6	6	6

Part name	N1	N2	P	P1	Q	
Qty	4	2	2	2	1	

Box B

Part name	E	E1	F	F1	1#	2#	3#
Qty	1	1	1	1	90	8	26

Part name	4#	9#	
Qty	10	24	

Box C

Part name	B	C	D	D1	
Qty	1	1	1	2	

Box D

Part name	H	
Qty	42	

Box E

Part name	H	G	G1	
Qty	39	1	1	

ACCESSORIES LIST Serial number

Box F

Part name	H	G	G2	
Qty	39	1	1	

Box G

Part name	X2	X4	Y	Y1	Y2	Z	Z1
Qty	1	1	4	4	4	2	12
Part name	Z2	Z3					
Qty	4	12					

Box H

Part name	X5	X8	Y	Y1	Y2	Z	Z1
Qty	1	1	4	4	4	2	12
Part name	Z2	Z3					
Qty	4	12					

Box I

Part name	X3	X7	Y	Y1	Y2	Z	Z1
Qty	1	1	4	4	4	2	12
Part name	Z2	Z3					
Qty	4	12					

ACCESSORIES LIST Figure style

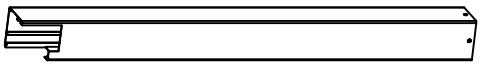

A×2

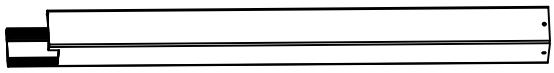

A2×2

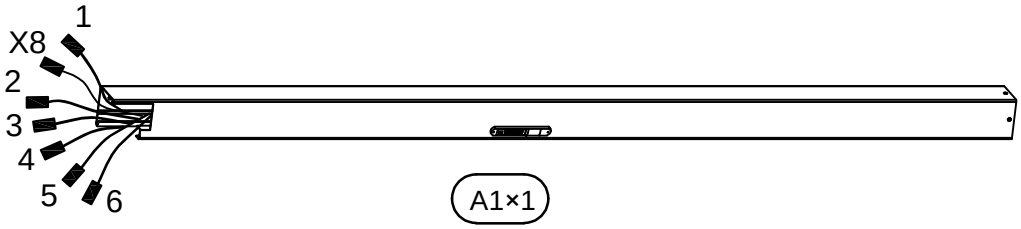

A1×1

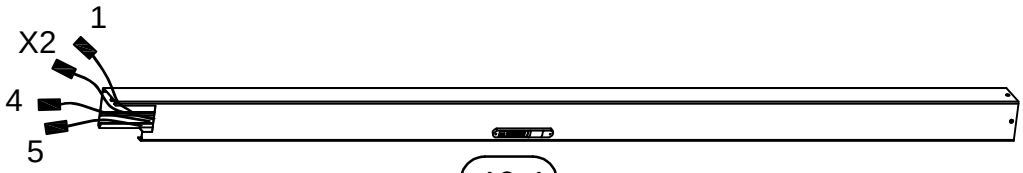

A3×1

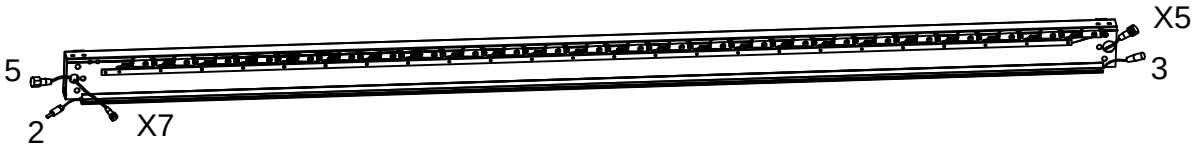

B×1

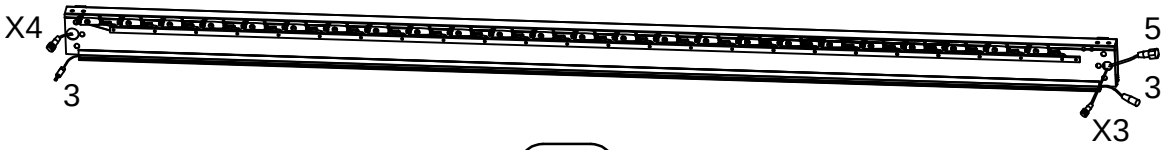

C×1

D×1

D1×2

ACCESSORIES LIST Figure style

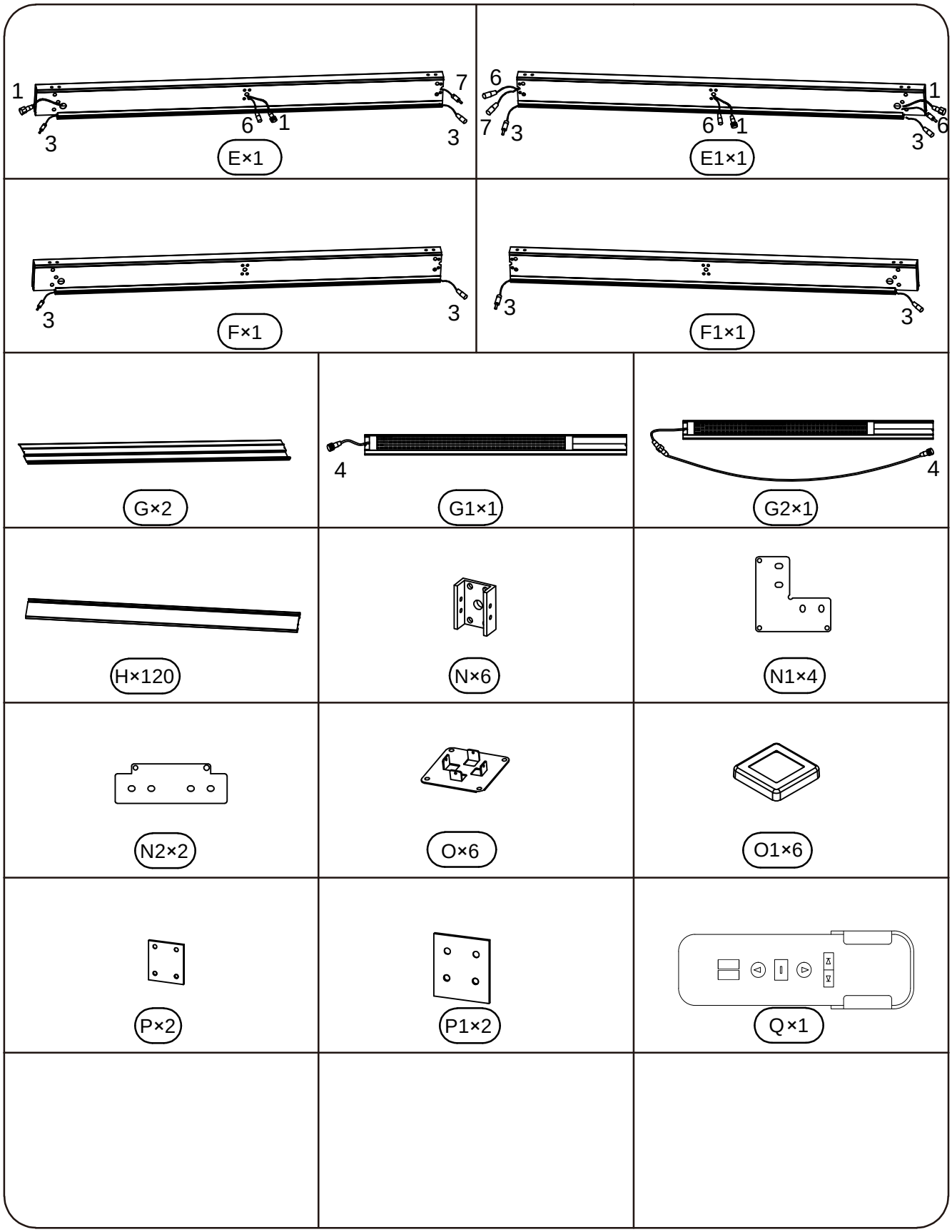

ACCESSORIES LIST Figure style

M6*15 1#×88+2	M8x53 2#×8	M6*15 3#×24+2
M4*12 4#×8+2	8x50 9#×24	6mm
4mm		

ACCESSORIES LIST Figure style

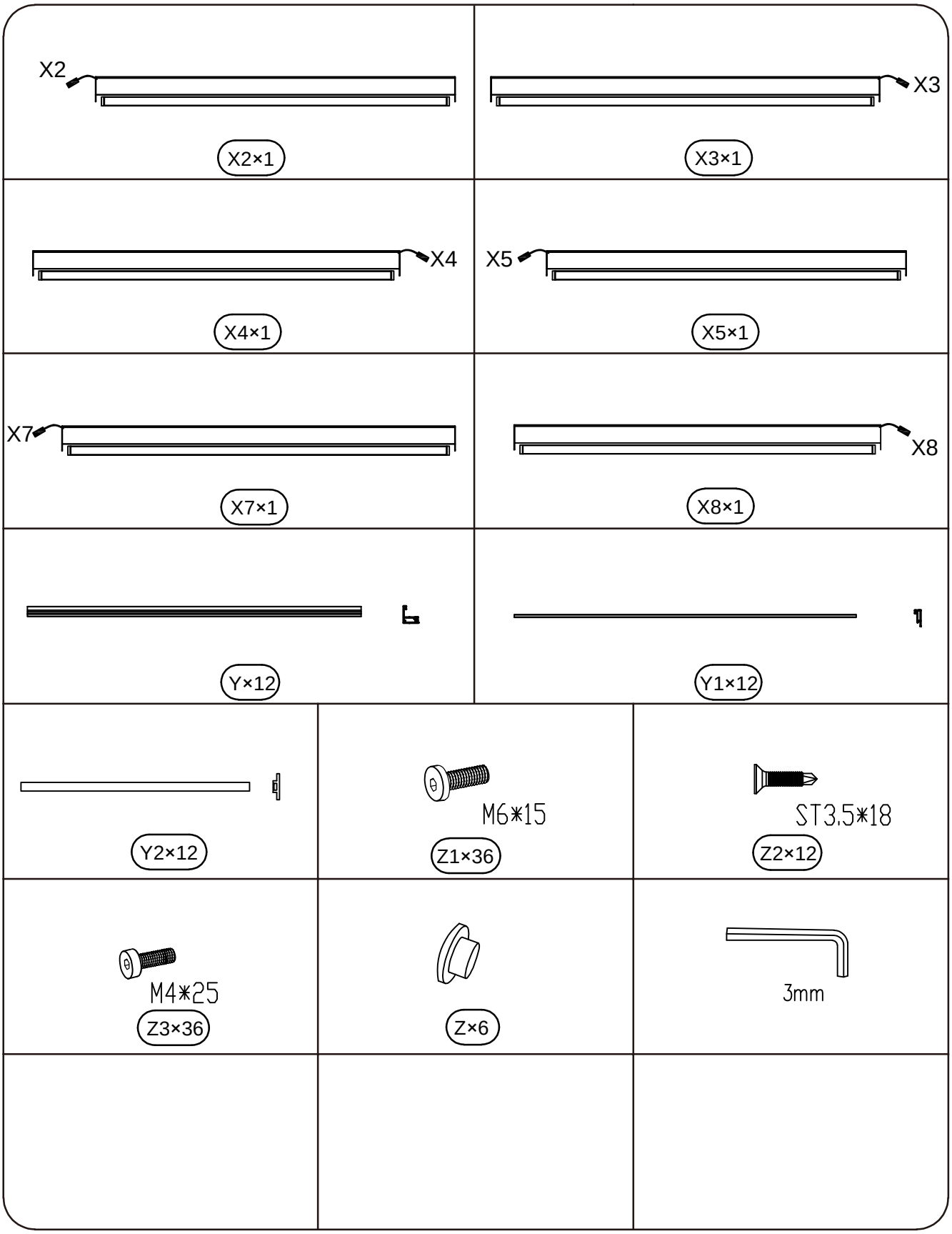

ASSEMBLY STEP 1

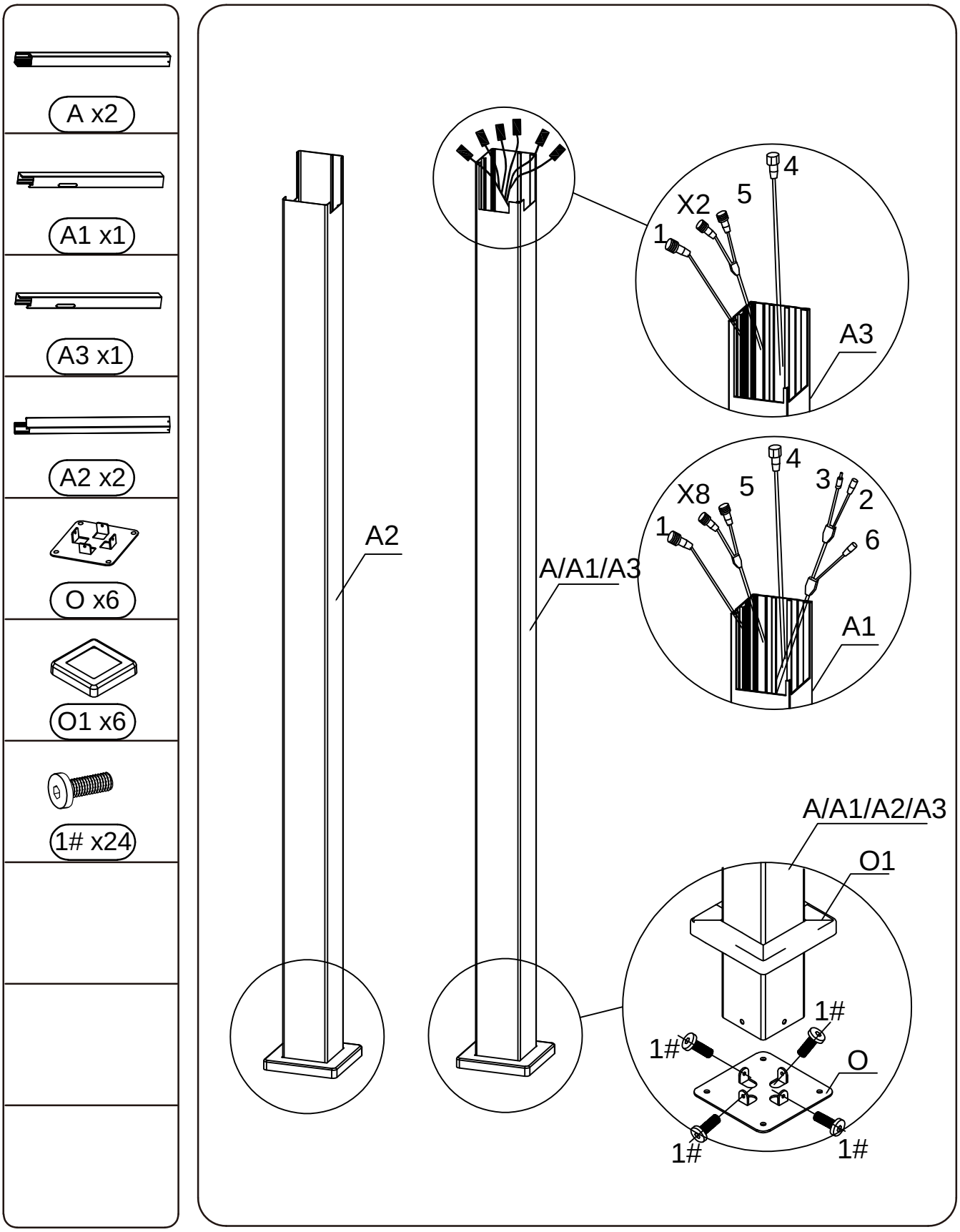

ASSEMBLY STEP 2

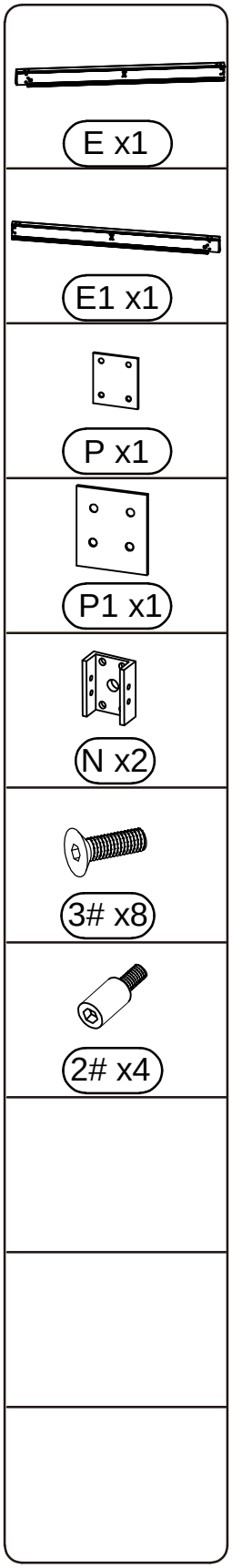

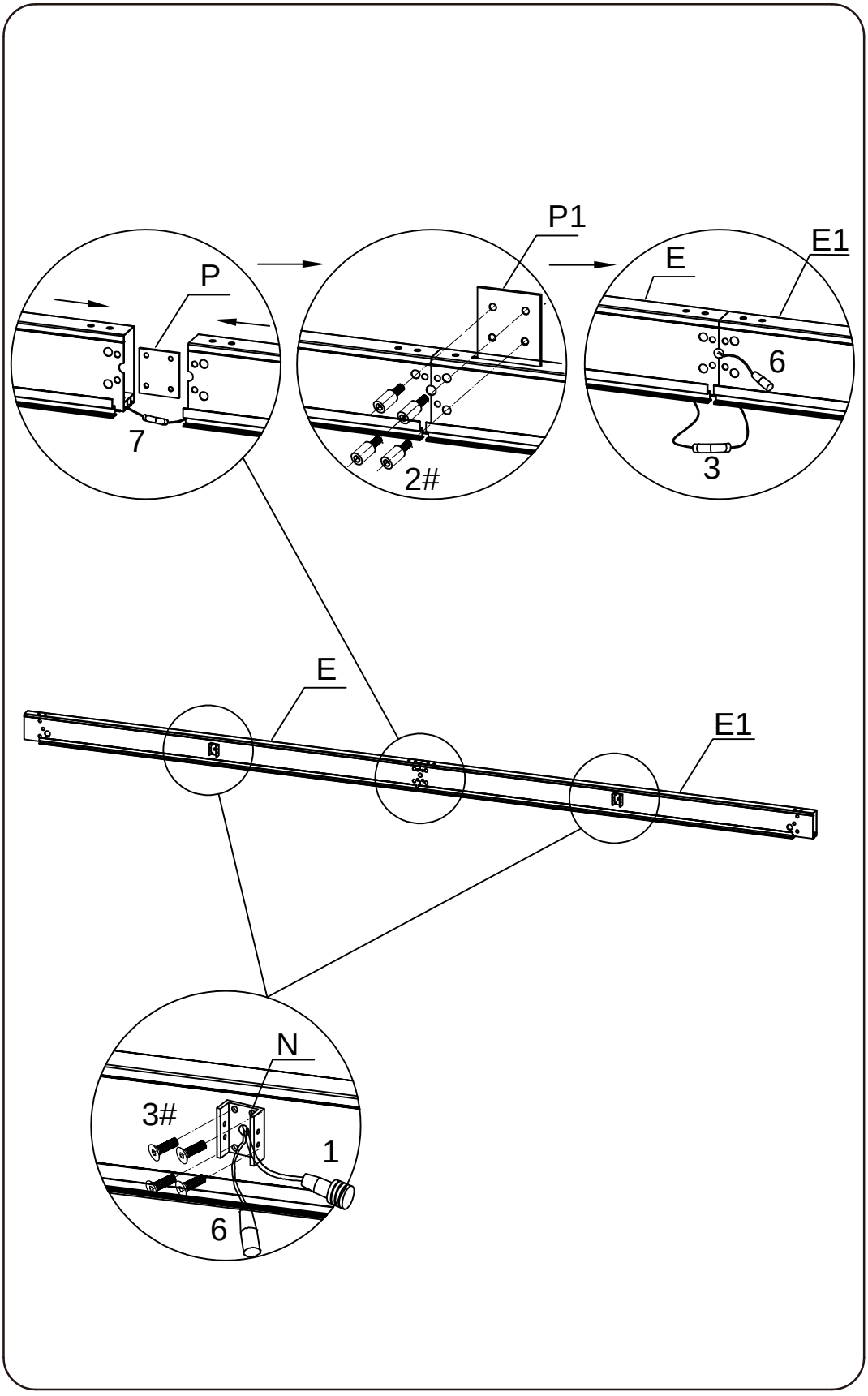

ASSEMBLY STEP 3

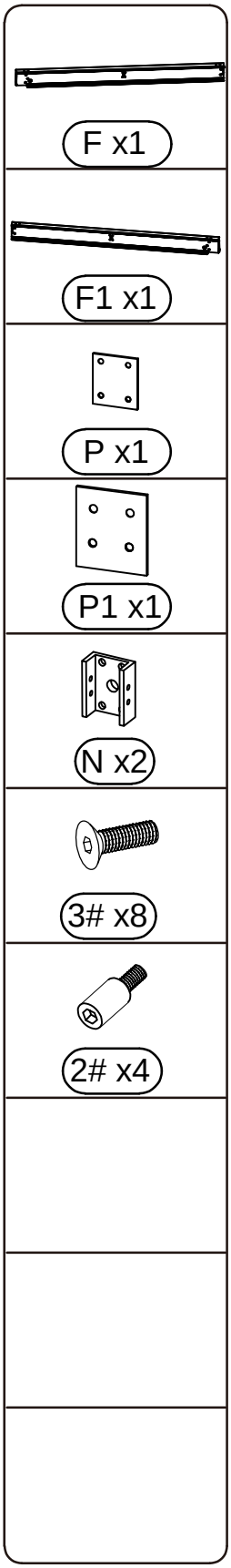

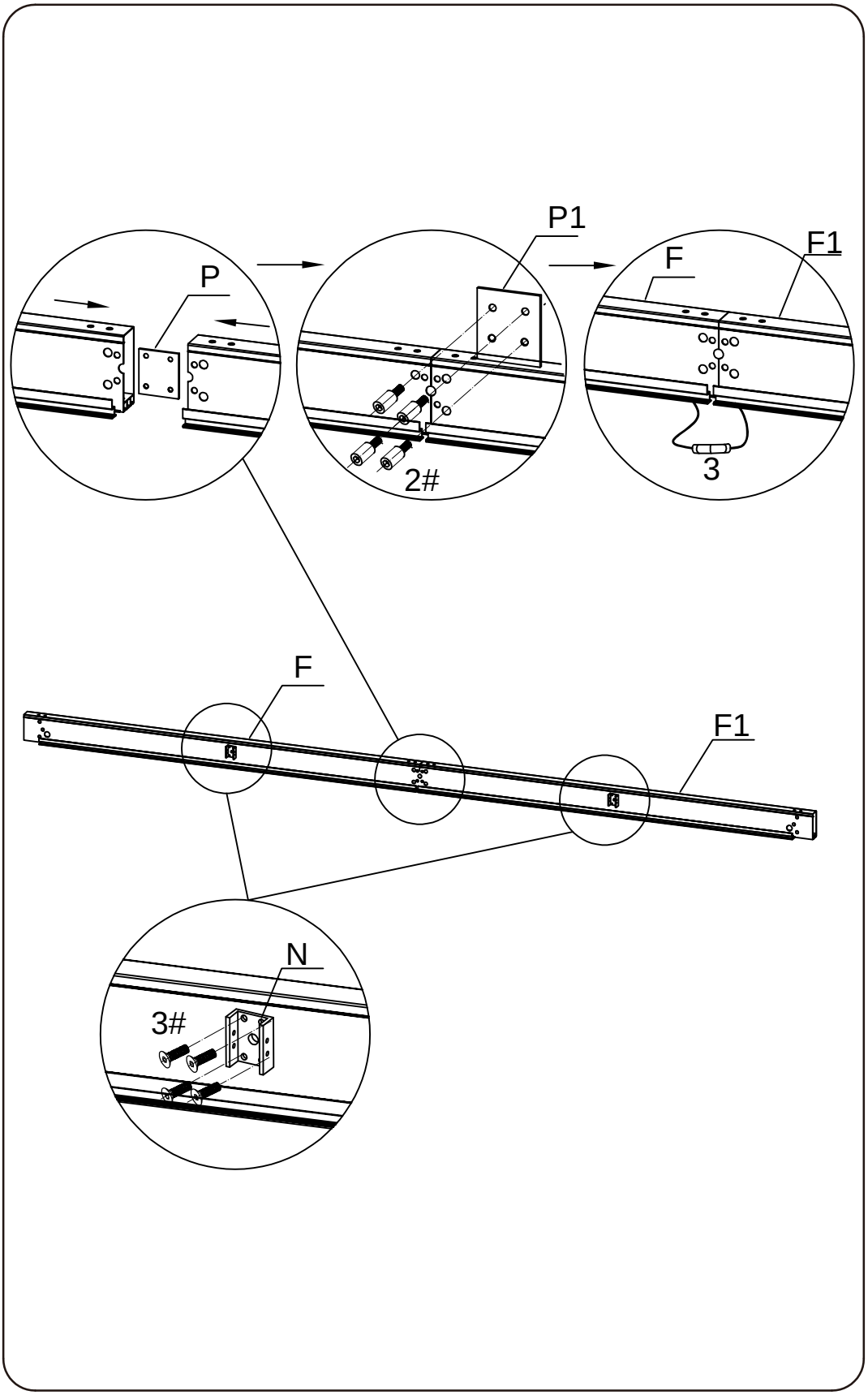

ASSEMBLY STEP 4

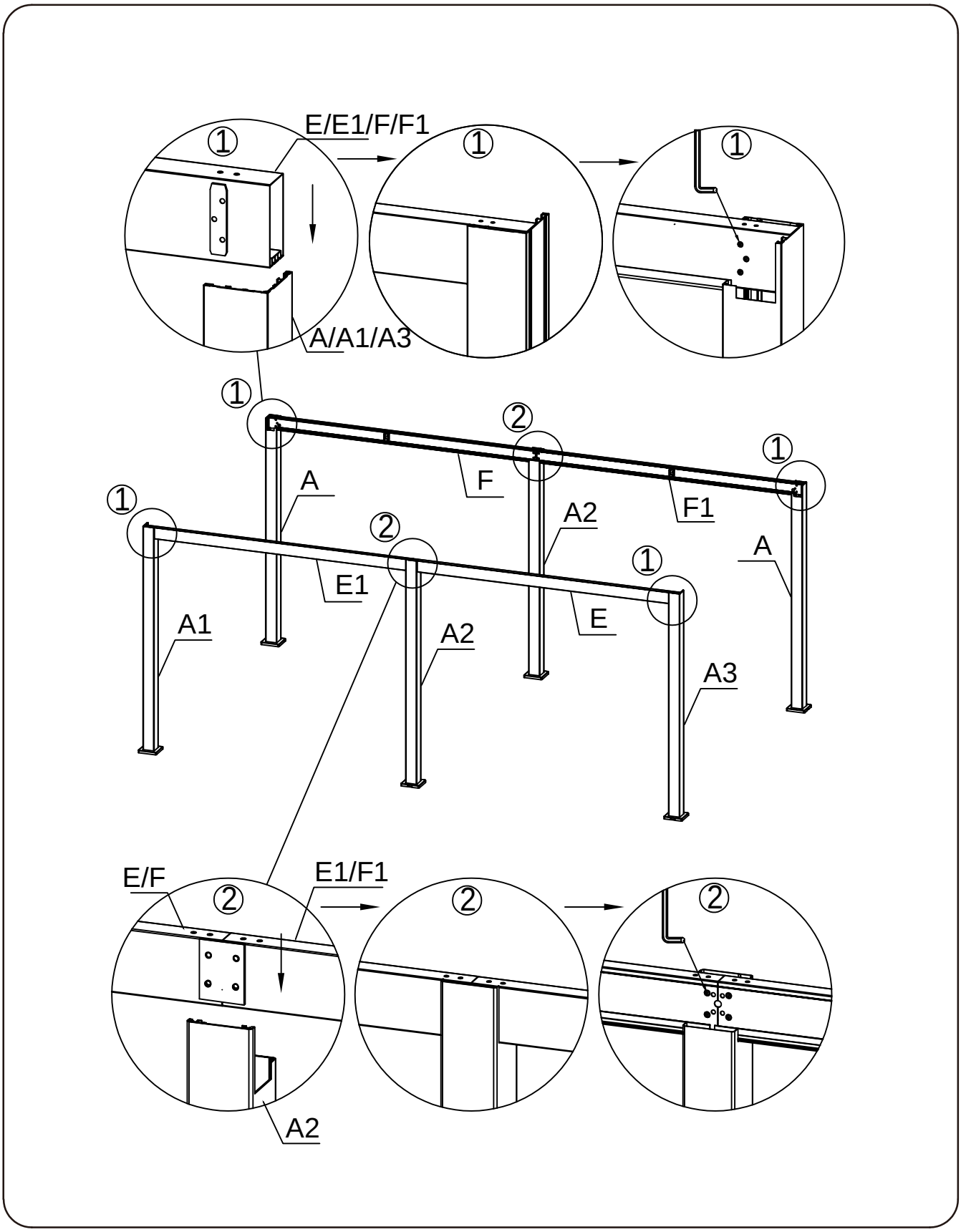

ASSEMBLY STEP 5

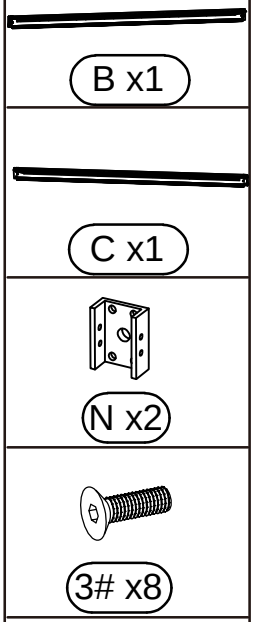

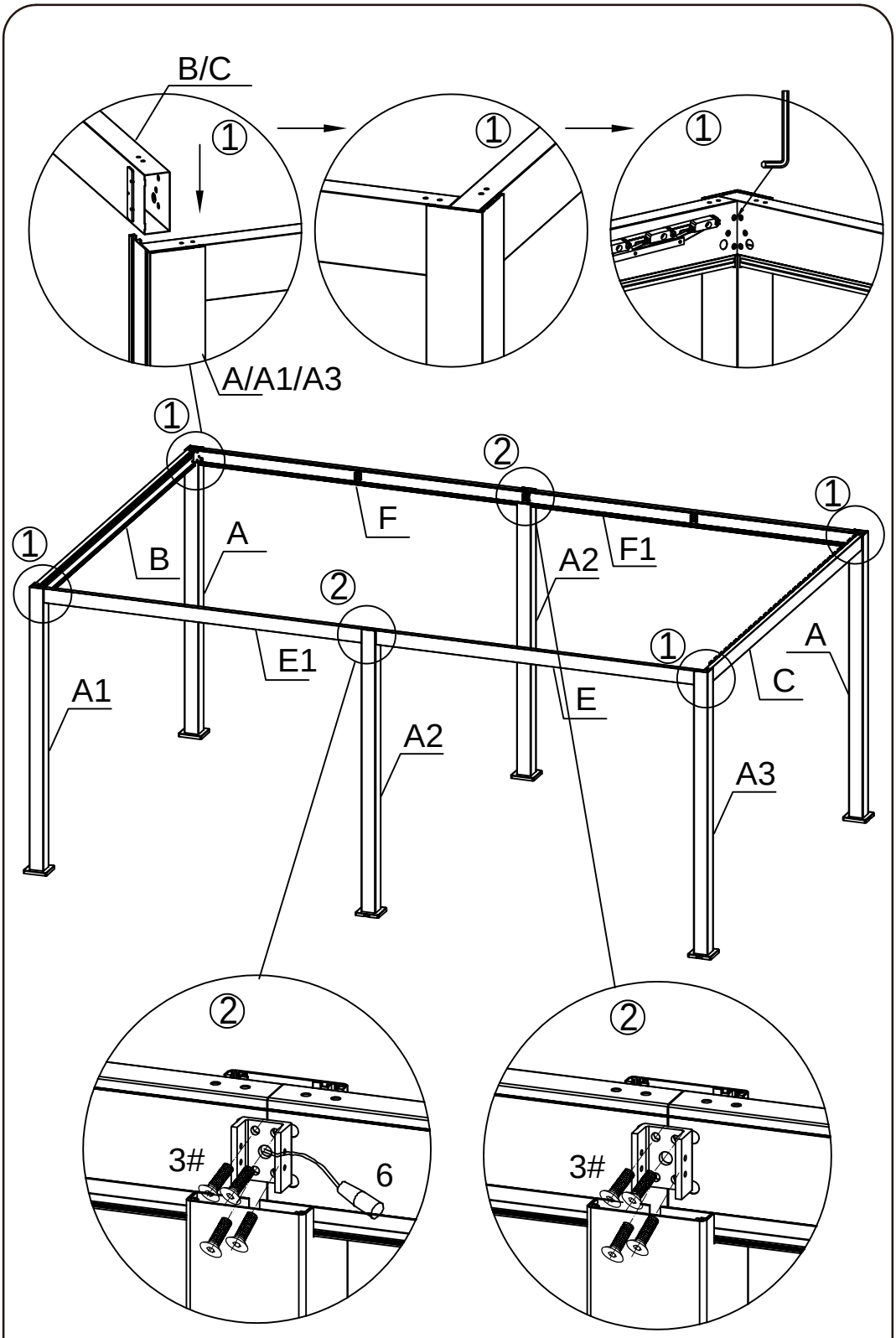

ASSEMBLY STEP 6

D1 x2

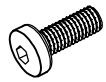

1# x16

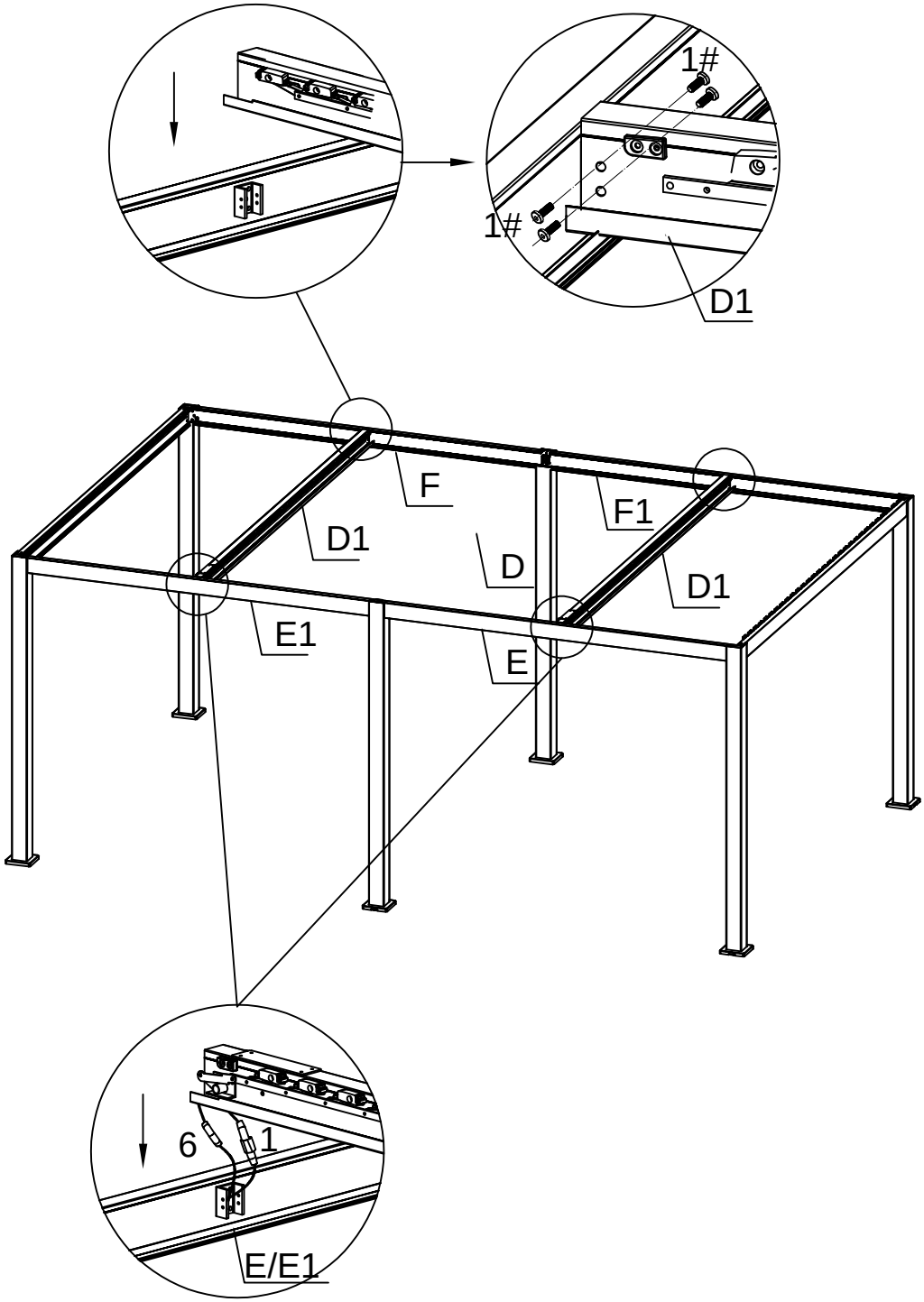

ASSEMBLY STEP 7

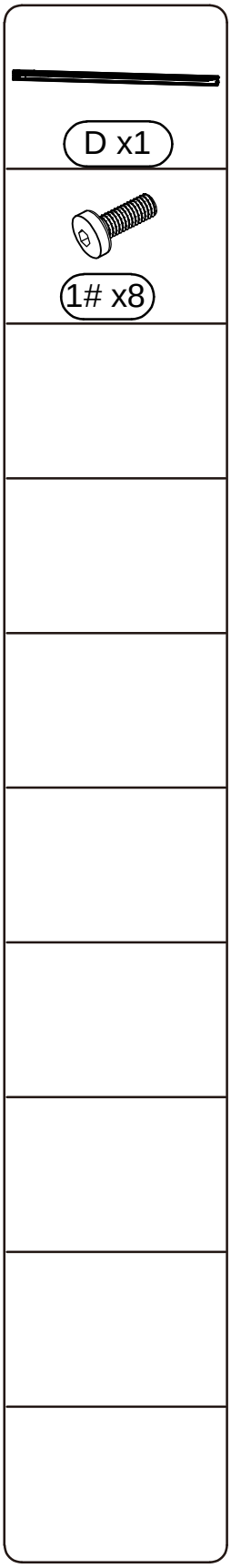

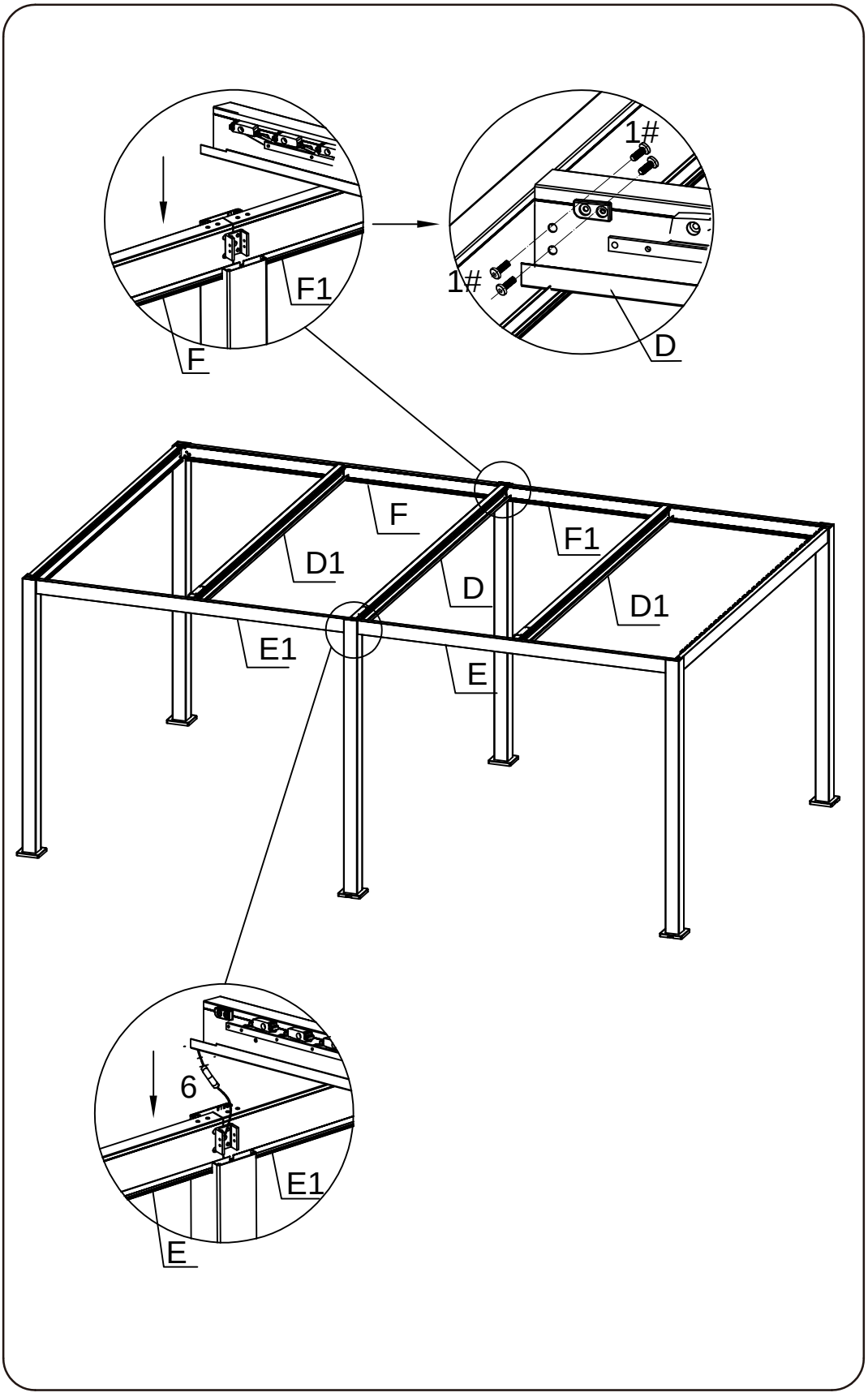

ASSEMBLY STEP 8

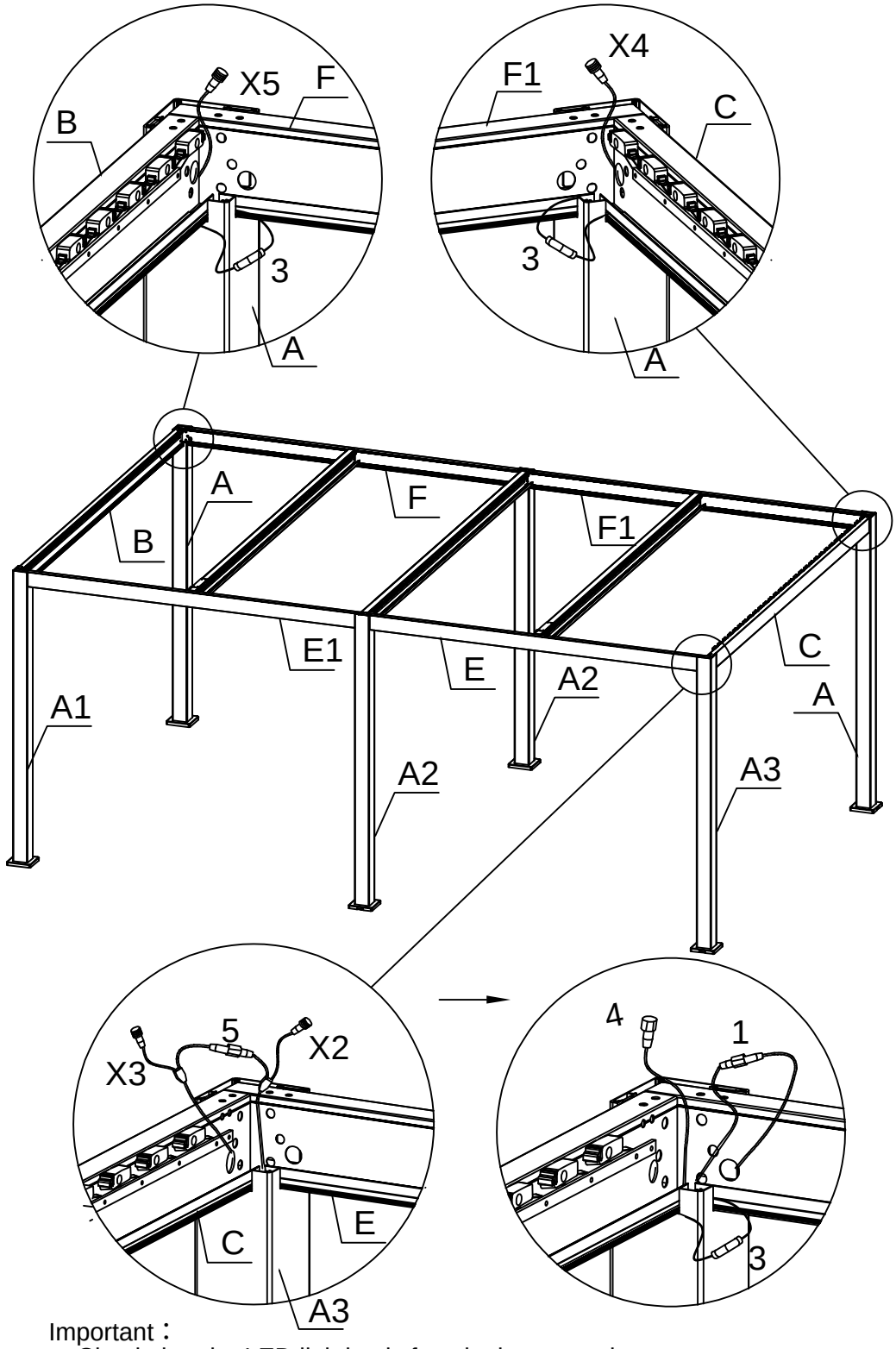

Important：
a. Check that the LED lighting is functioning properly.
b. Conceal the cables inside the foot. First insert the black plastic relay housing into Y, then connect the remaining cables. Keep cable #4 exposed.

ASSEMBLY STEP 9

Important：
a. Check that the LED lighting is functioning properly.
b. Conceal the cables inside the foot. First insert the black plastic relay housing into Y, then connect the remaining cables. Keep cable #4 exposed.

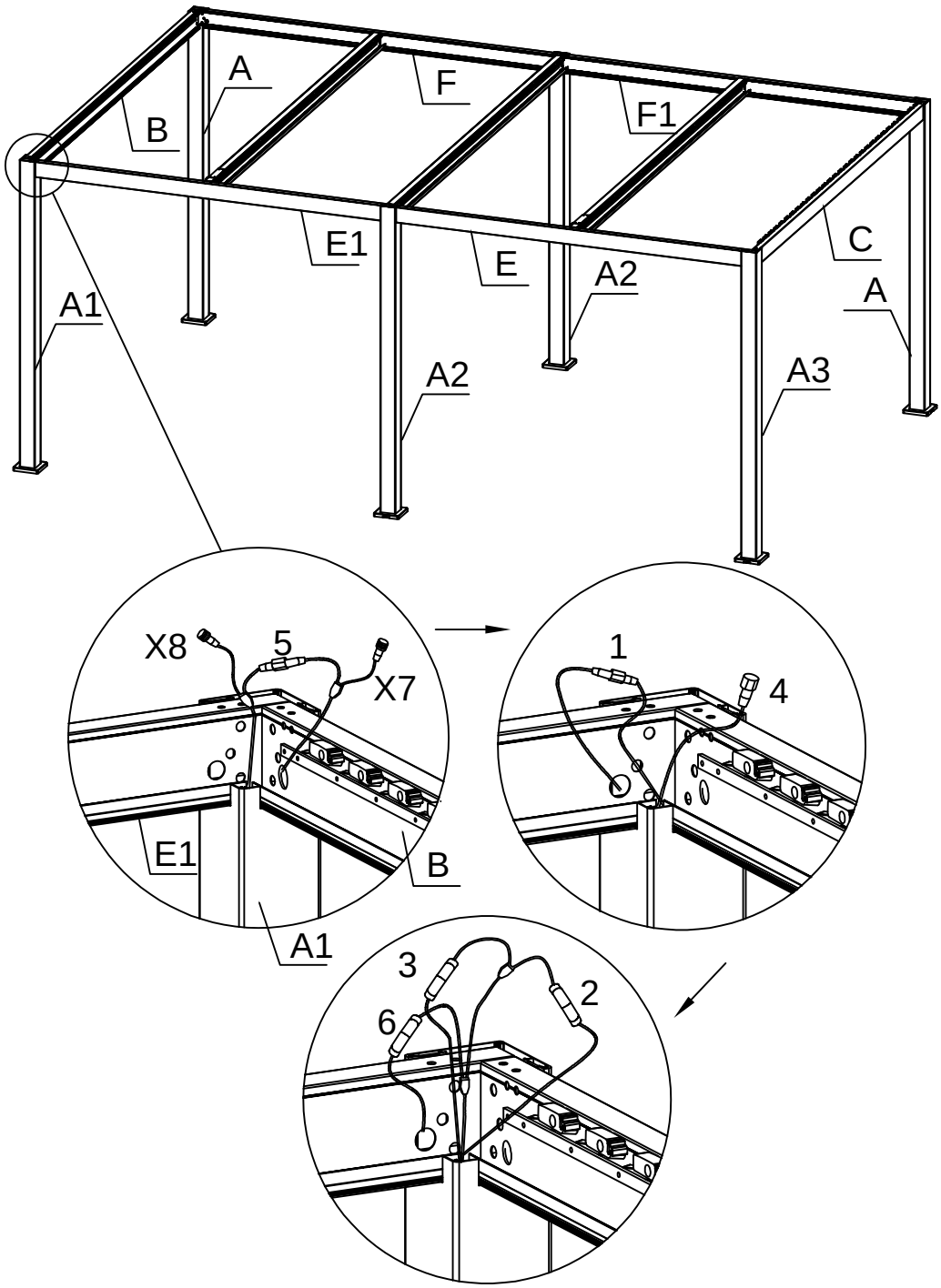

ASSEMBLY STEP 10

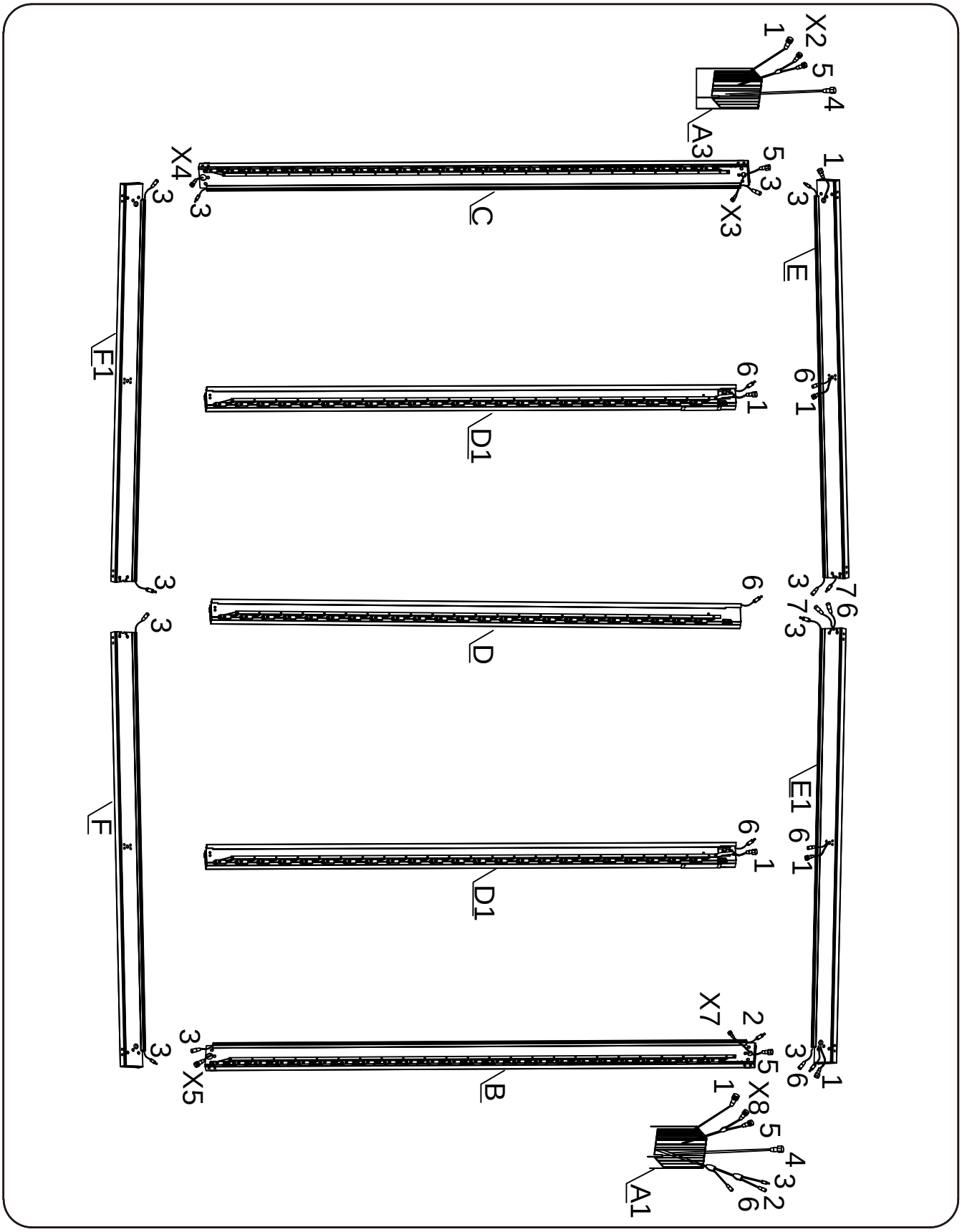

ASSEMBLY STEP 11

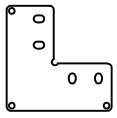

N1 x4

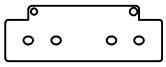

N2 x2

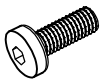

1# x40

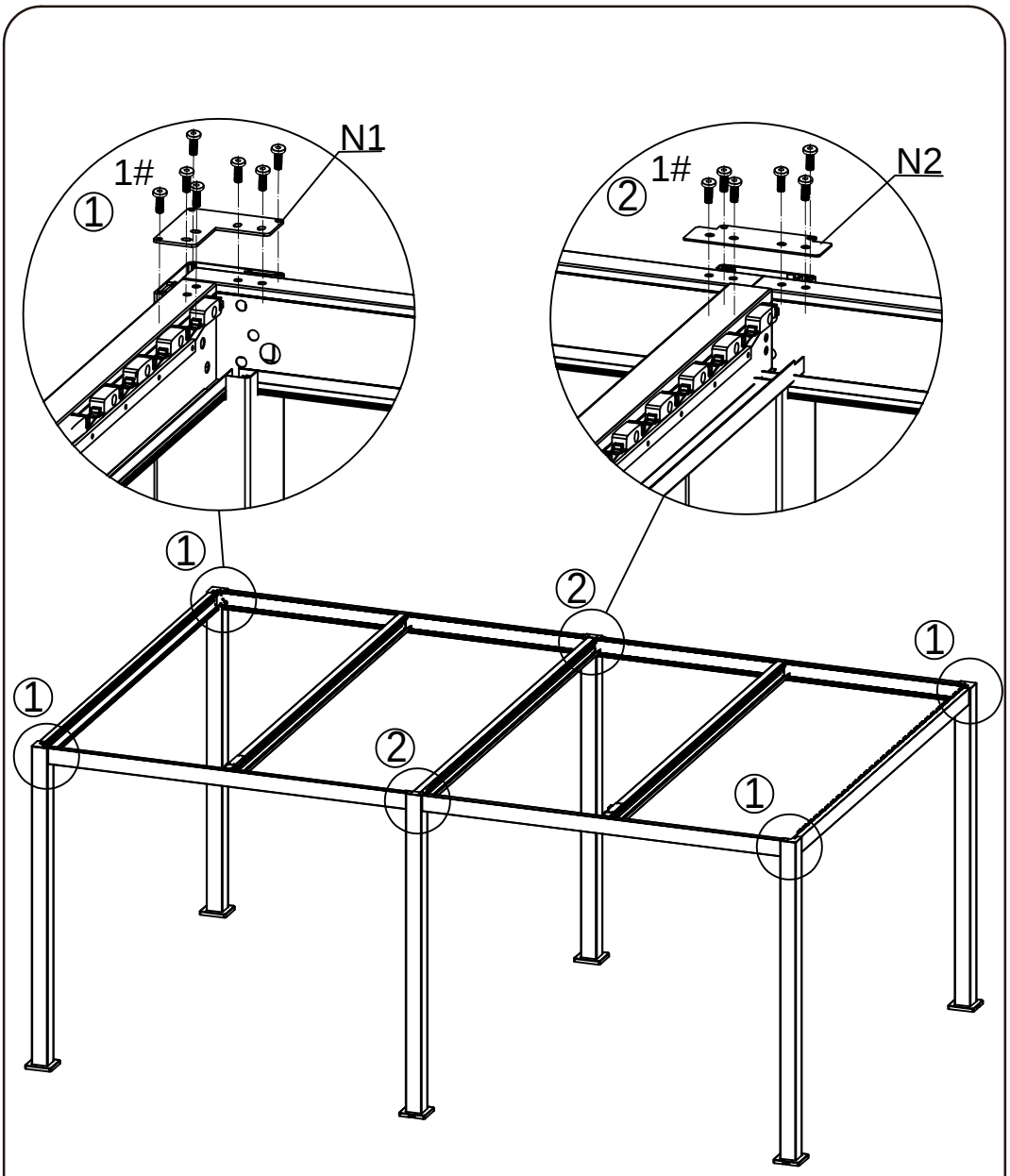

ASSEMBLY STEP 12

H x120

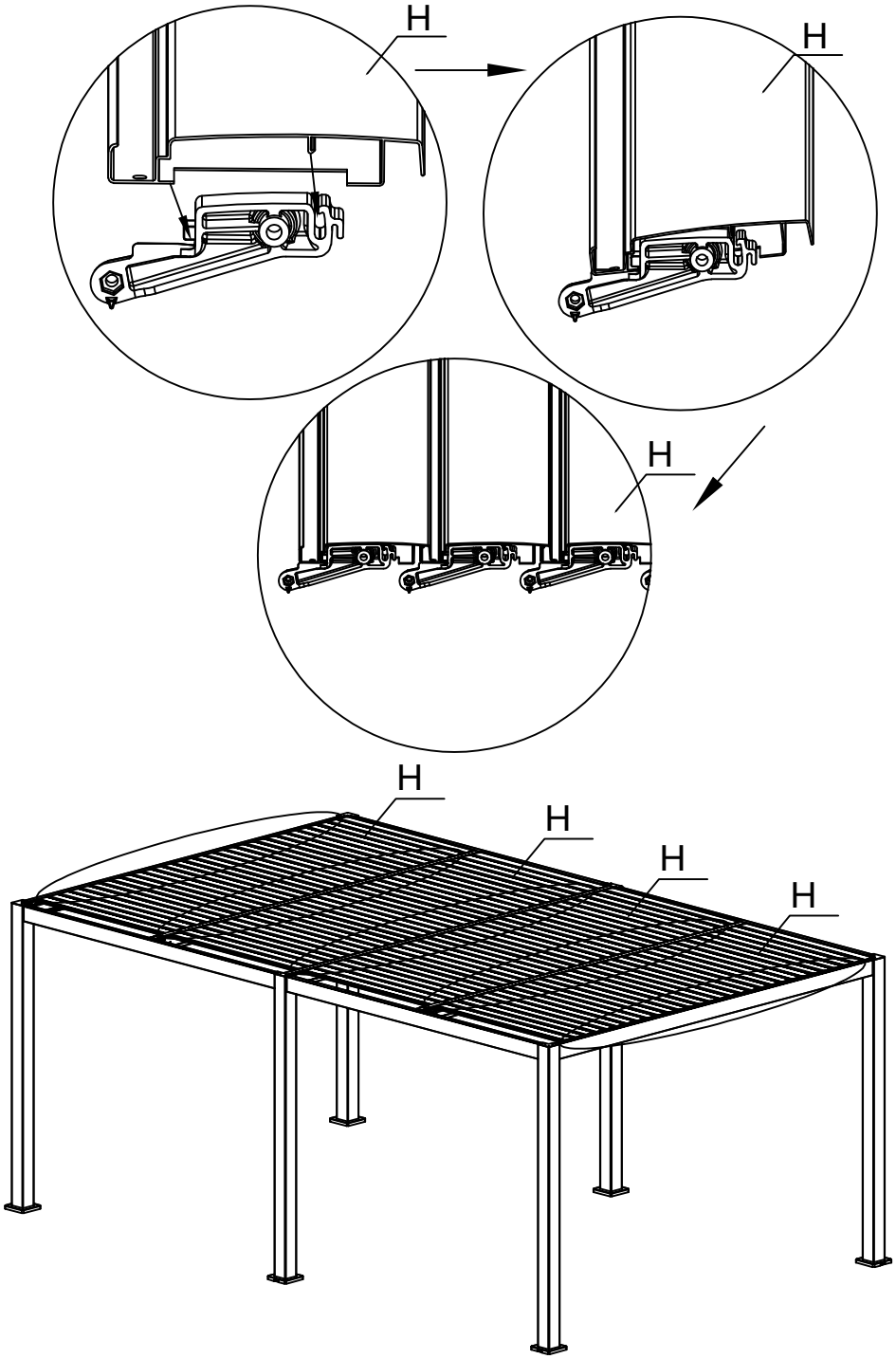

ASSEMBLY STEP 13

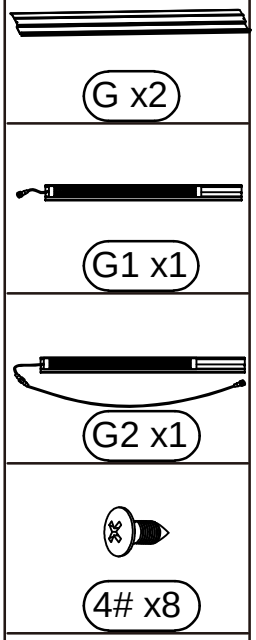

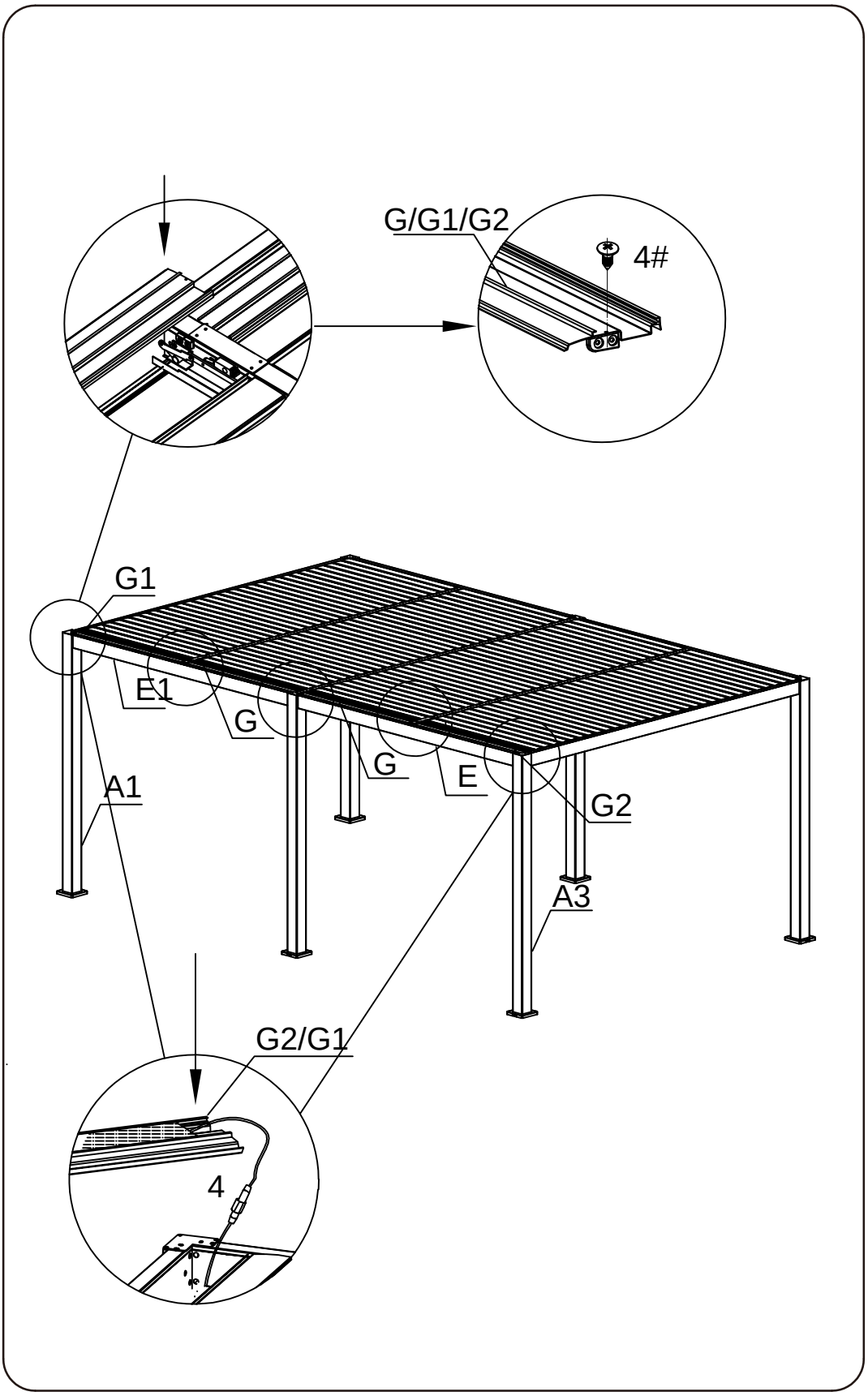

ASSEMBLY STEP 14

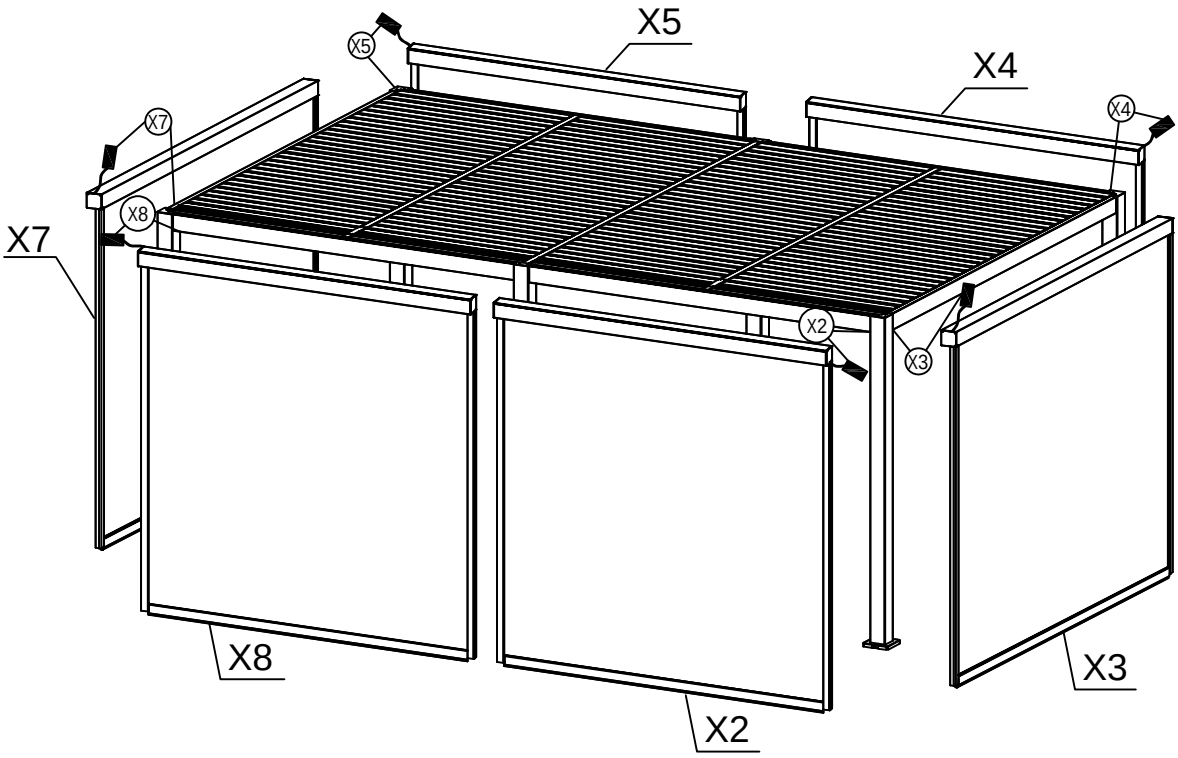

ASSEMBLY STEP 15

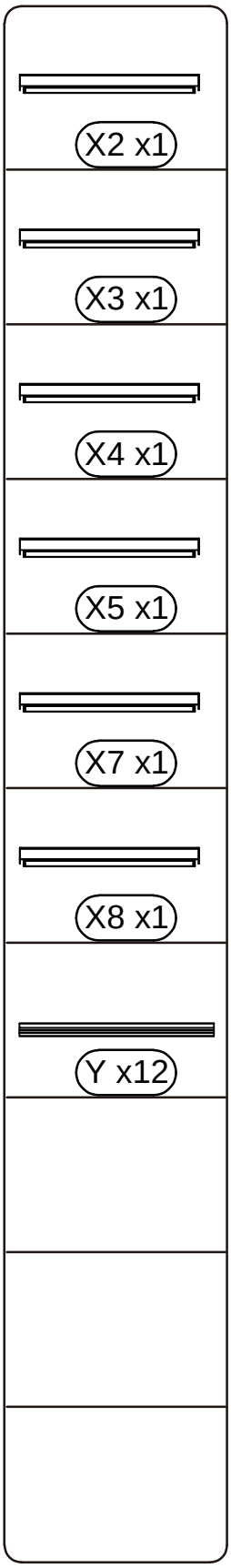

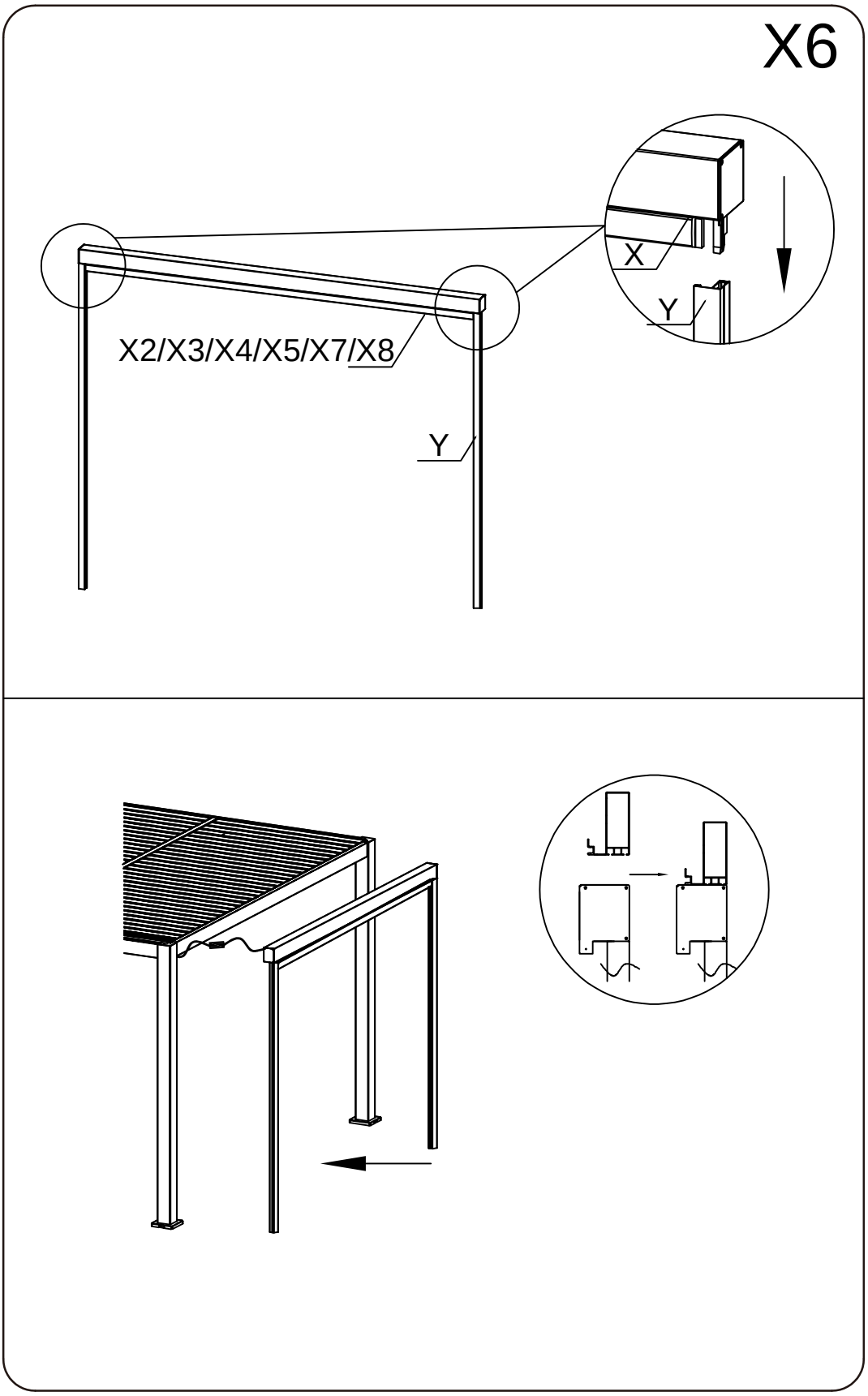

ASSEMBLY STEP 16

Z1 x36

Z2 x12

X6

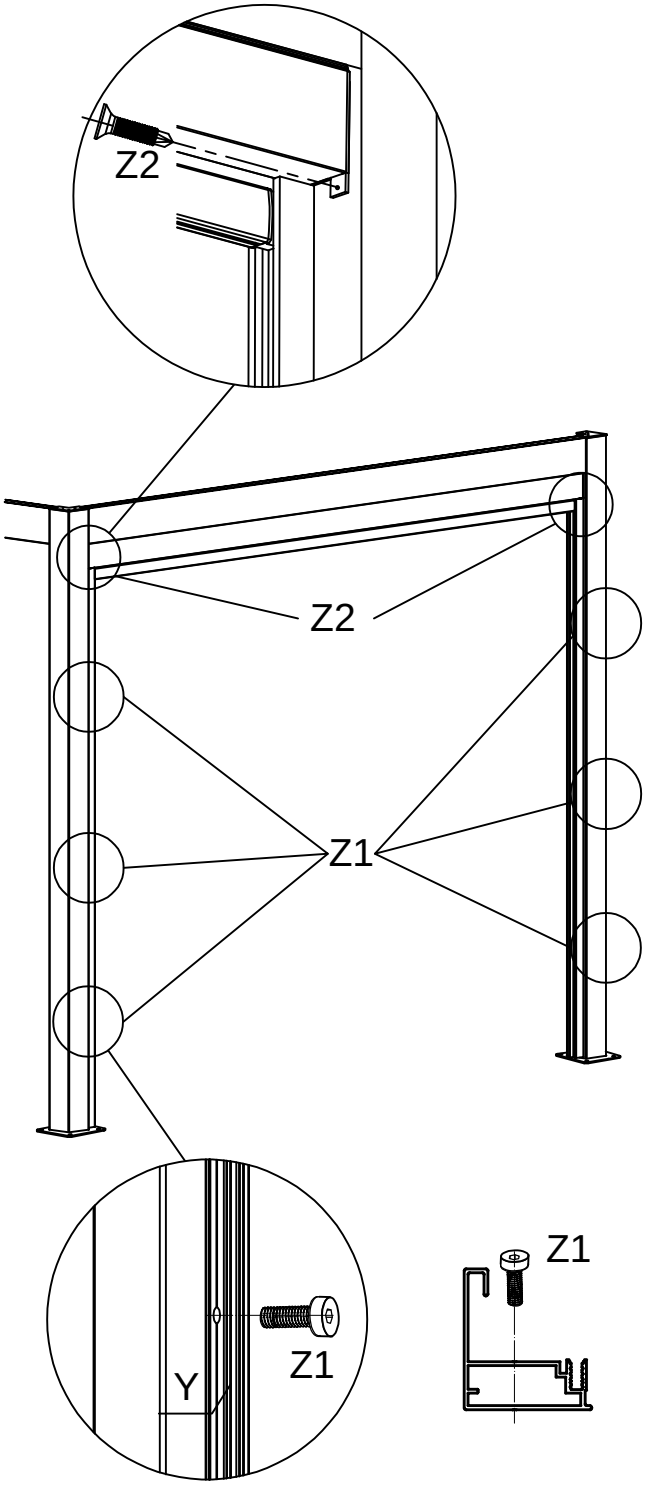

ASSEMBLY STEP 17

Synchronization of the remote control with the roller blinds.

You need to synchronize the 6 curtains with the remote control. The operation only takes a few seconds.

1. Select channel 2 on the remote control.
2. Press and hold the yellow button (encoding key T) at the end of the curtain using a pointed object. When the motor beeps and rotates briefly, release the button. Press the "up" button on the remote control. The curtain is now synchronized.
3. Check that the curtain is properly synchronized by pressing the buttons on the remote control to raise/lower the curtain.
4. Repeat steps 1 & 2 for the other 5 curtains (channels 3, 4, 5, 7and 8). You can choose any curtain.

1

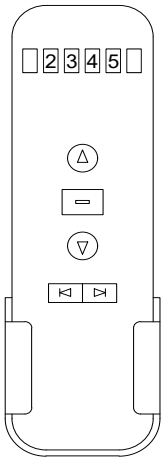

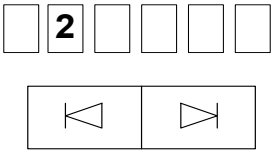

2

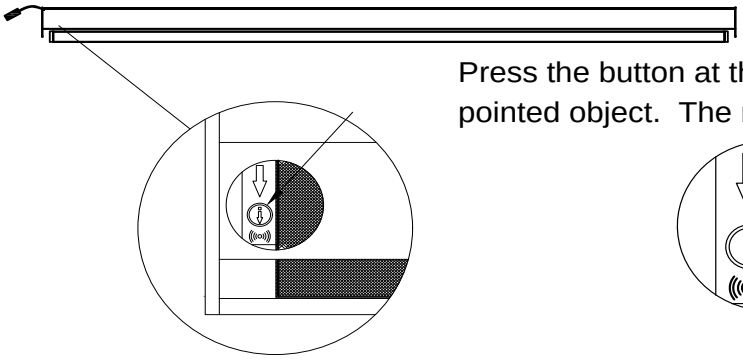

Press the button at the end of the curtain with a pointed object. The motor will rotate briefly.

3

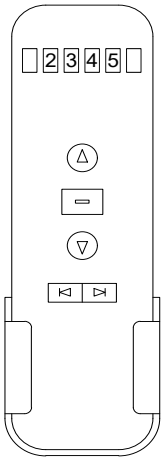

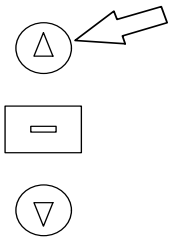

ASSEMBLY STEP 18

Y2 x12

Important: Unroll the curtain a few inches to make it easier to insert into the side rails.

X6

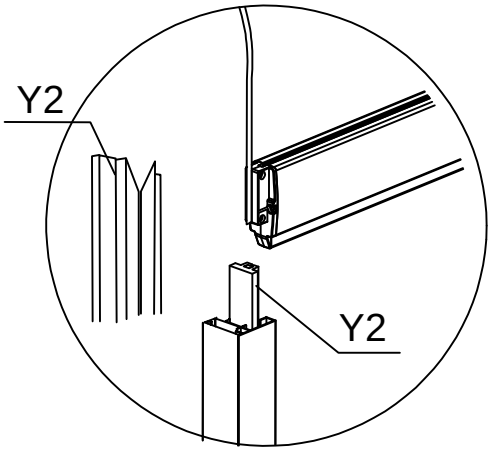

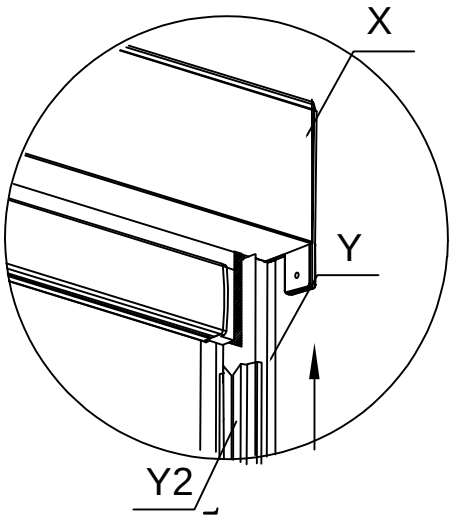

Ensure that the notched end of the rail (V-shaped) is positioned at the top and not at the bottom.

The plastic rail must be placed with the indented part at the top of the curtain.

The notched part of the plastic rail must be installed at the top of the post to ensure easy insertion of the curtain and prevent damage.

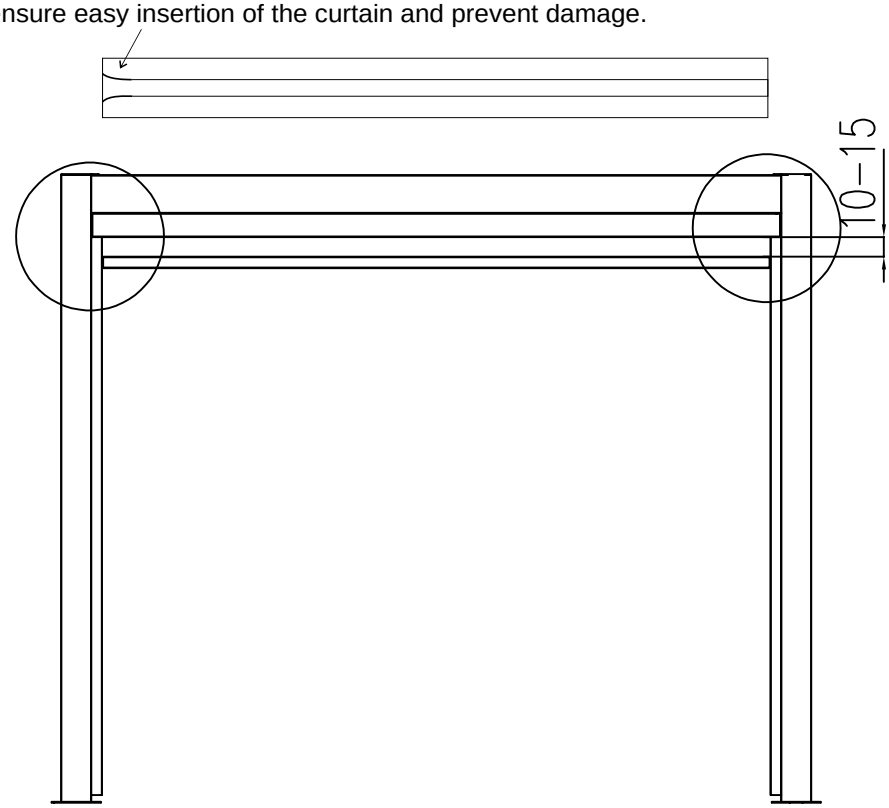

Once the curtain has been inserted into the plastic rail, unroll it to the bottom of the pergola and pull it back up so that it fits evenly between the pergola posts.

ASSEMBLY STEP 19

Y1 x12

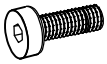

Z3 x36

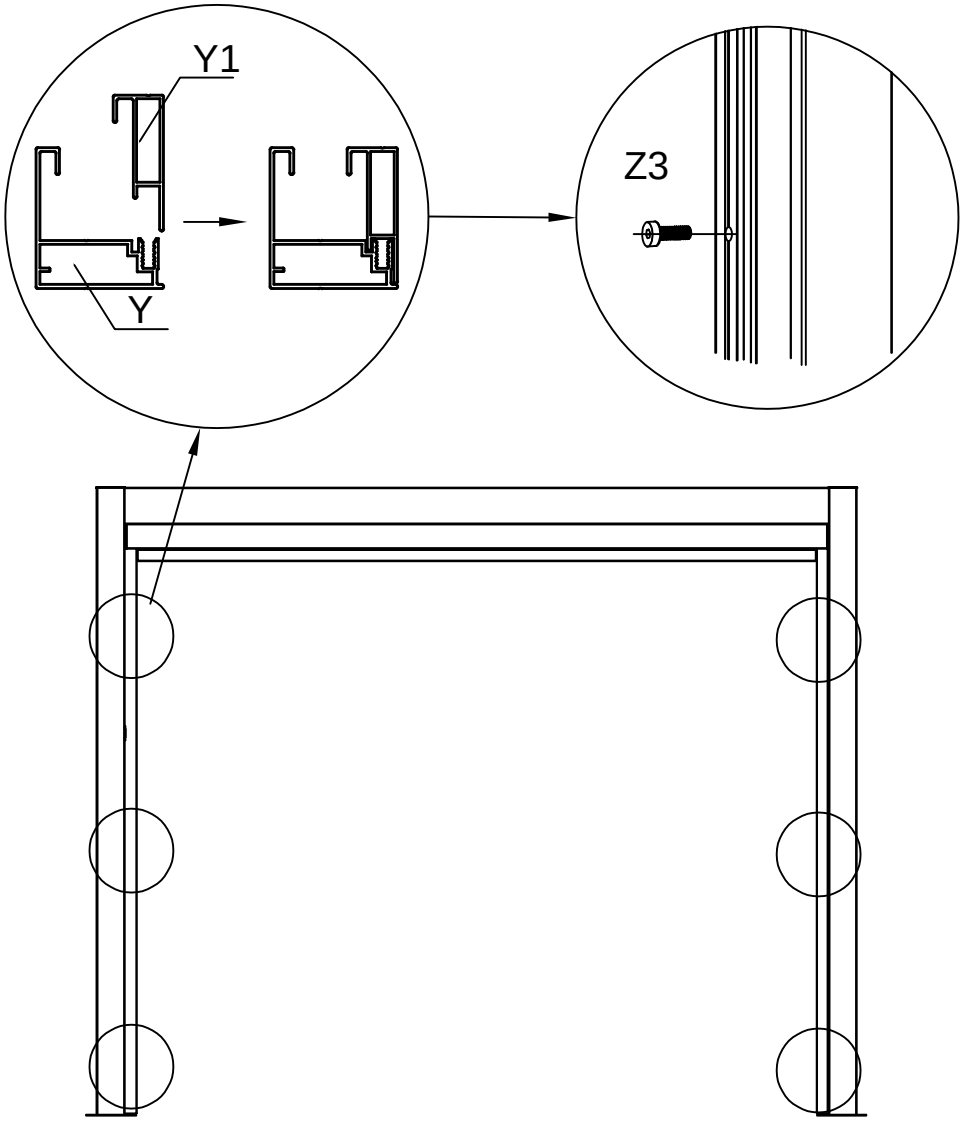

ASSEMBLY STEP 20

Adjusting the upper and lower limit positions of the curtains.

Attention:

1. This adjustment is only necessary if the curtain(s) does not raise or lower completely.

When adjusting the curtain, if you do not take any action for 30 seconds, the adjustment will not be saved. You will then need to repeat the process.

Adjusting the upper limit

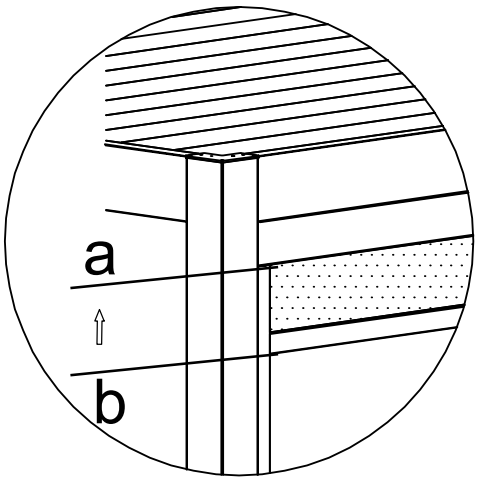

1	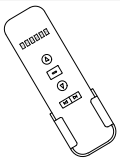	Raise the curtain as high as possible.	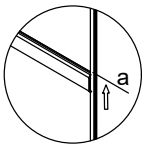
2	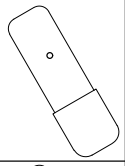	Press a pointed object into the opening on the back of the remote control to activate adjustment mode. The mode performs a quarter turn.	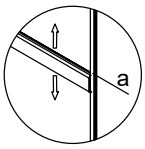
3	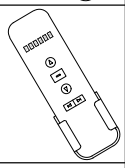	Press the Up button to adjust to the desired position.	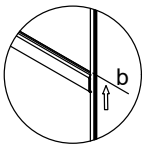
4	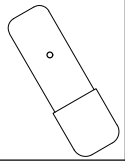	Once the desired position has been reached, press the button on the back of the remote control again to save the new position. The motor will turn a quarter turn.	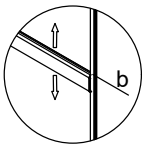

Adjusting the lower limit

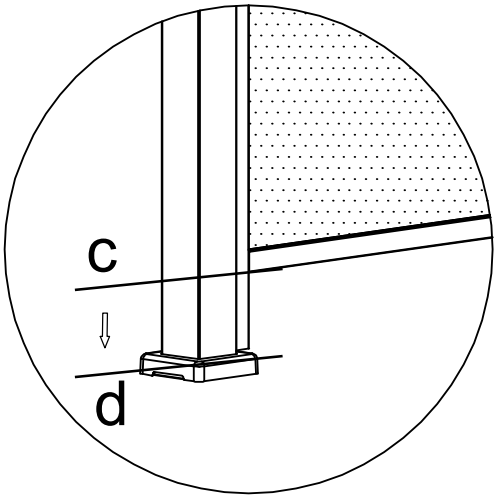

1	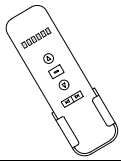	Lower the curtain as far as possible.	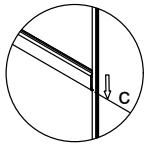
2	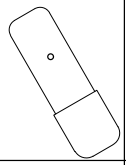	Press a pointed object into the opening on the back of the remote control to activate adjustment mode. The mode performs a quarter turn.	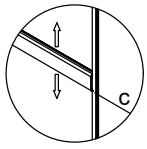
3	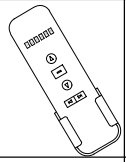	Press the Down button to adjust to the desired position.	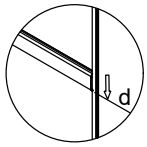
4	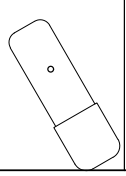	Once the desired position has been reached, press the button on the back of the remote control again to save the new position. The motor will turn a quarter turn.	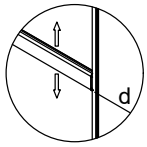

ASSEMBLY STEP 21

Z x6

X6

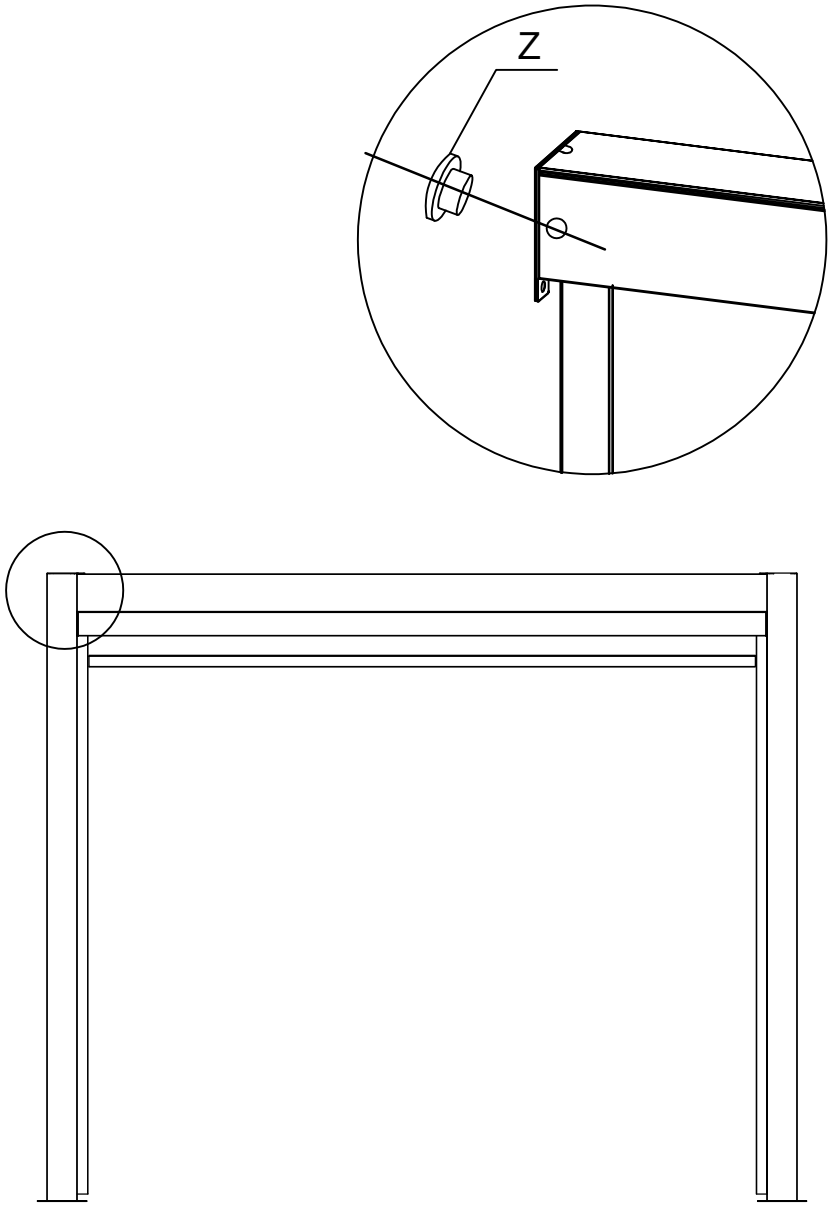

ASSEMBLY STEP 22

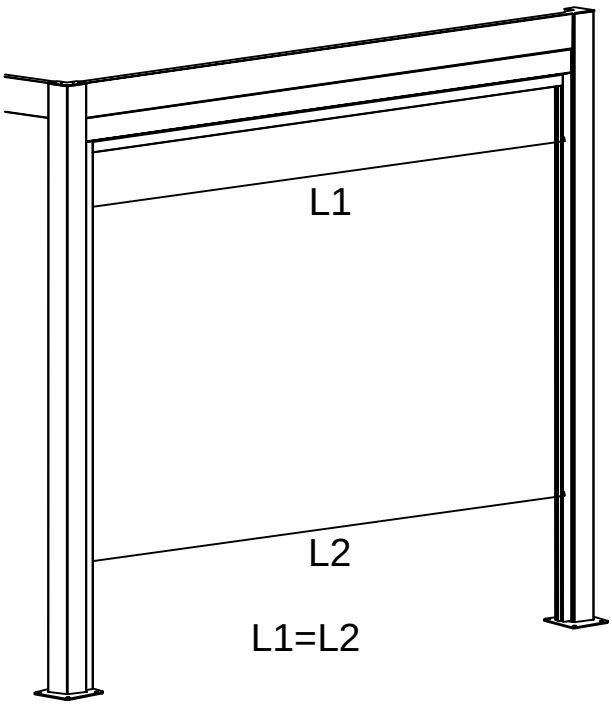

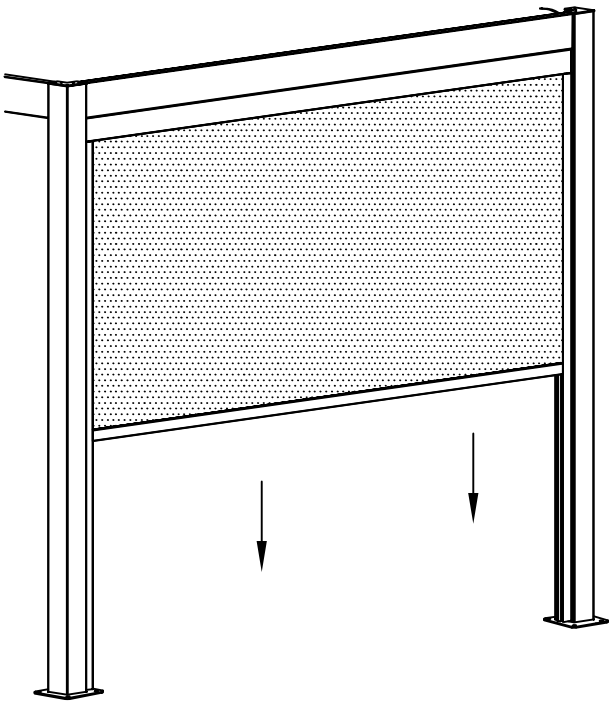

ASSEMBLY STEP 23

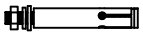

9# x24

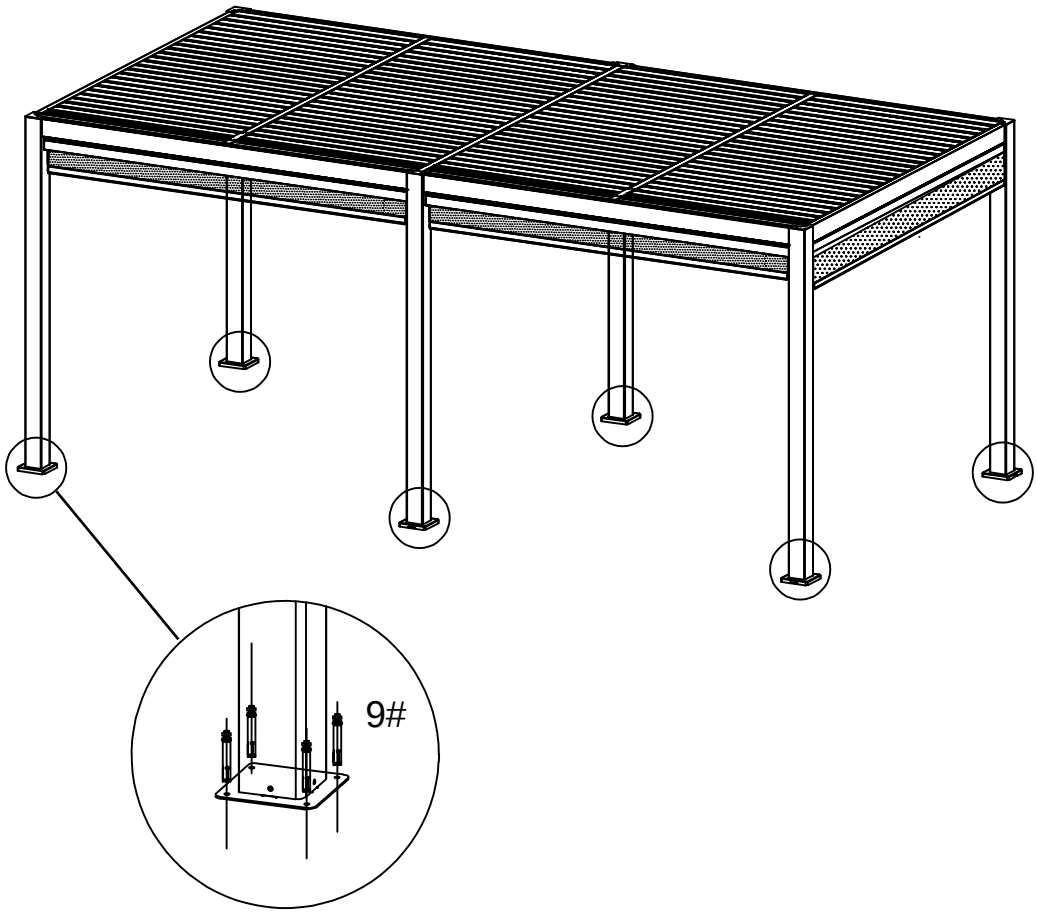

ASSEMBLY STEP 24

REMOTE CONTROL

The remote control has 16 channels and can control (adjust) the direction of the Louver (Channel 1), raising or lowering curtains (channel 2.3.4.5.7.8),LED lights (channel 6)

We recommend that you prioritize the remote control over the control panel.

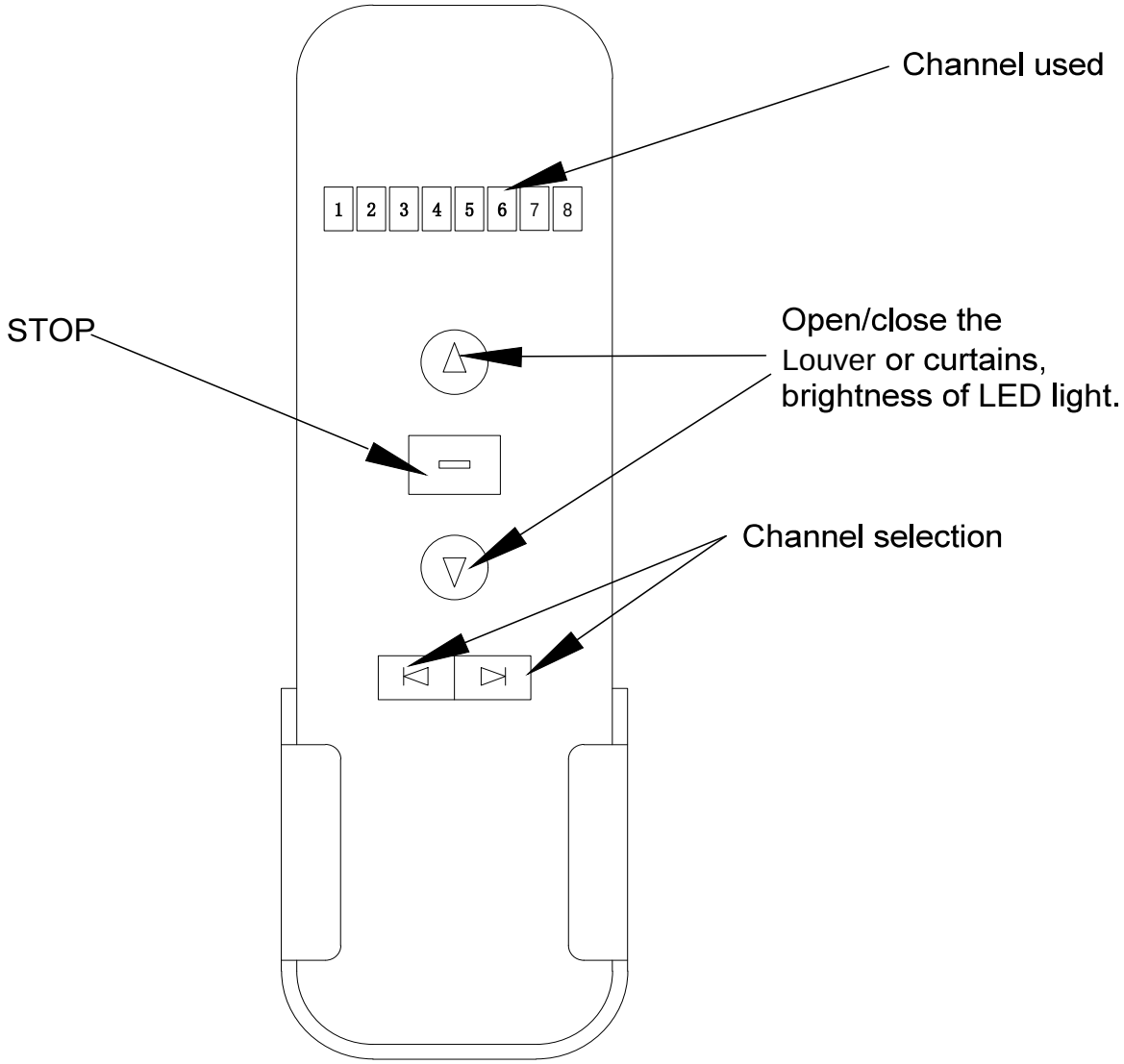

The remote control is equipped with a CR-2032 battery. It operates at 433.92 MHz and has a maximum coverage of about 40-50 meters, depending on the environment.

ASSEMBLY STEP 25

Product appearance and function

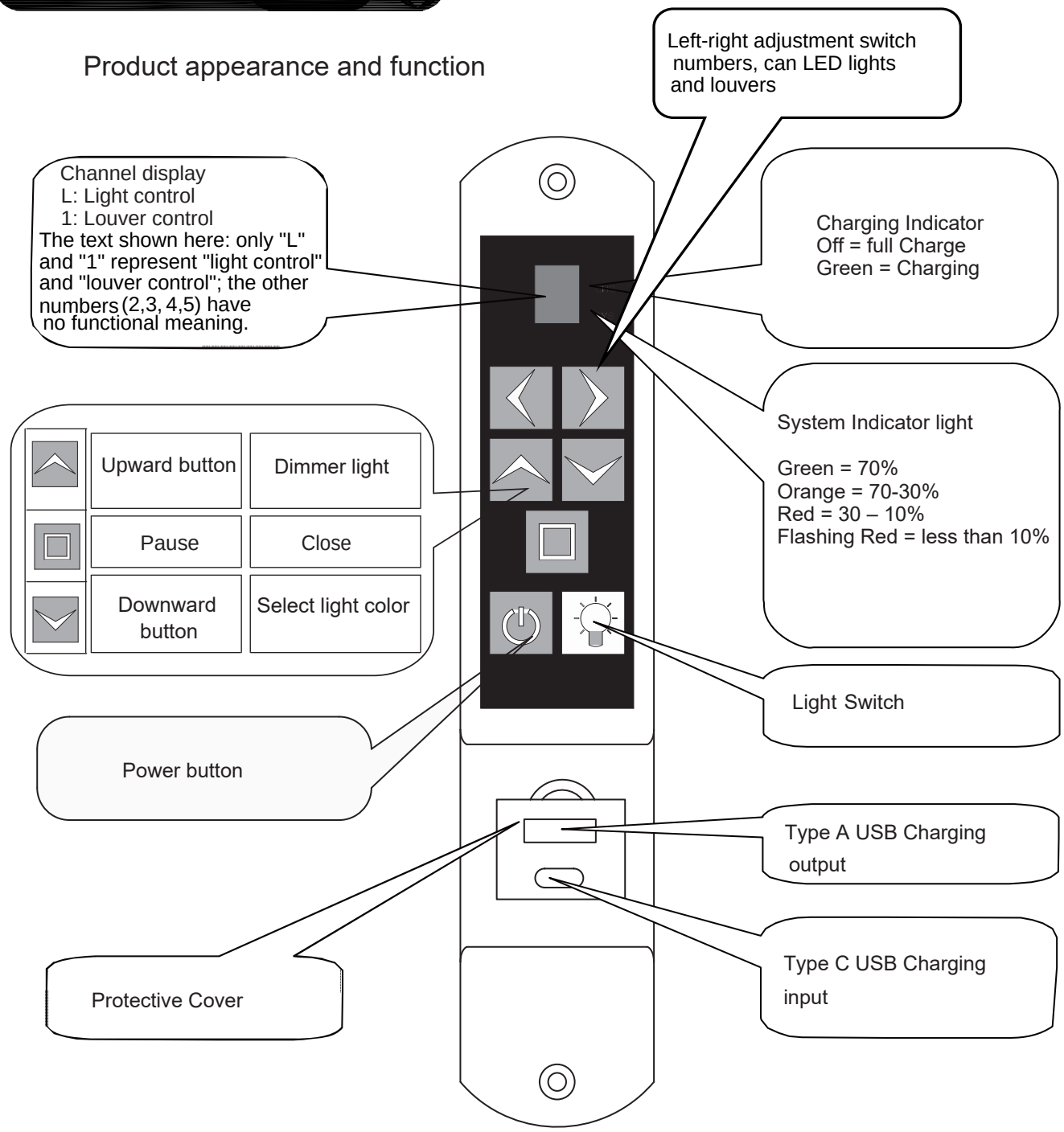

Attention, the cable must be positioned inside the pole to avoid being cut off.

Press the power button to run the lighting. When the letter L appears you can use the manual remote control, or use the controller on the pole. Press the bottom arrow to choose the color of the lighting, press the top arrow to adjust its intensity.
Please charge the battery fully for the first use, using a charger with a Type-C socket (same as the SAMSUNG phone for example), then the solar energy will take over. You can charge the battery with a Type-C socket, in case of prolonged lighting at night. A USB output also exists to allow you to charge

ASSEMBLY STEP 26

A1 Controller: Controls the entire Pergola's LED strip
and the motors for the right-side louvers.

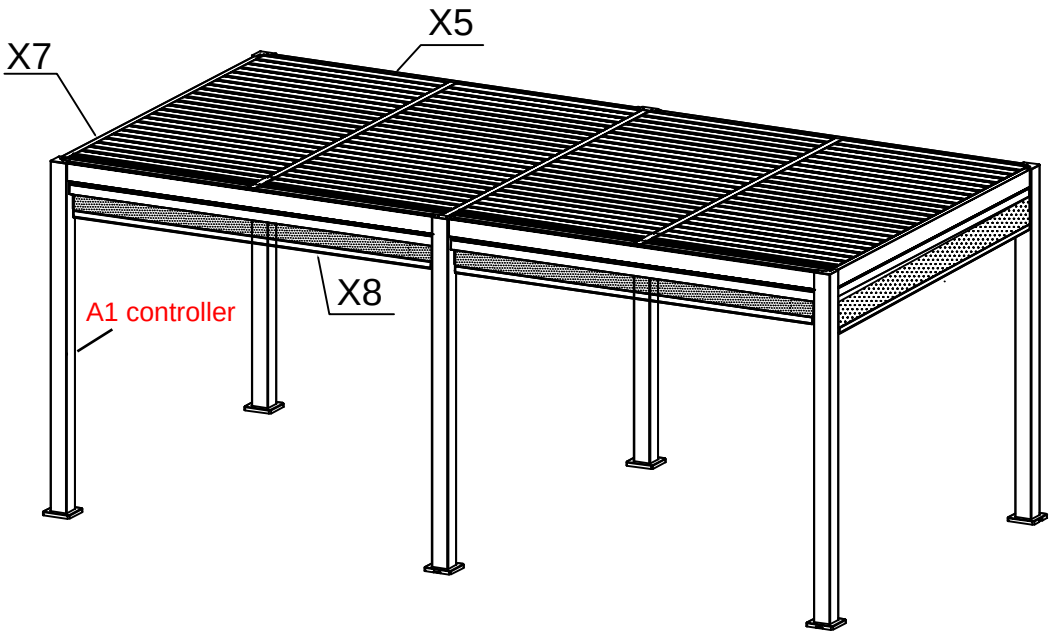

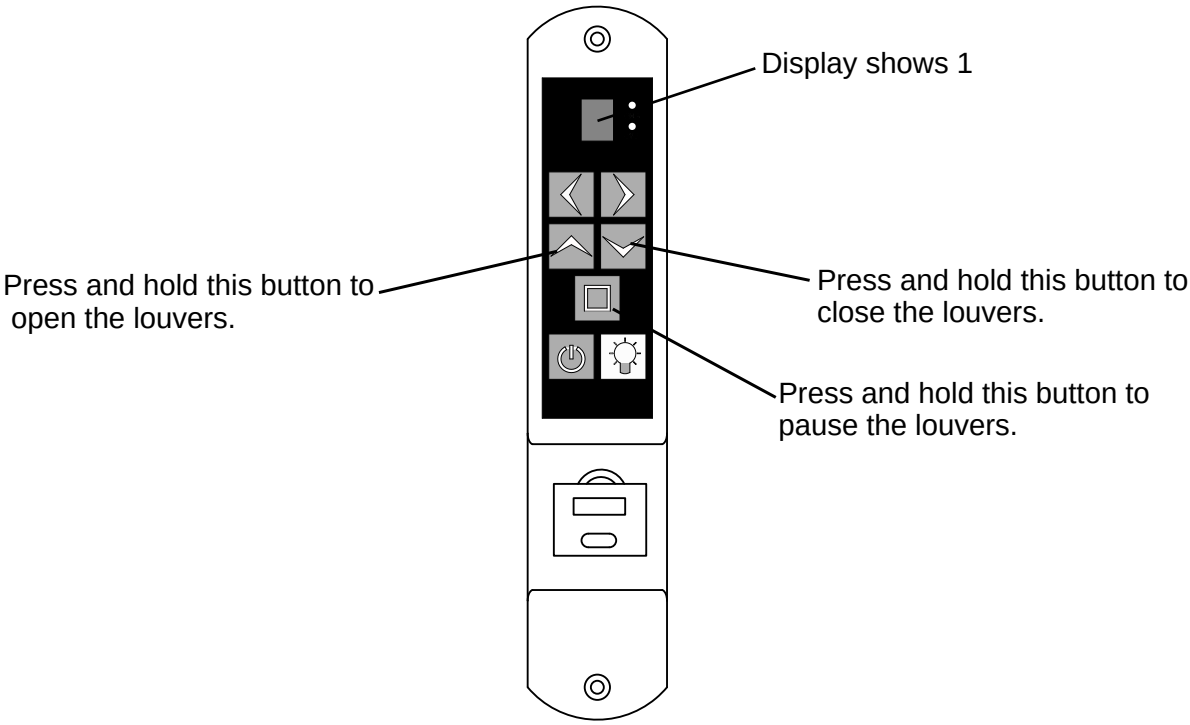

A1 controller

ASSEMBLY STEP 27

A3 Controller: Controls the motors for the left-side louvers.

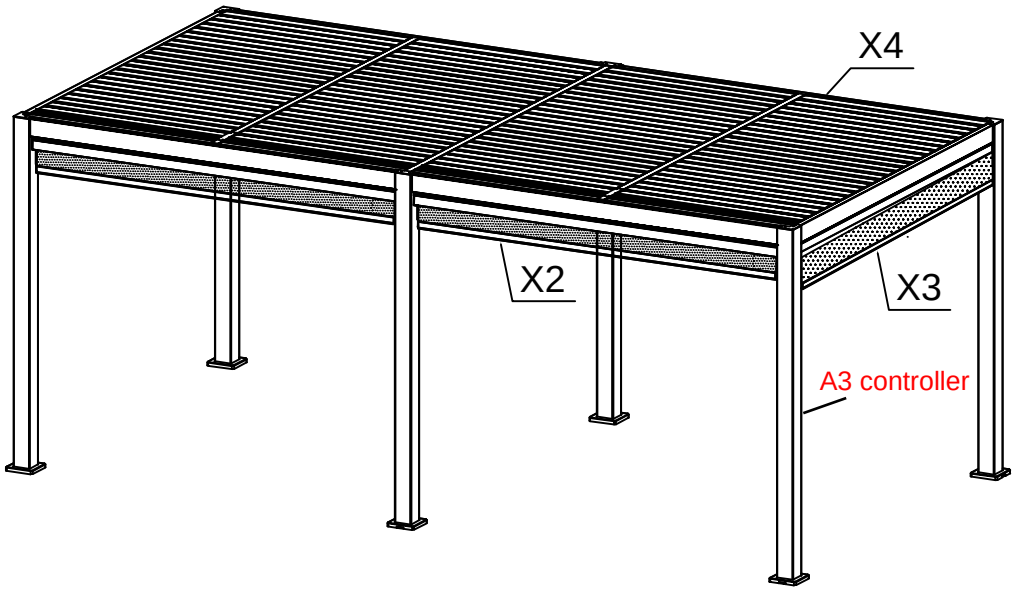

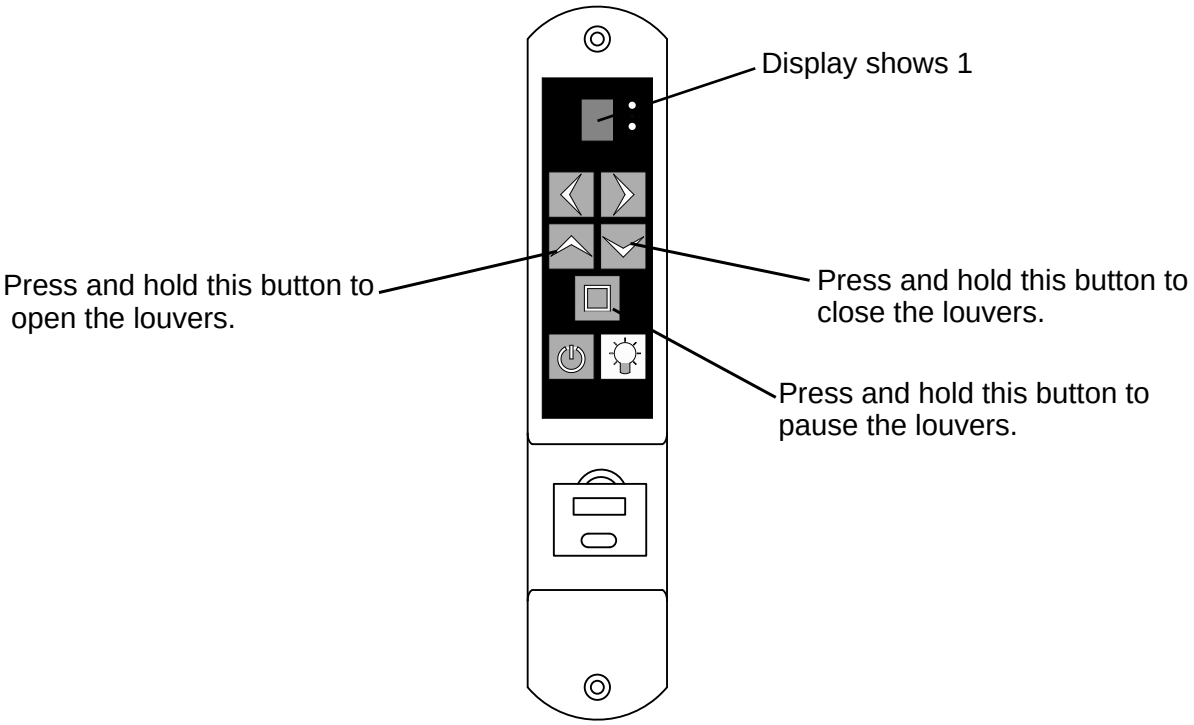

A3controller