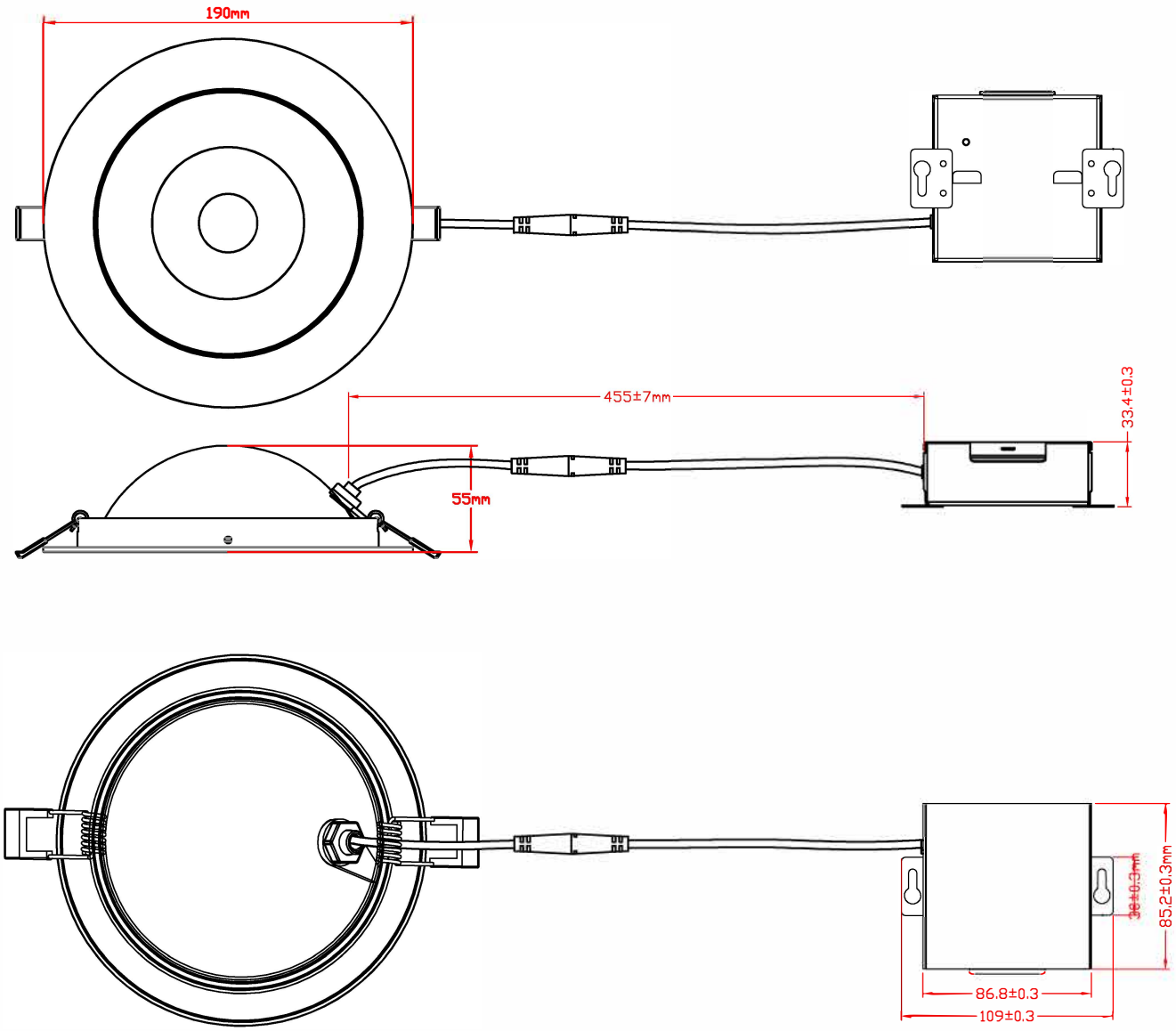

S11296

6" LED WIFI GIMBAL SLIM LIGHT