INSTALLATION GUIDE

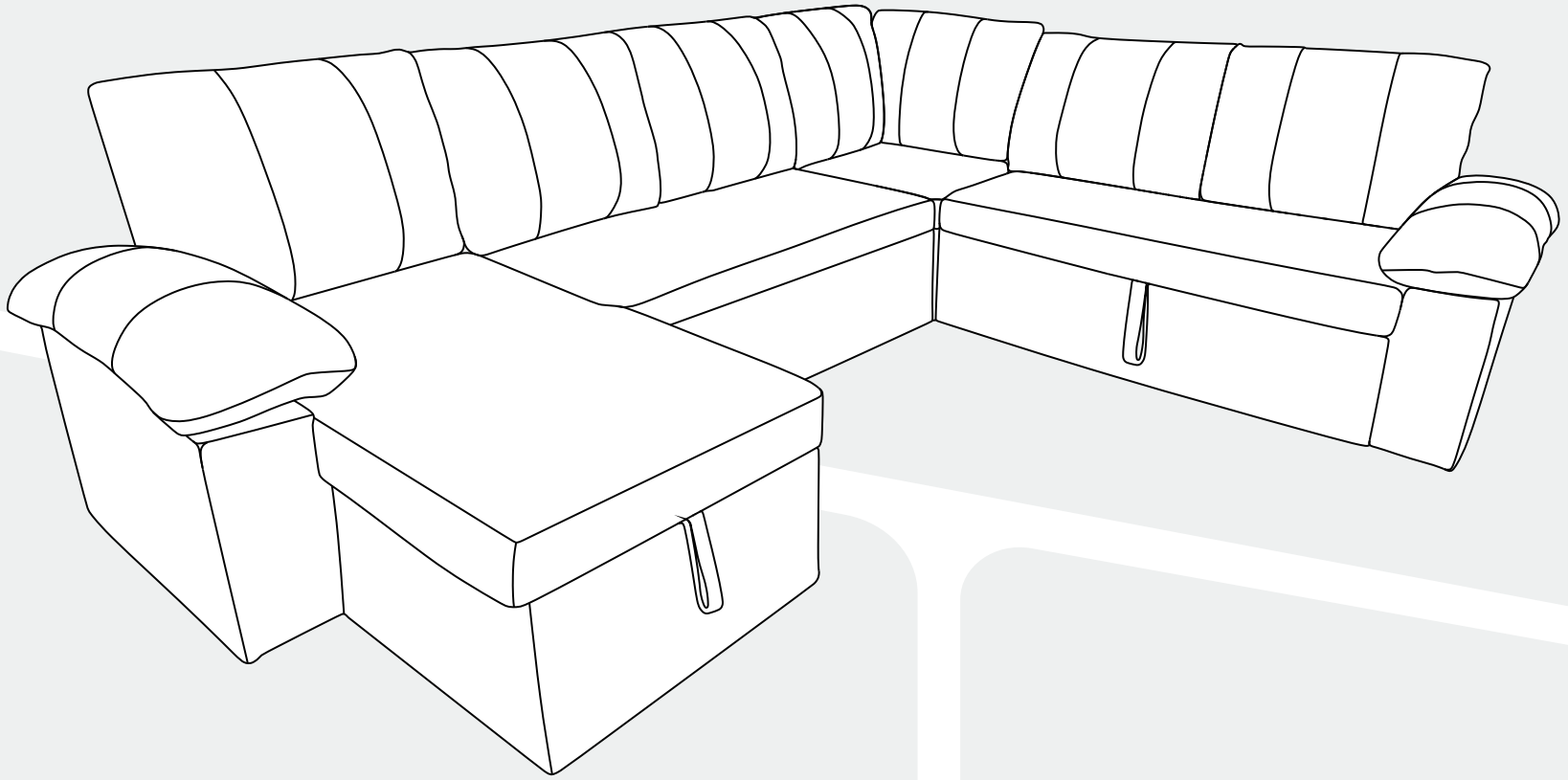

MULTI-FUNCTIONAL SECTIONAL

SIZE: 298.5 x 235 x 95.5cm

Contact Us: support@mkxliving.com

BEFORE YOU START

Check Your Boxes: This sofa ships in 4 boxes. They may not arrive at the same time. Please wait until all 4 are received before starting.
Check for Hidden Parts: Important! Some hardware and sofa legs (D-14) are packed inside the zipper compartment under the seat frame.
Check the Size: Verify the sofa frame fits your space BEFORE opening the vacuum-sealed cushions.

Assembly Pro-Tips

- **Hand Tools Priority:** We strongly recommend using Hand Tools for assembly to avoid damaging the frame.
- **Power Tool Caution:** If using a power drill, set it to LOW TORQUE only. High torque can cause screws to strip or parts to crack.
- **The "70% Rule":** To ensure all holes align perfectly, do NOT tighten screws 100% until the entire section is put together. This allows for easier adjustment during assembly.
- **Wait for Expansion:** Vacuum-packed cushions need 48–72 hours to fully expand and for wrinkles to disappear.
- **Protection:** Assemble the sofa on a spacious, clean surface (like a rug or the cardboard box) to prevent scratches.

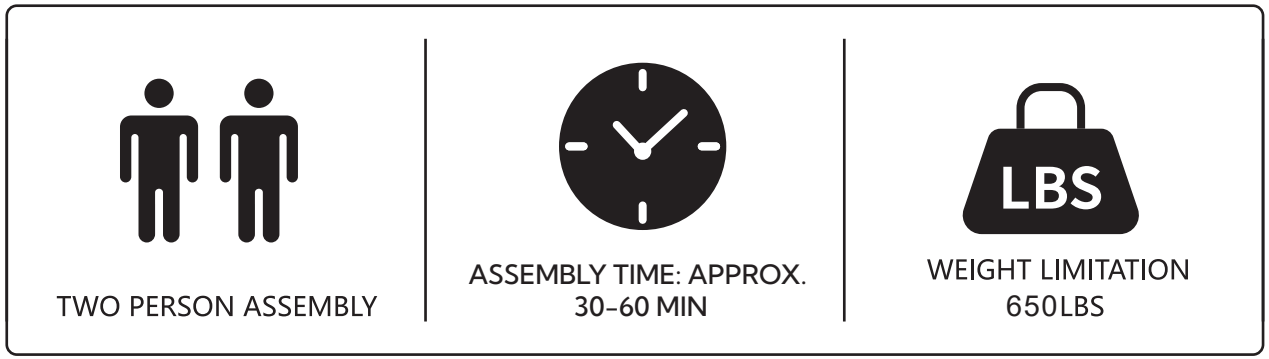

Safety & Care

- **Prohibited Use:** Do NOT stand on the sofa or use any part of it as a step ladder.
- **Choking Hazard:** Keep all small parts, plastic bags, and foam away from children and pets to avoid potential suffocation.
- **Maintenance:** Periodically check and retighten all screws every 3–6 months to ensure structural integrity.
- **Environment:** Keep the sofa away from open flames, direct sunlight, and humid areas to prevent distortion or discoloration.
- **Warranty Warning:** Using the product in a way inconsistent with these instructions may void your warranty.

Seller's Notice:
Our product is packed in separate boxes as shown below, and they might be shipped in different batches. Please wait until you received all the boxes then start the assembly. The following is the list of components contained in each box.

BoxA

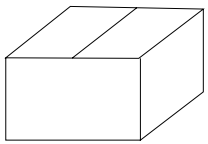

Main structure accessories

A-1		Corner-seat Back Frame x1
A-2		Corner-seat Back Frame x1
A-3	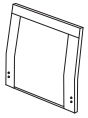	Chaise Back Frame x1
A-4	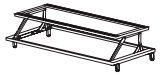	Pull-out Sofa Frame x1
A-5	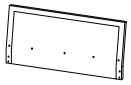	Two-seat Back Frame x1
A-6		Storage Back Frame x1
C-15	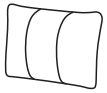	Pillow x2

BoxD

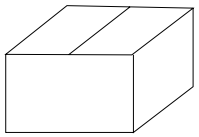

Hardware parts A

a		M6*20 x16+1
b		M6*55 x4
d		M6*30 x2+1
e		M6*20 x4
f		M8*20 x12+1
g		M6*20 x6+1
h		M6 Allen Key x1

Hardware parts B

a		M6*20 x16+1
c		M6*40 x8+1
e		M6*20 x4
f		M8*20 x4
h		M6 Allen Key x1
l		M6*40 x2

Hardware parts C

a		M6*20 x8+1
c		M6*40 x4
e		M6*20 x8+1
f		M8*20 x8+1
h		M6 Allen Key x1

Hardware parts D

a		M6*20 x12+1
e		M6*20 x4
f		M8*20 x12+1
g		M6*20 x6+1
h		M6 Allen Key x1

Structure accessories

D-1	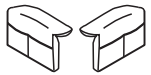	Armset x1	D-8		Connector x6
D-2	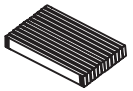	Two-seat Wooden Strips x1	D-9		V-shaped connector x8
D-3	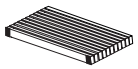	Pull-out Sofa Wooden Strips x1	D-10	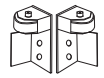	Roller x1
D-4		Storage Wooden Strips x1	D-11		Connector x1
D-5		Chaise Wooden Strips x1	D-12		Connector x1
D-6		Corner-seat Wooden Strips x1	D-13		Corner support leg x1
D-7		Connector x7	D-14		Leg x19
			D-15		Chaise cross iron pipe x1
			D-16		Chaise side iron pipe x2
			D-17		Corner iron pipe x2

Seller's Notice:
Our product is packed in separate boxes as shown below, and they might be shipped in different batches. Please wait until you received all the boxes then start the assembly.
The following is the list of components contained in each box.

BoxC

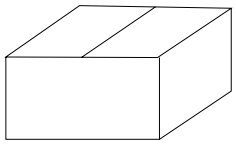

Main structure accessories

C-1	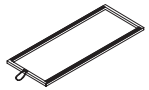	Chaise Iron Frame	x1
C-2	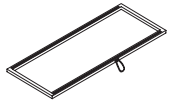	Storage Iron Frame	x1
C-3	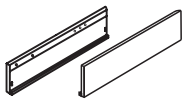	Chaise Side Panel	x1
C-4	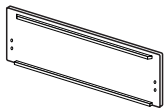	Two-seat Front Frame	x1
C-5	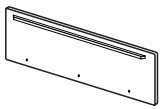	Pull-out Sofa Front Frame	x1
C-6	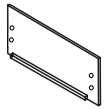	Chaise Front Panel	x1
C-7	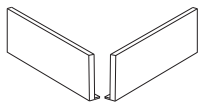	Two-seat Side Panel	x1
C-8	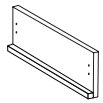	Corner-seat Side Panel	x1

Main structure accessories

C-9	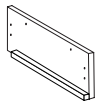	Corner-seat Side Panel	x1
C-10		Storage Side Panel	x1
C-11		Storage Side Panel	x1
C-12		Two-seat Back Iron Pipe	x1
C-13		Two-seat Iron Pipe	x1
C-14		Chaise back frame Iron Pipe	x1
C-15	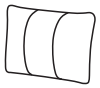	Pillow	x2

BoxB

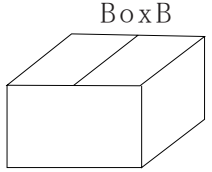

Main structure accessories

B-1	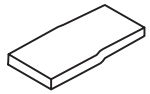	Chaise Cushion	x1
B-2	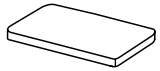	Storage Cushion	x1
B-3		Two-seat Cushion	x1
B-4		Pull-out Sofa Cushion	x1
B-5		Corner-seat Cushion	x1
B-6	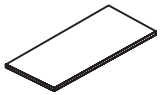	Chaise Bottom Panel	x1
B-7	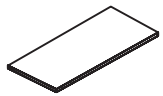	Storage Bottom Panel	x1
B-8		Armrest Cushion	x2
C-15	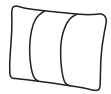	Pillow	x3

CHAISE

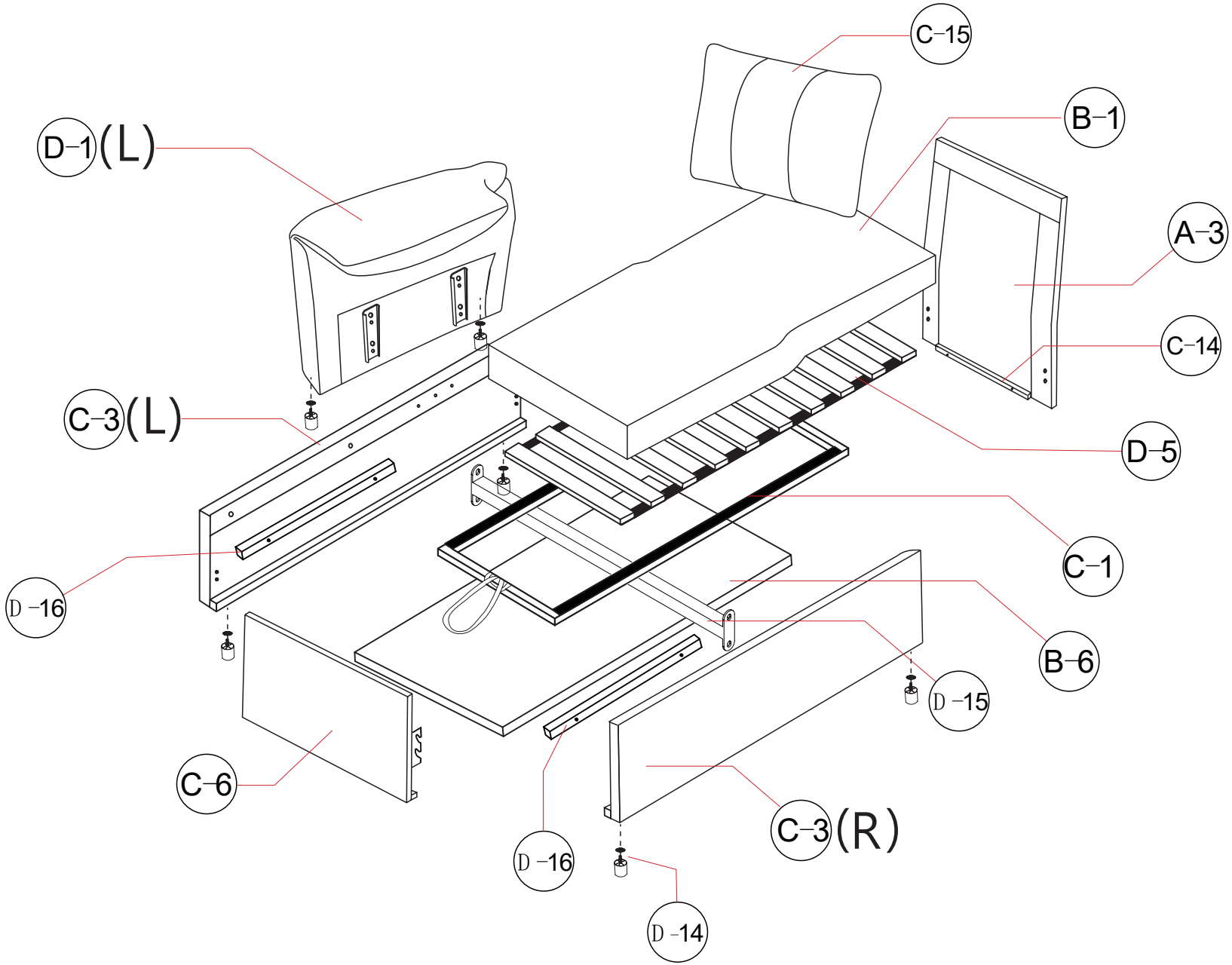

Main structure accessories

A–3 **Chaise Back Frame**

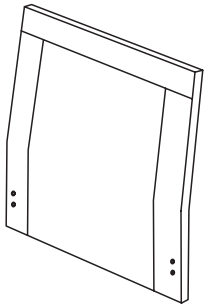

x1

C–3 **Chaise Side Panel**

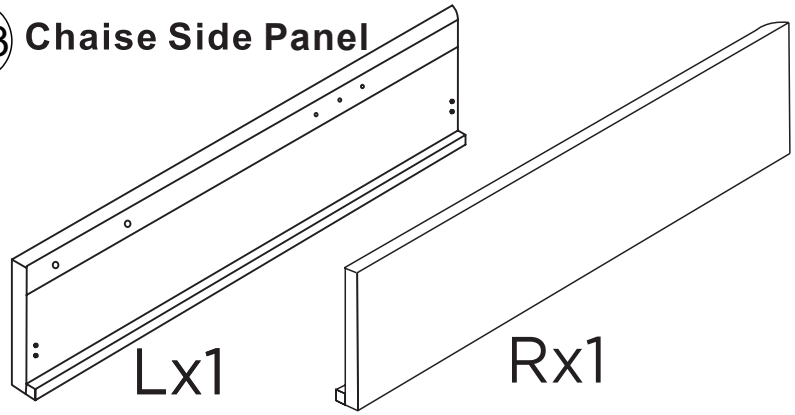

Lx1 Rx1

C–6 **Chaise Front Panel**

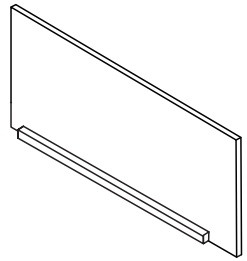

x1

C–1 **Chaise Iron Frame**

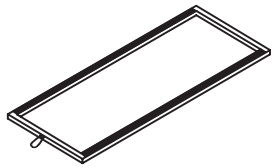

x1

B–1 **Chaise Cushion**

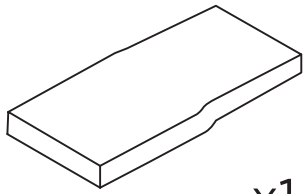

x1

B–6 Chaise Bottom Panel

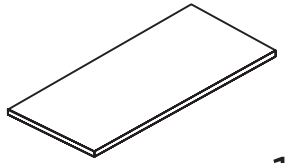

x1

C–14 **Chaise Back Frame Iron Pipe**



x1

C–15 **Pillow**

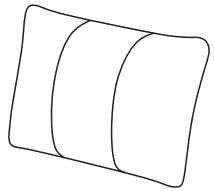

x1

B–8 **Armrest Cushion**

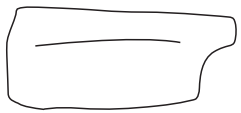

x1

D–1 **Armrest**

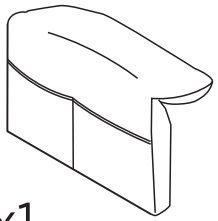

Lx1

D–5 **Chaise Wooden Strips**

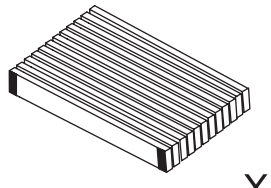

x1

D–15 **Chaise Iron Pipe**

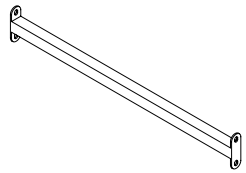

x1

D–16 **Chaise Iron Pipe**

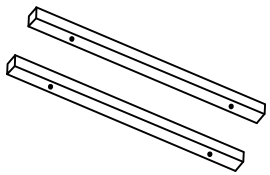

x2

Hardware parts

a Bolt

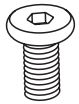

M6*20 x16

b Bolt

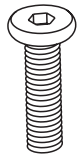

M6*55 x4

d Bolt

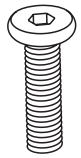

M6*30 x2

e Bolt

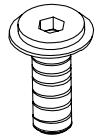

M6*20 x4

f Bolt

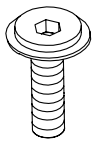

M8*20 x12

g Bolt

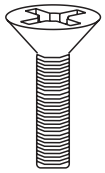

M6*20 x6

h Allen Key

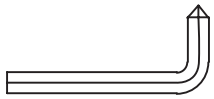

M6 x1

Structural accessories

D-7 D-8 Connector

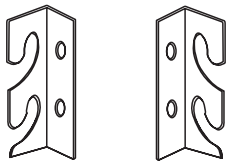

Lx2 Rx2

D-11 Connector

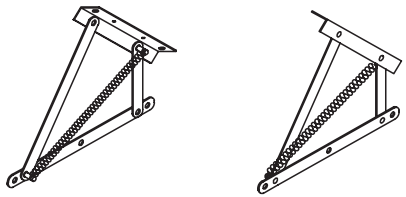

Lx1 Rx1

D-14 Sofa leg

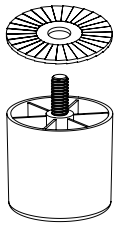

x6

D-9 V-shaped connector

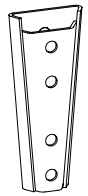

x2

STEP 1

Screw in Legs (D-14) with Washer to Chaise Side Panel (C-3) clockwise until secure. Attach the connector to the chaise side panel using screw (a).

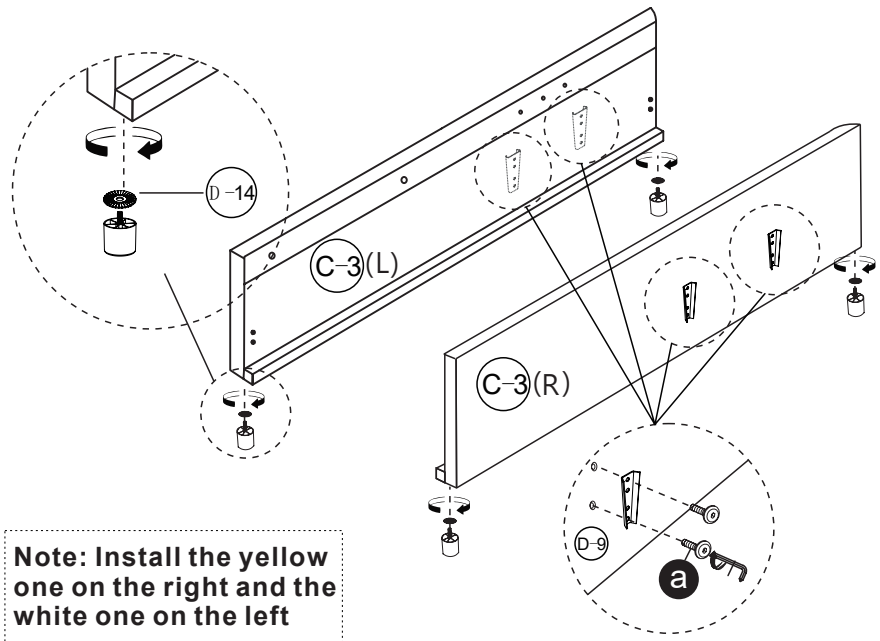

Note: Install the yellow one on the right and the white one on the left

D-14 x4
D-9 x2
a x8
h

STEP 2

Attach Back Frame & Side Panel Connector (D-7) (D-8)to Chaise Back Frame (A-3) using screw (g). **NOTE: Do not tighten the screws completely**

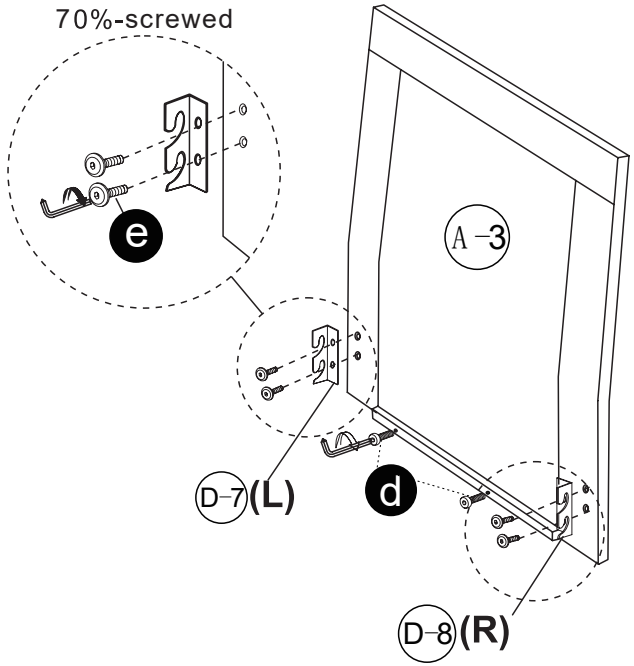

d
e x4
h
D-7 Lx1
D-8 Rx1

STEP 3

First, loosen the pre-installed screws on the Side Panel (C-2), then hook it onto the Connector.

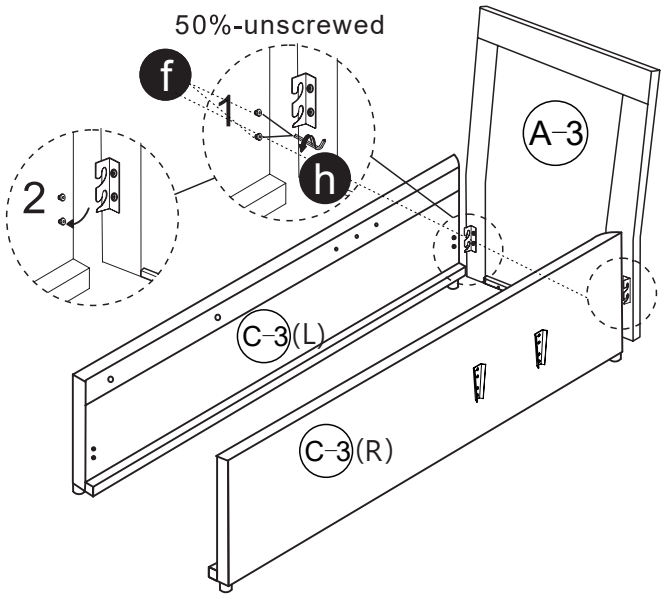

Loosen the screws at first for better engagement.

f x4
h

STEP 4

First, loosen the pre-installed screws on the Side Panel , then hook it onto the Chaise Front Panel (C-6).

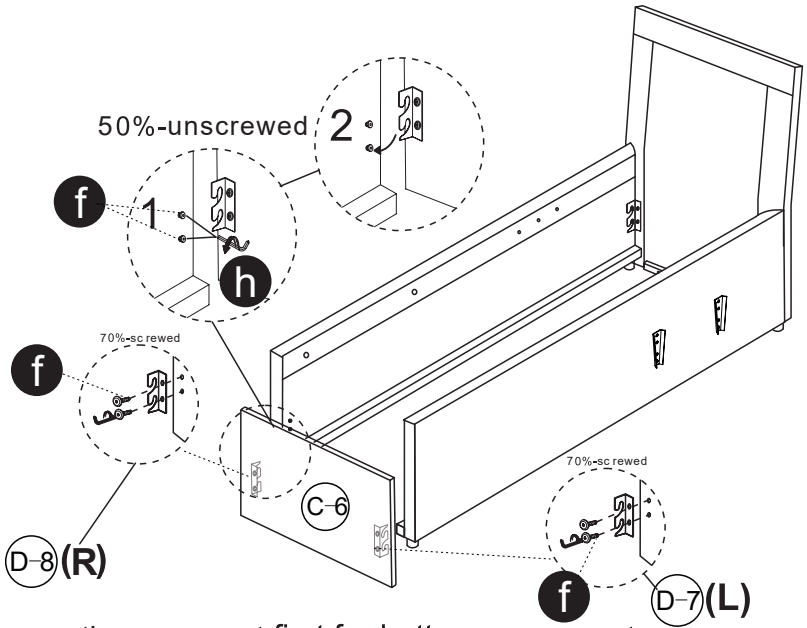

Loosen the screws at first for better engagement.

f x8
h
D-7 Lx1
D-8 Rx1

STEP 5 Adjust the screw to make Back Frame is perpendicular to the Side Panel , then place the Chaise Bottom Panel (B-6) and tighten all screws.

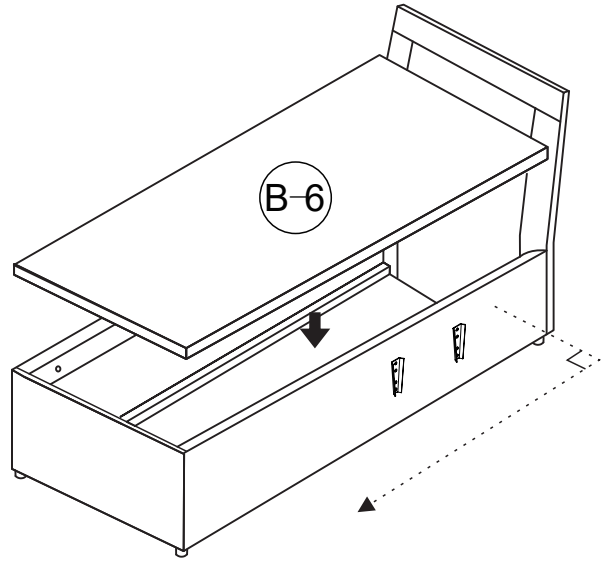

Adjust the screw to make the side panel and back panel vertical to facilitate subsequent installation.

STEP 6 Attach Chaise Iron Pipe (D-16) to Side Panel (C-3) using screw (b).

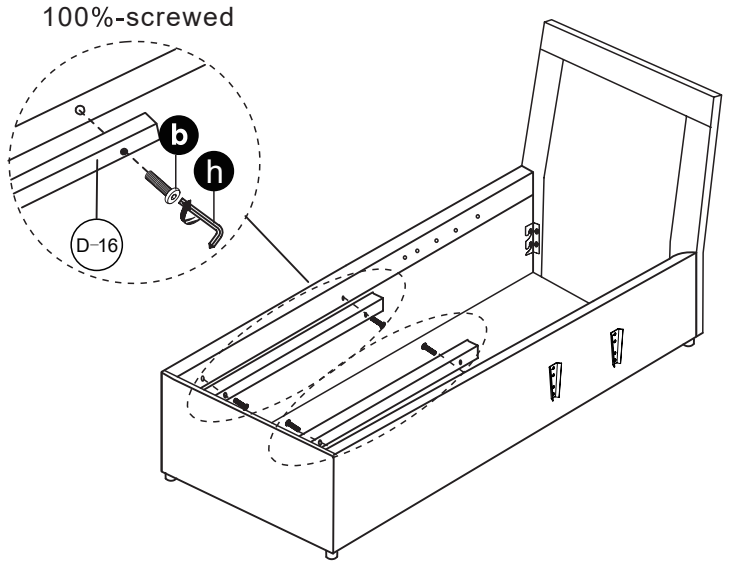

STEP 7 Attach Chaise Iron Pipe (D-15) to Side Panel (C-3) using screw (a).

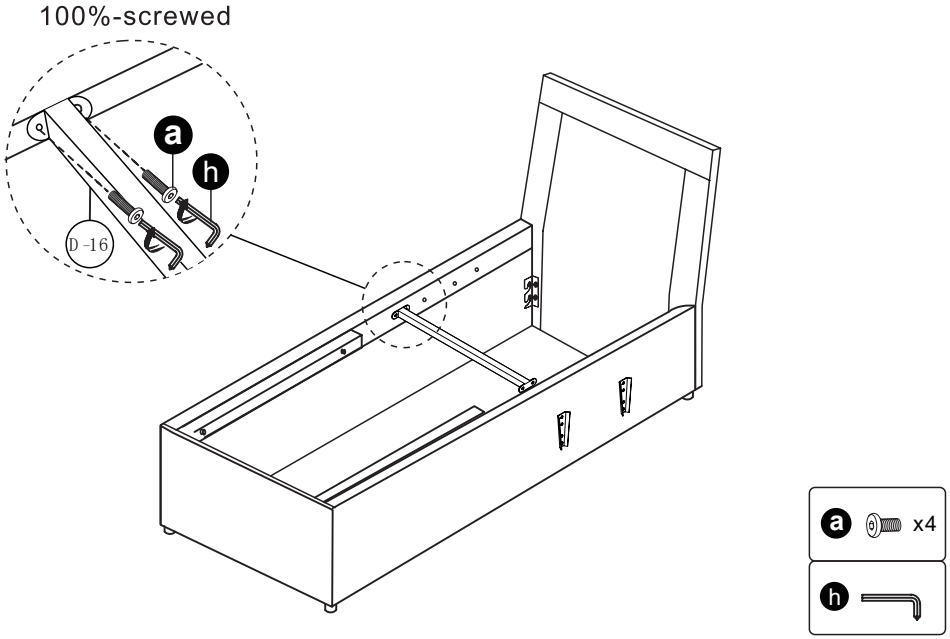

STEP 8 As shown in the diagram, attach Iron Frame & Side Panel Connector (D-11) to Chaise Iron Frame (C-1) using screw (a), and attach the drawstring.

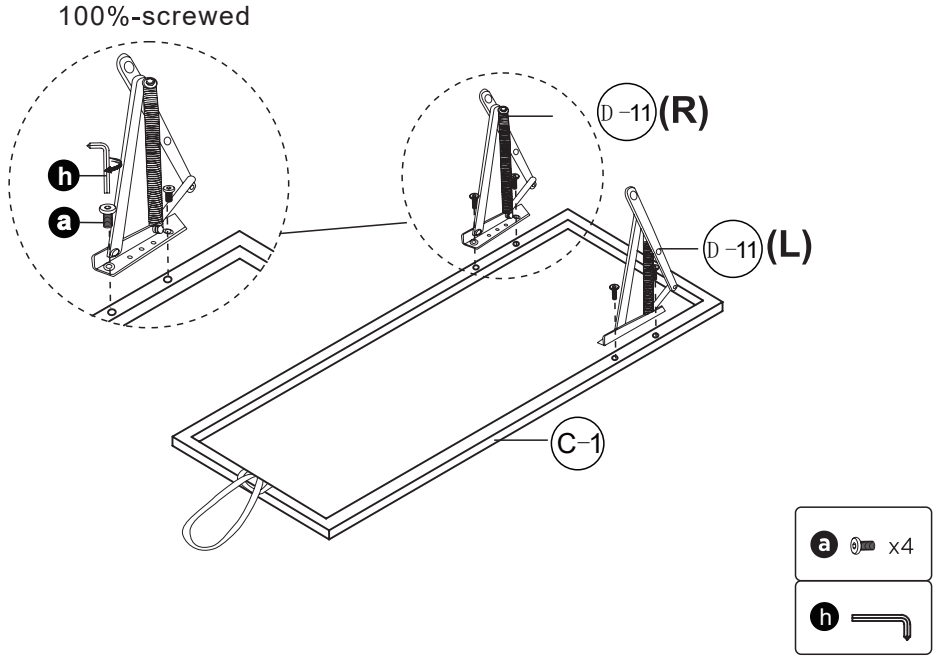

STEP 9 Attach Iron Frame & Side Panel Connector (D-11) to Side Panel (C-3) using screw (g) .

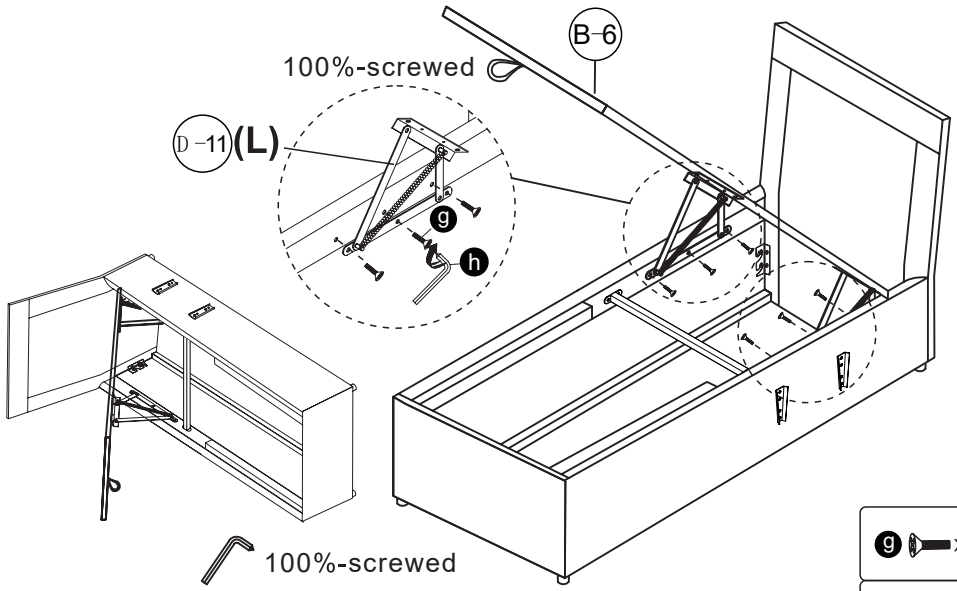

Installation is easier after tilting.

STEP 10 Secure Chaise Wooden Strips (D-5) in place using Velcro.

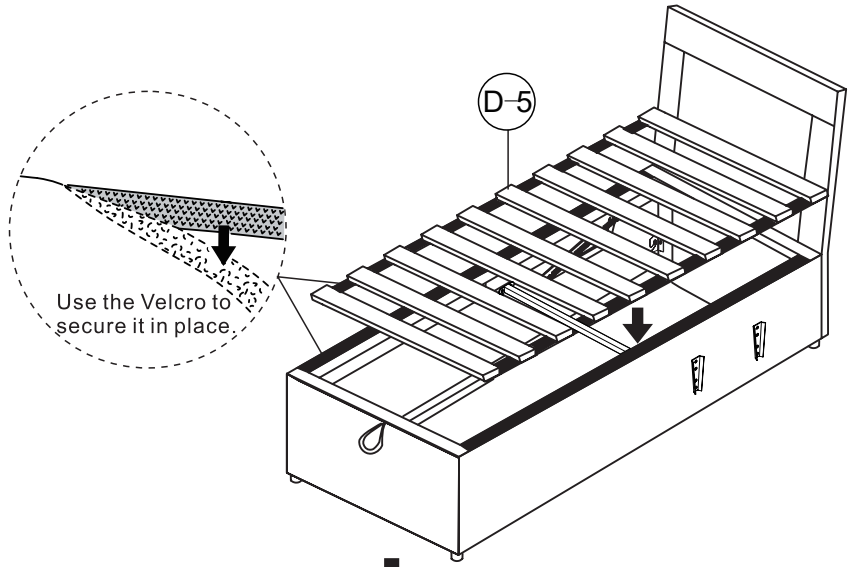

STEP 11 First, Insert the Armrest Cushion (C-5) into the Armrest (D-1) and then fit the Armrest (D-1) into the tapered socket on the Side Panel (C-3).

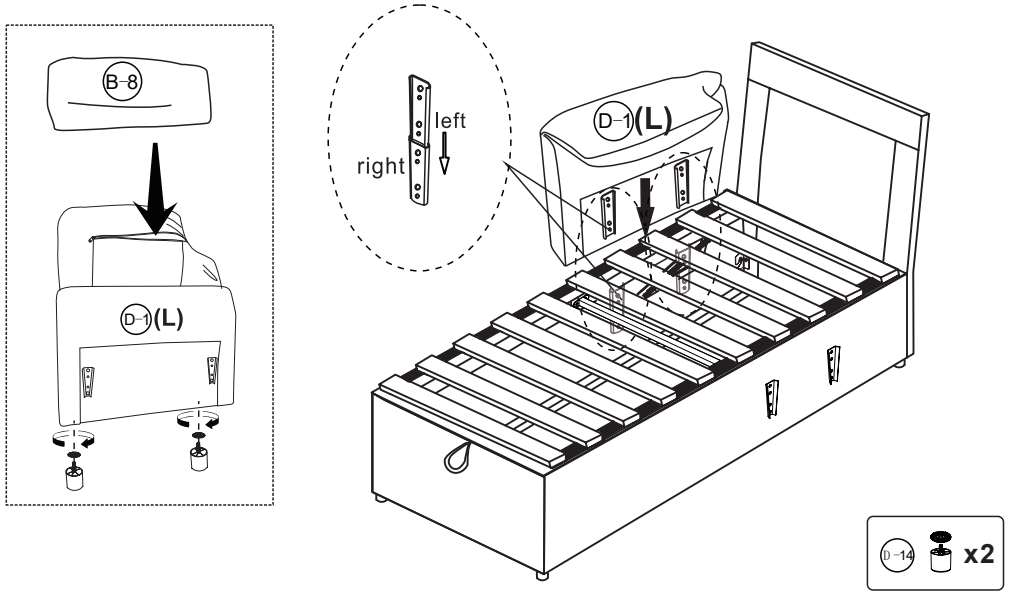



WARNING

High-tension lift! Do not remove safety straps or test the lift until seat cushions are fully installed. The frame may snap open suddenly and cause injury.

TWO SEATS

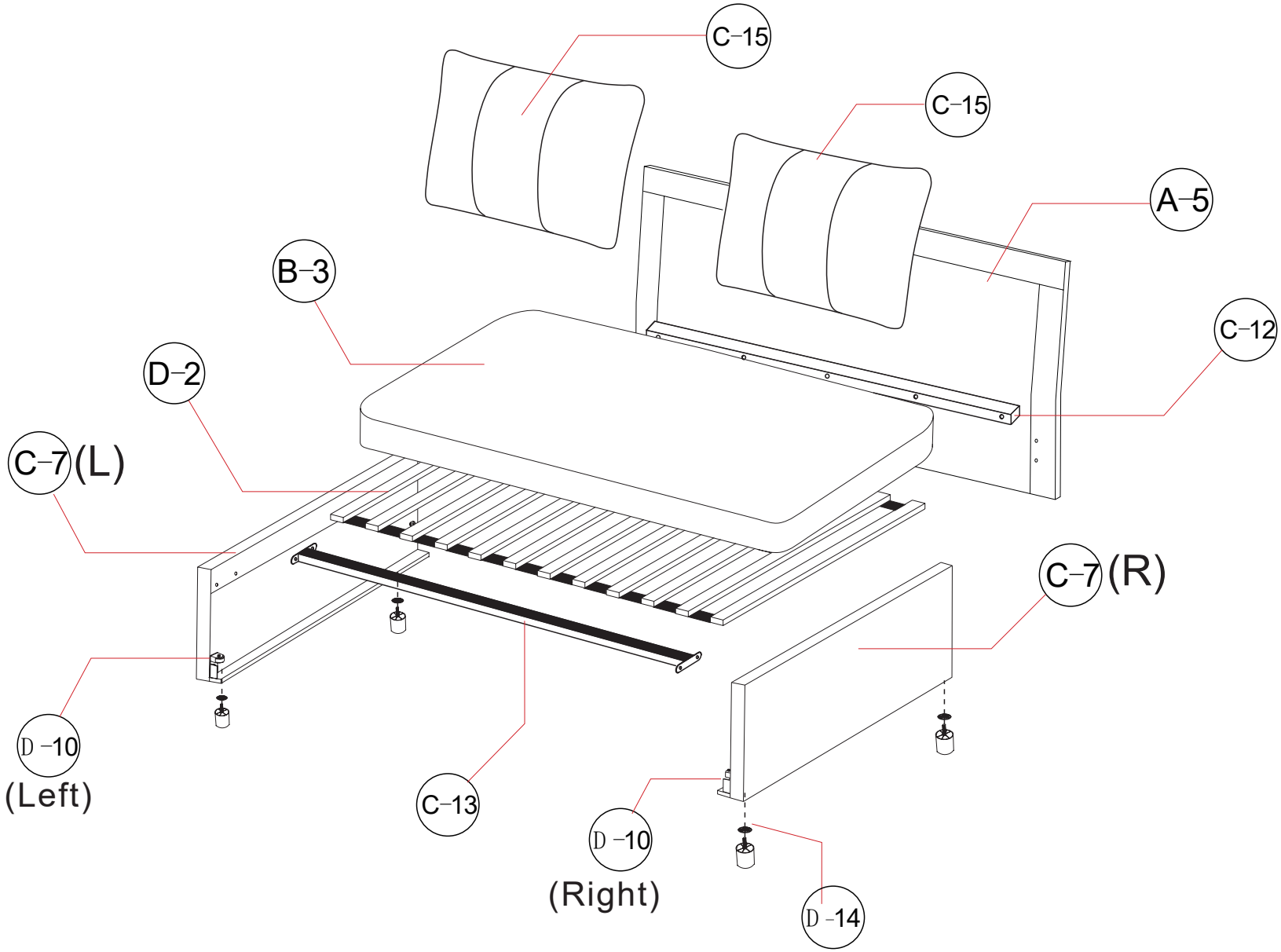

Pull-out Sofa

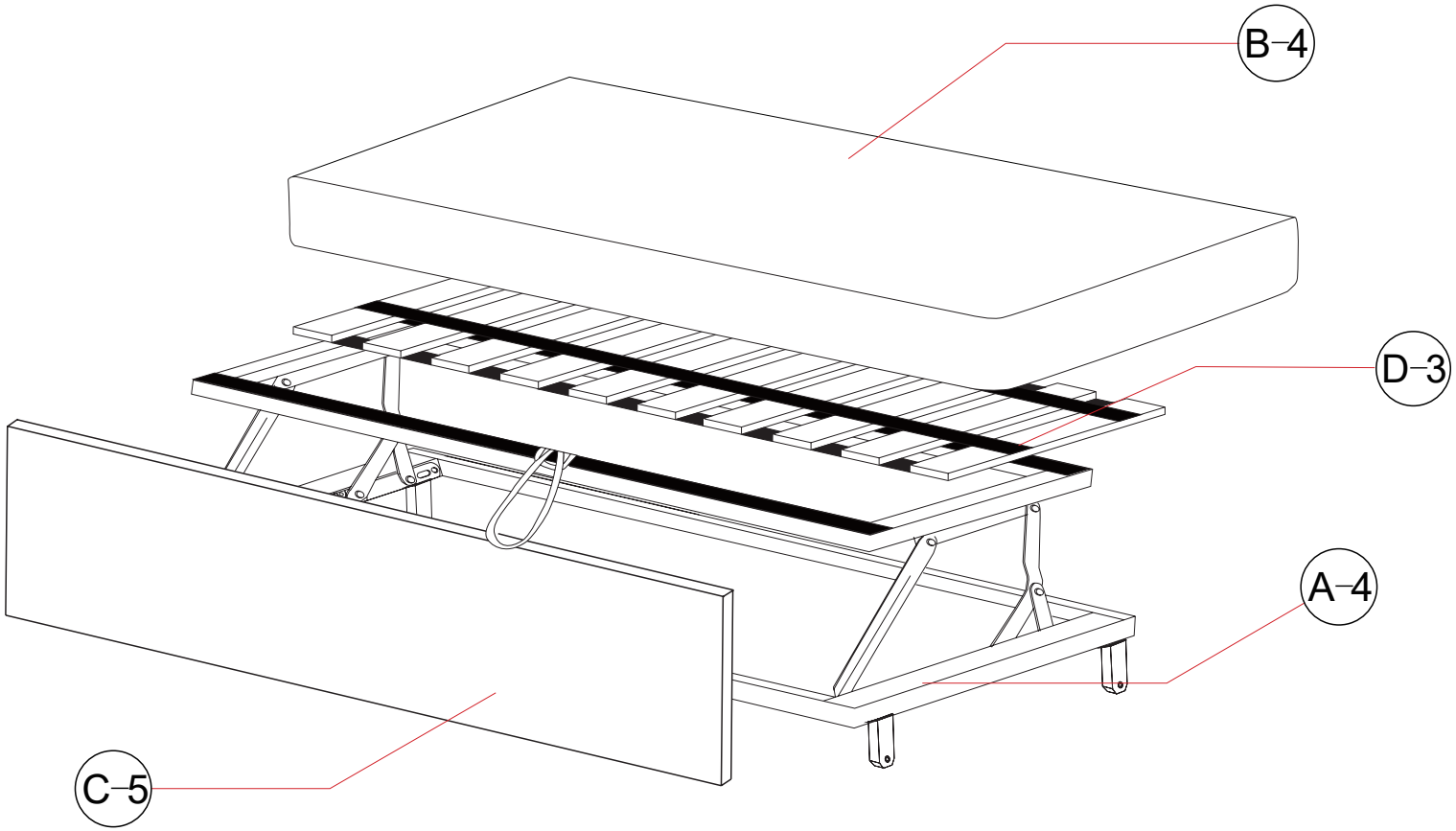

Main structure accessories

C–13 **Two-seat Iron Pipe**



x1

C–7 **Two-seat Side Panel**

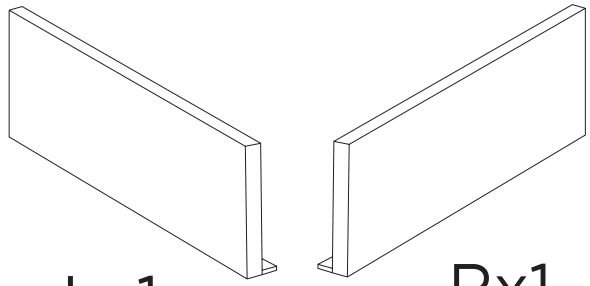

Lx1 Rx1

C–12 **Two-seat Back Iron Pipe**

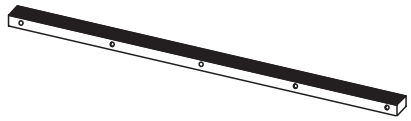

x1

A–4 **Pull-out Sofa Frame**

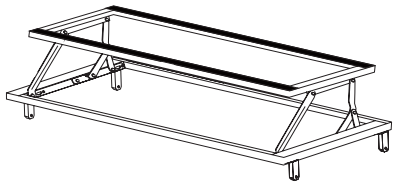

x1

A–5 **Two-seat Back Frame**

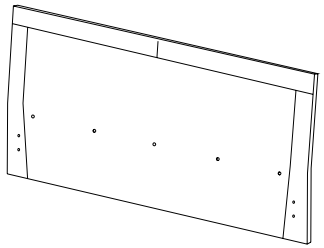

x1

C–5 **Pull-out Sofa Front Frame**

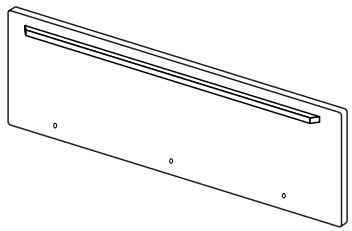

x1

C–15 **Pillow**

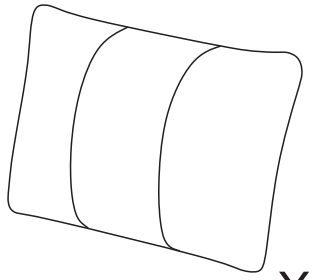

x2

B–3 **Two-seat Cushion**

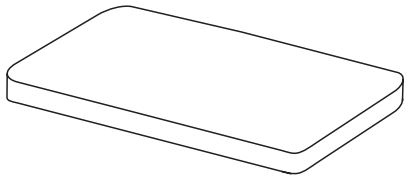

x1

B–4 **Pull-out Sofa Cushion**

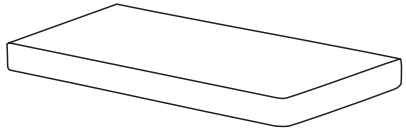

x1

D–2 **Two-seat Wooden Strips**

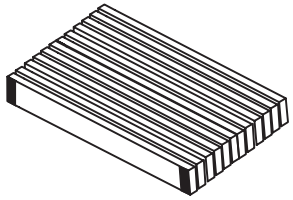

x1

D–3 **Pull-out Sofa Wooden Strips**

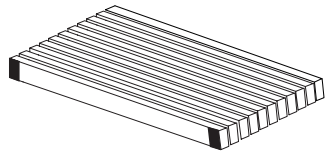

x1

Structural accessories

D-14 **Sofa leg**

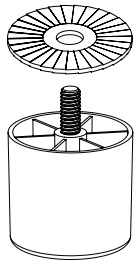

x4

D-10 **Roller**

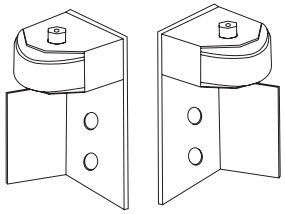

Lx1 Rx1

D-7 D-8 **Connector**

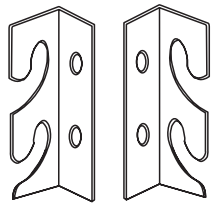

Lx1 Rx1

D-9 V-shaped connector

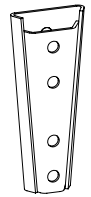

x2

Hardware parts

a **Bolt**

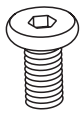

M6*20 x16

c **Bolt**

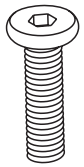

M6*40 x8

e **Bolt**

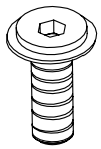

M6*20 x4

f **Bolt**

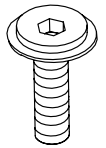

M8*20 x4

h **Allen Key**

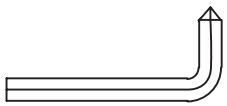

M6 x1

l **Bolt**

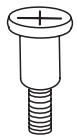

M6*40 x2

STEP 1 As shown in the diagram, secure the Two-seat Back Iron Pipe (C-12) with screws (b)in the correct order, then tighten the screws (b).

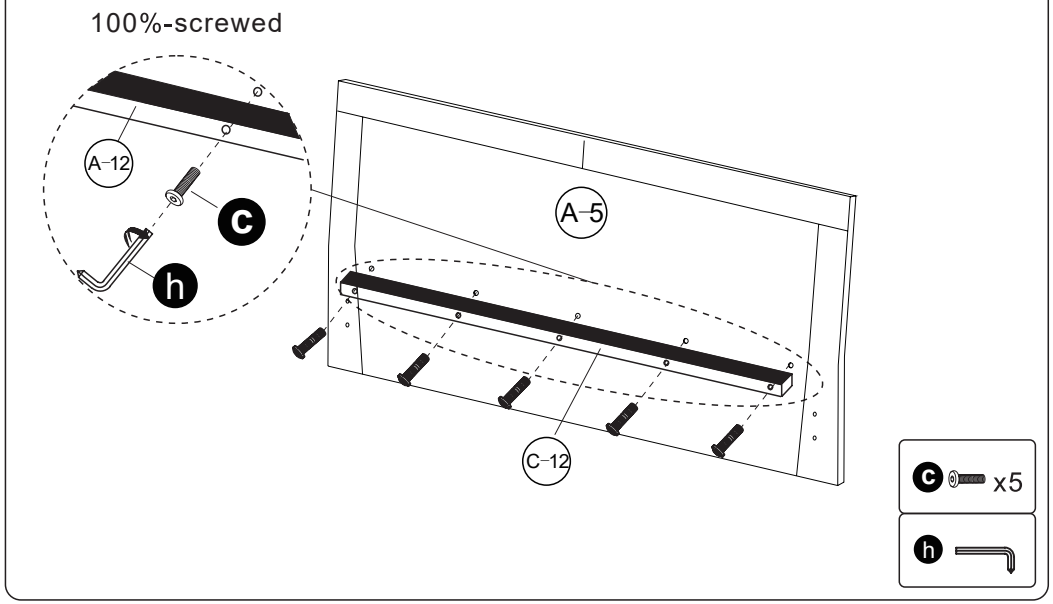

STEP 2 Attach Back Frame & Side Panel Connector to Two-seat Back Frame (A-5) using screw (g).**NOTE: Do not tighten the screws completely.**

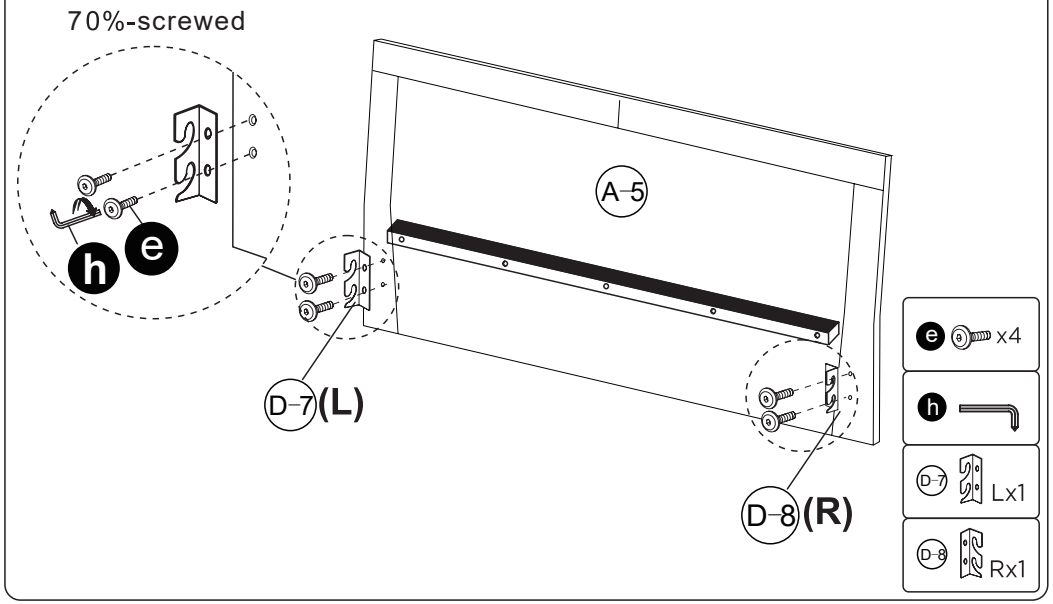

STEP 3 Attach Roller (D-10) to Two-seat Side Panel (C-7) using screw (a).

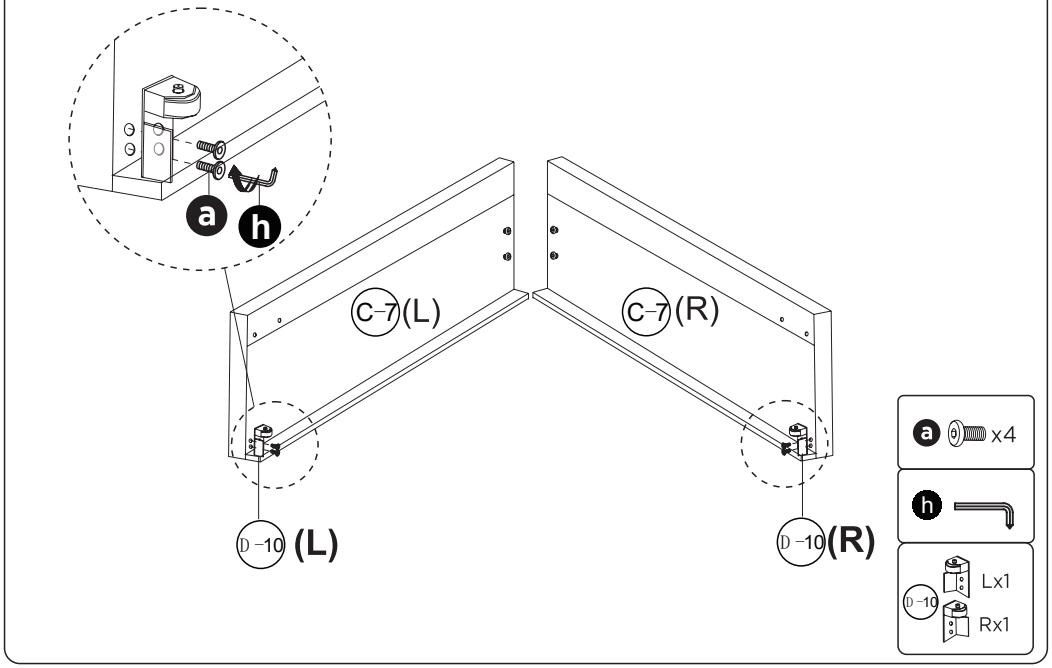

STEP 4 Screw in Legs (D-14) with Washer to Two-seat Side Panel (C-7) clockwise until secure.

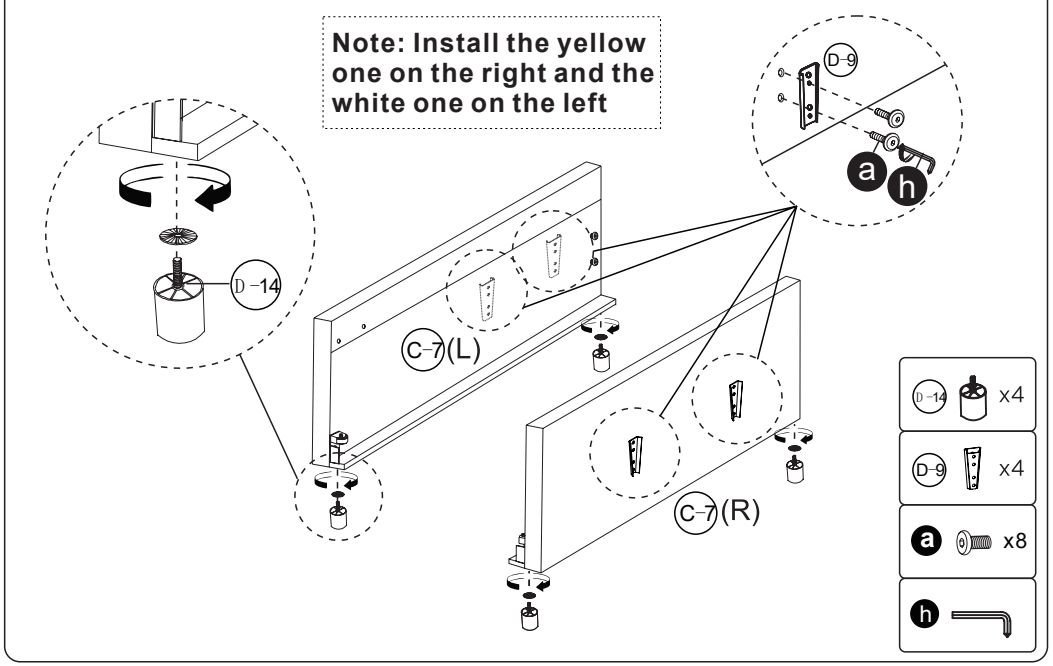

STEP 5

First, loosen the pre-installed screws on the Two-seat Side Panel (C-7), then hook it onto the Connector .

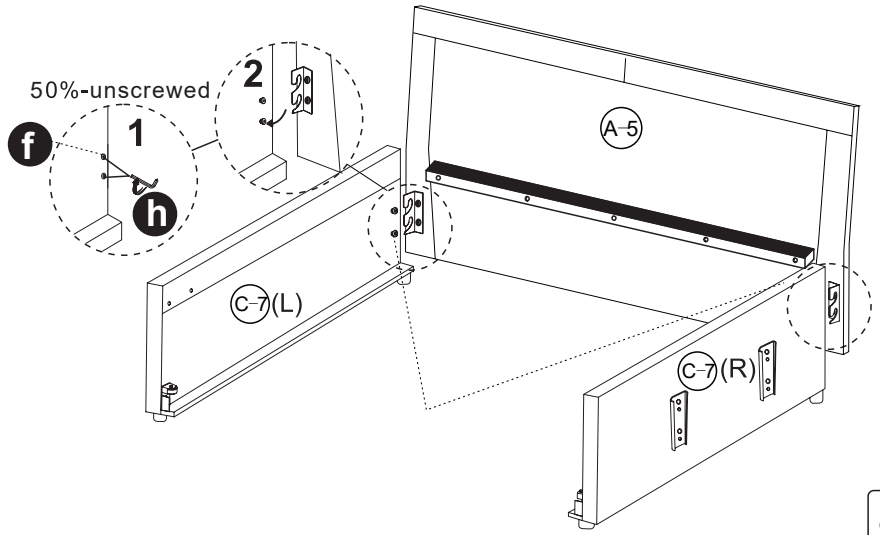

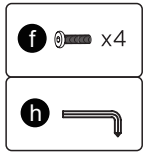

Loosen the screws at first for better engagement.

STEP 6

As shown in the diagram, secure the Two-seat Iron Pipe (C-13) to the inside of the Side Panel (C-7) using screws (a) .

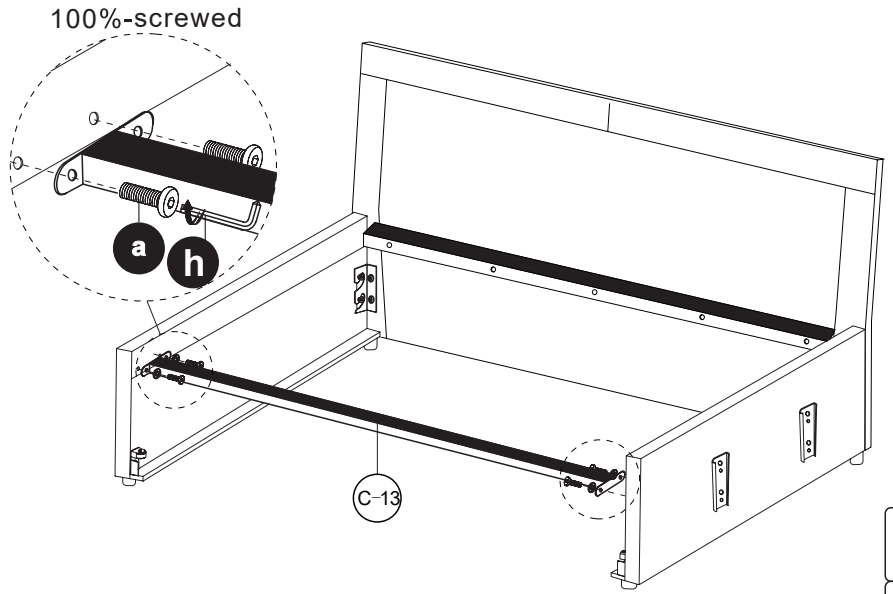

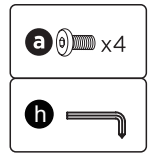

STEP 7

Secure Two-seat Wooden Strips (D-2) in place using Velcro.

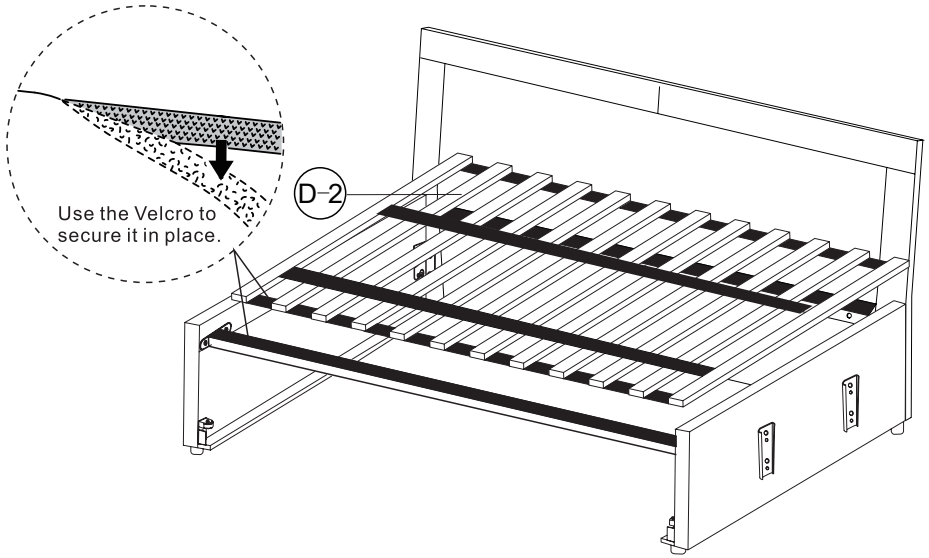

STEP 8 Attach the limit screws (I) to the pull-out sofa frame (A-4) as shown in the diagram.

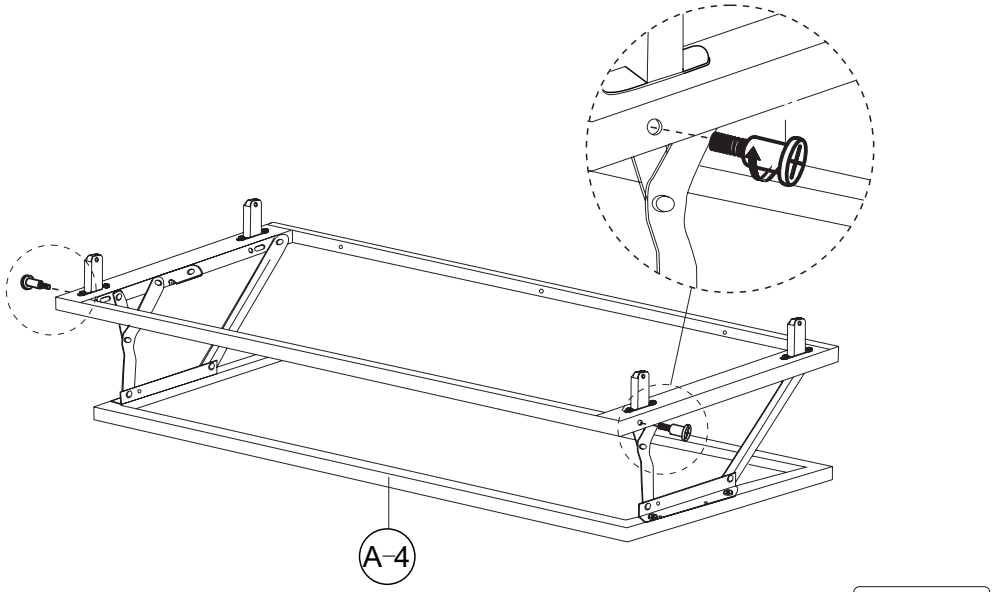

STEP 9 As shown, Attach Pull-out Sofa Front Frame (A-4) to Pull-out Sofa Frame (A-5) using screw ©.

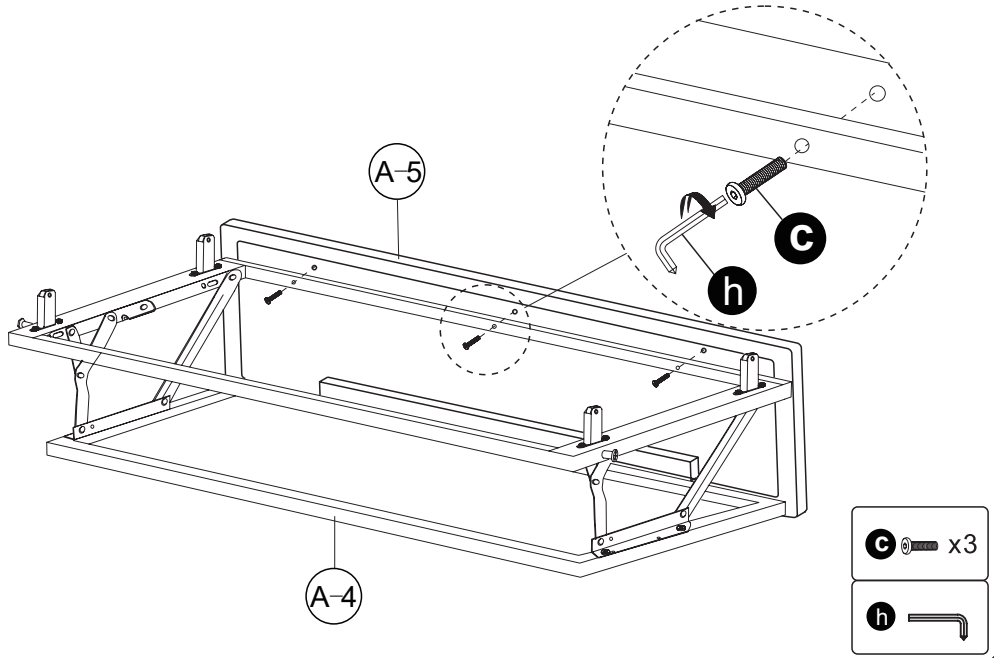

STEP 10 Secure Pull-out Sofa Wooden Strips (D-3) in place using Velcro.

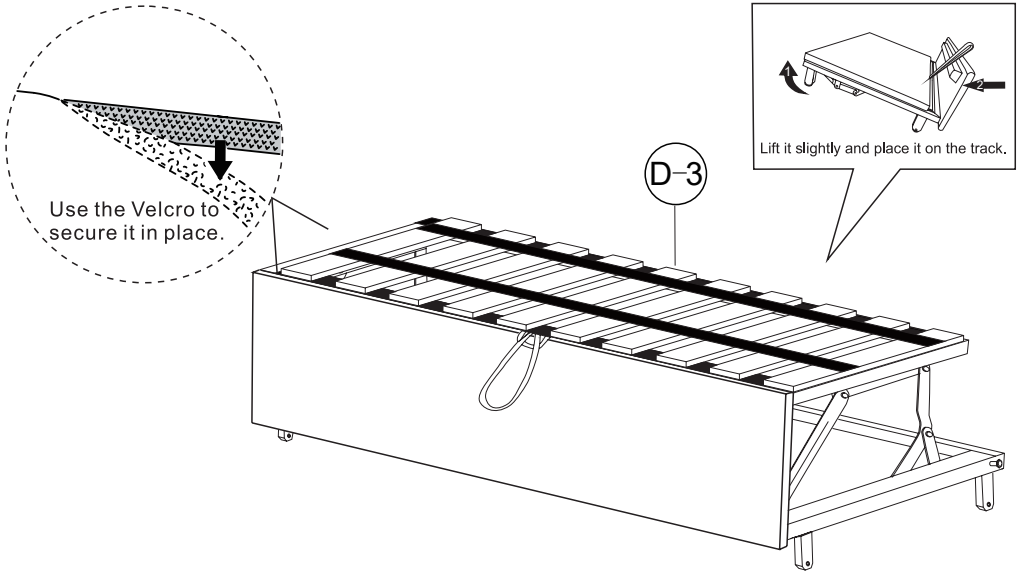

Tie the drawstring and use it to pull the drawers open and lift the supporting frame.

STEP 11 Slightly lift up the assembled frame and slide the assembled pull-out part into position.

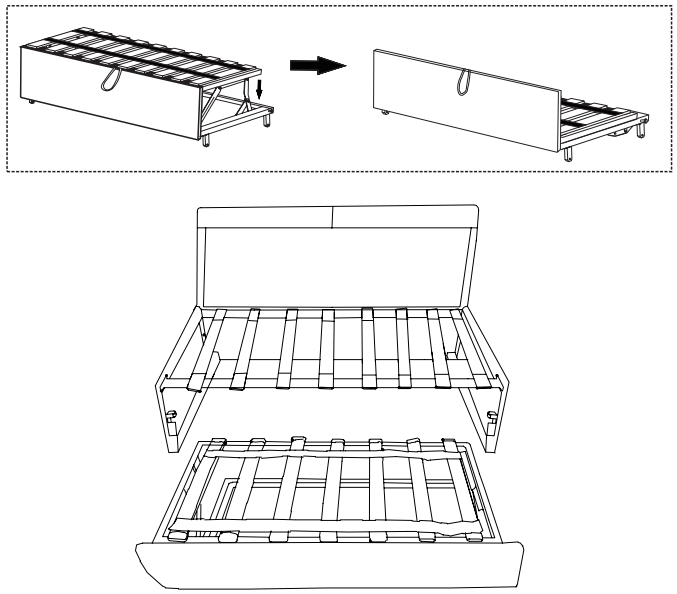

Corner-seat

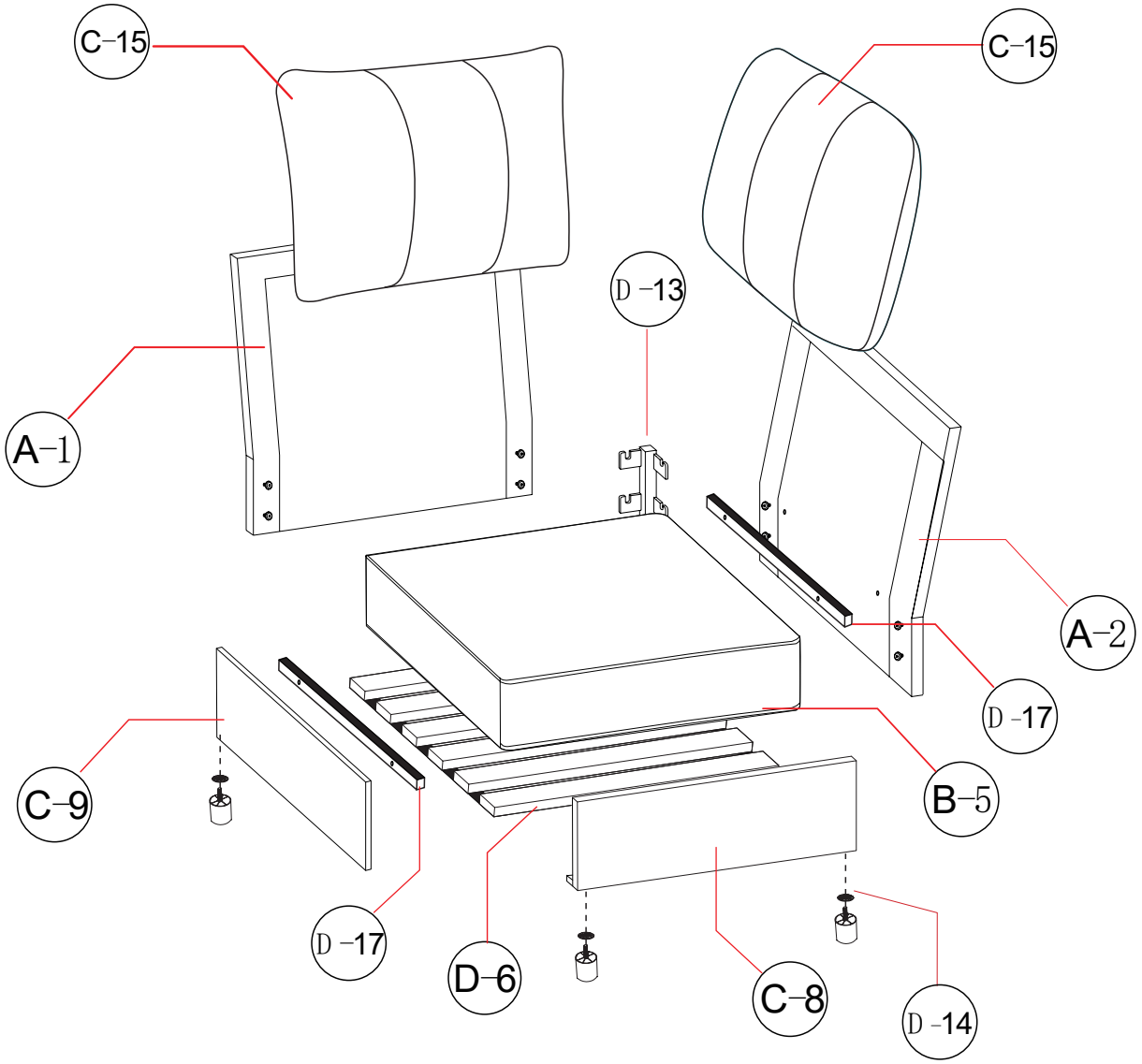

Main structure accessories

A-1 Corner-seat Back Frame

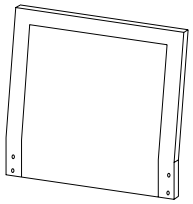

x1

A-2 Corner-seat Back Frame

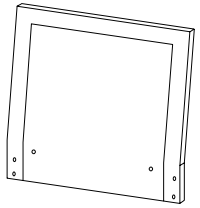

x1

C-8 Corner-seat Side Panel

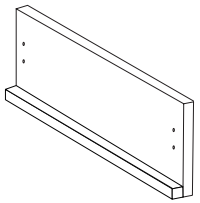

x1

C-9 Corner-seat Side Panel

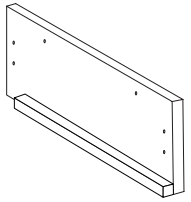

x1

D-13 Connector

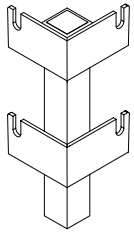

x1

B-5 Corner-seat Cushion

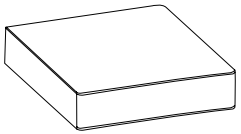

x1

D-17 Corner-seat Iron Pipe



x2

C-15 Pillow

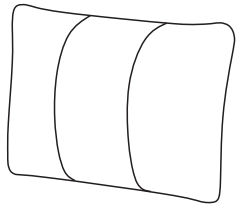

x2

D-6 Corner-seat Wooden Strips

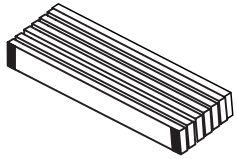

x1

Structural accessories

D-9 V-shaped connector

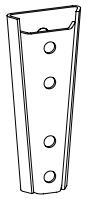

x2

D-7 D-8 Connector

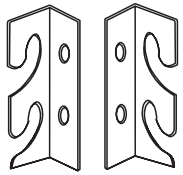

x2 Rx1

D-14 Sofa leg

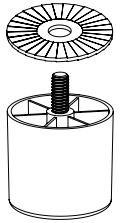

x3

Hardware parts

a Bolt



M6*20 x8

c Bolt

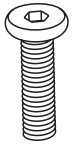

M6*40 x4

e Bolt

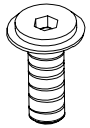

M6*20 x8

f Bolt

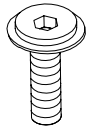

M8*20 x8

h Allen Key



M6 x1

STEP 1

As shown in the picture, the Connector will be fixed on both sides of the Back Frame, Do not tighten the screws completely.

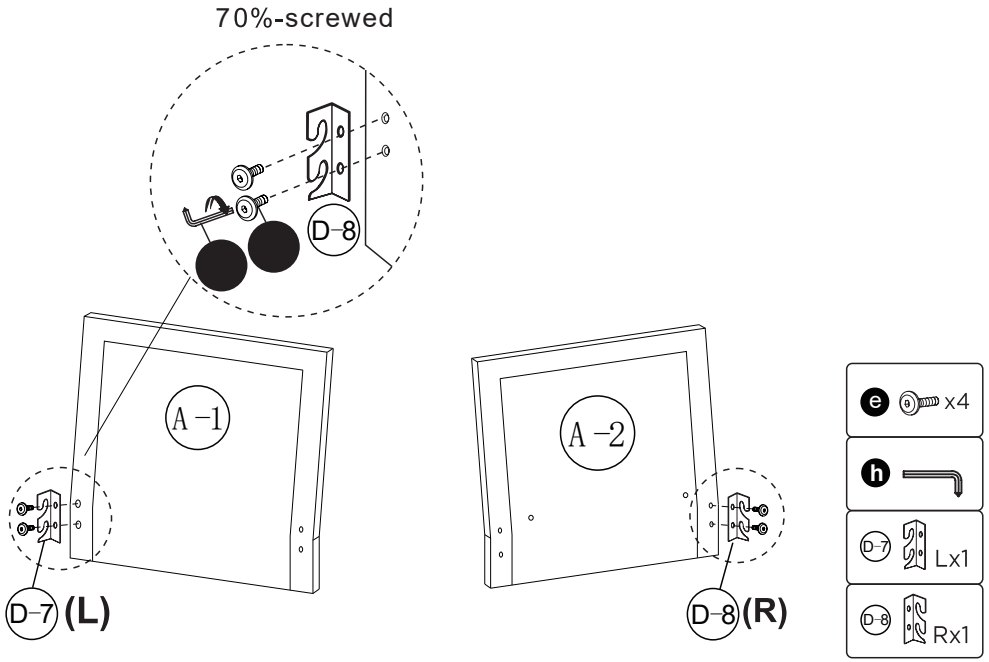

STEP 2

As shown in the figure, screw the screws into the corresponding positions and do not tighten them.

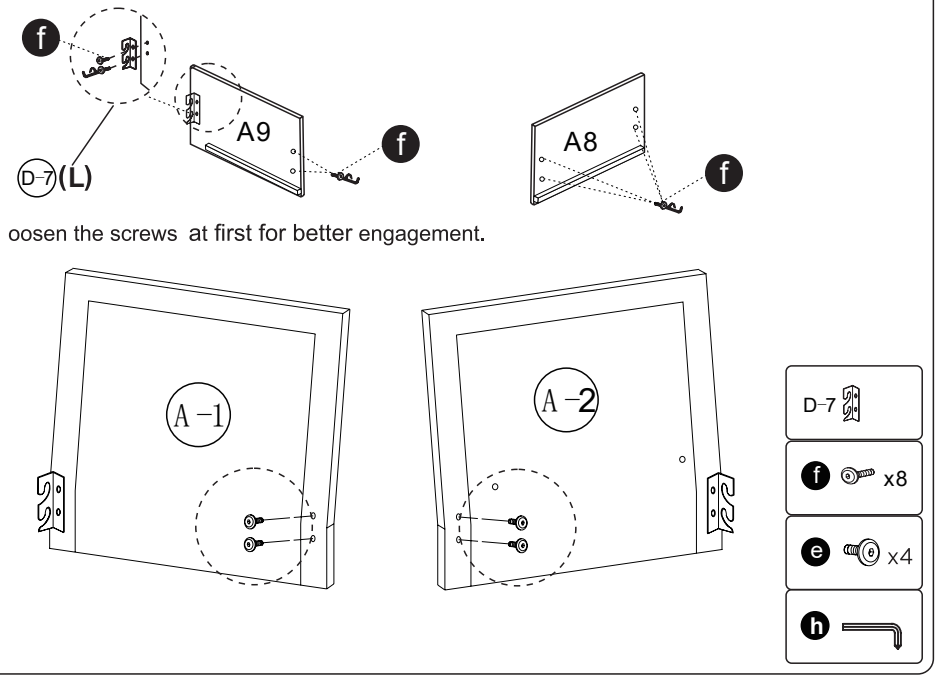

STEP 3

Secure the Corner-seat Iron Pipe to the Corner-seat Back Frame and screw in tightly.

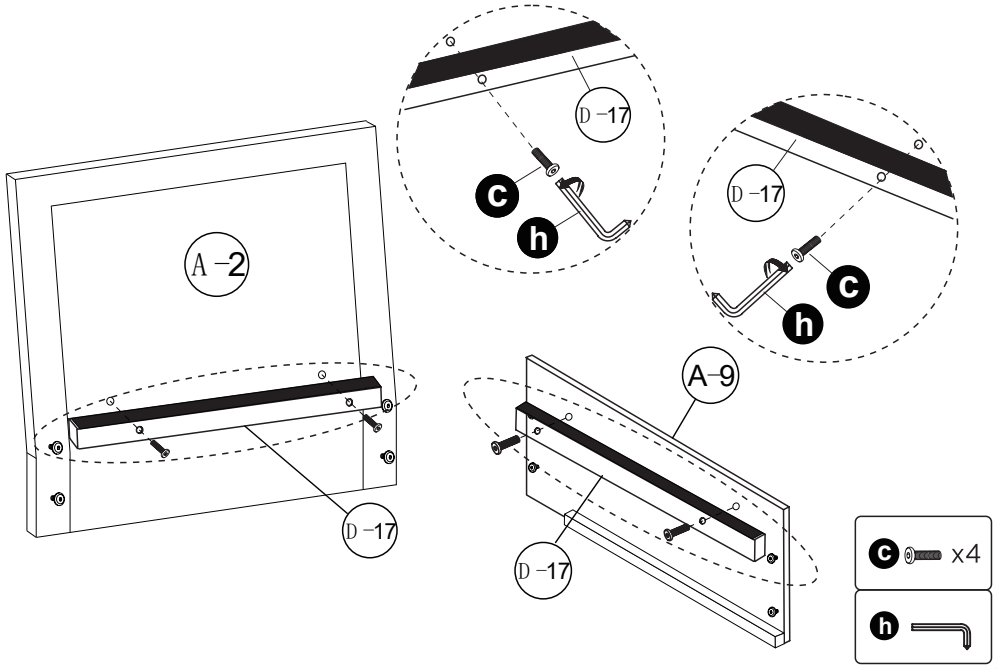

STEP 4

Secure the Sofa leg under the Two-seat Side Panel

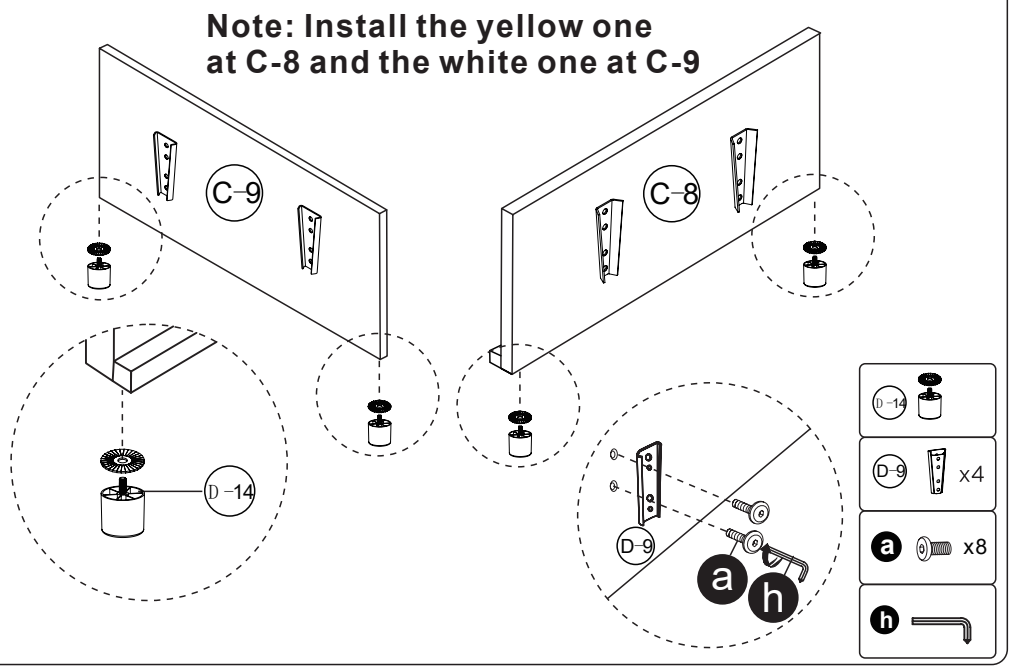

STEP 5 Connect the two Corner-seat Back Frame with the Connector(D14), and adjust the corresponding screws if you can't install it.

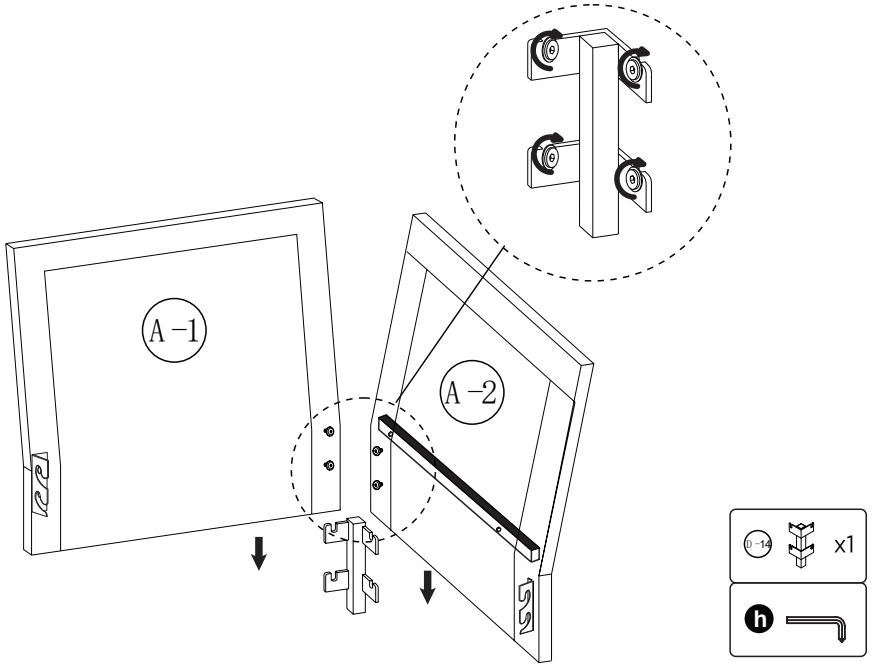

STEP 6 Loosen the pre-installed screws of the Corner-seat Side Panel first, hang it on the Connector, and then lock the screws.

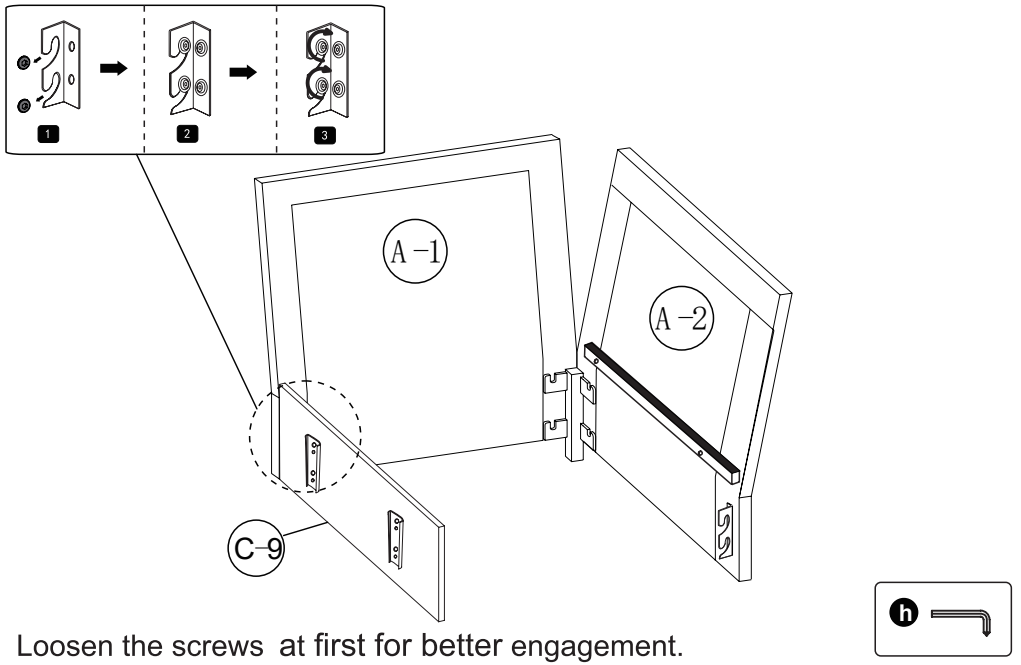

Loosen the screws at first for better engagement.

STEP 7 Loosen the pre-installed screws of the Corner-seat Side Panel first, hang it on the Connector, and then lock the screws.

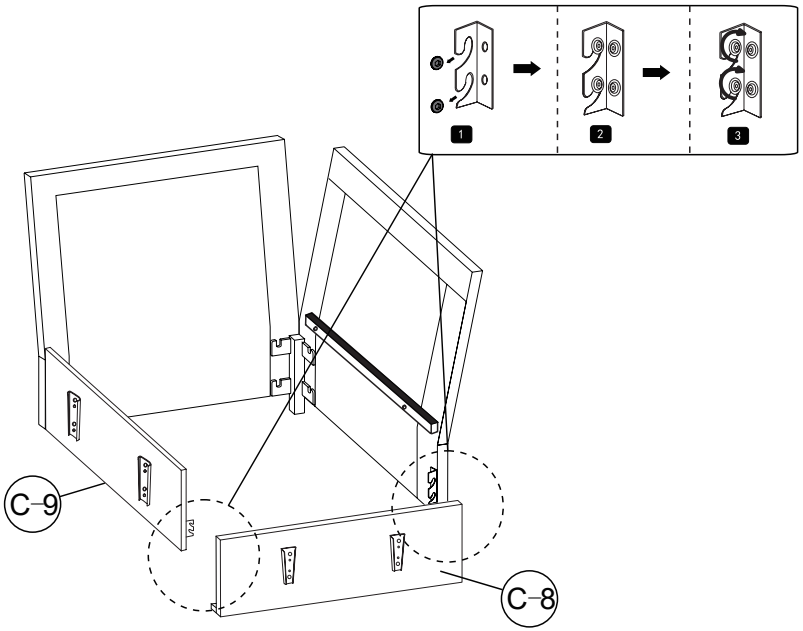

Loosen the screws at first for better engagement.

STEP 8 Attach the Wooden Strips to the iron frame with Velcro.

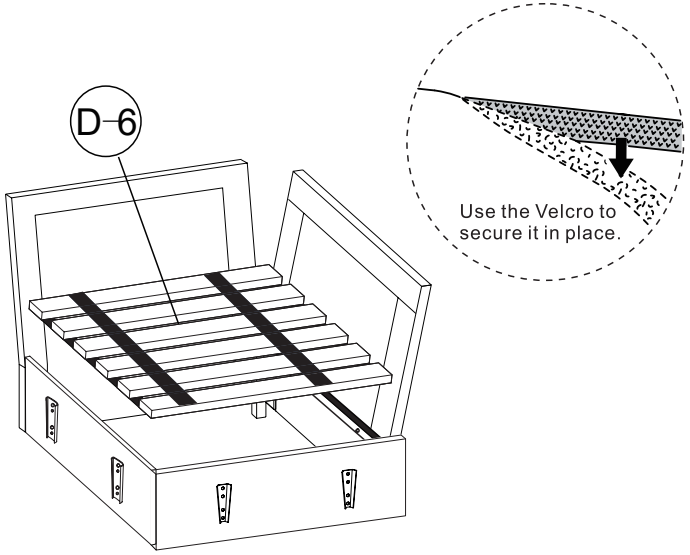

STEP 9 Adjust the backrests and Wooden Strips so that the parts are tightly connected.

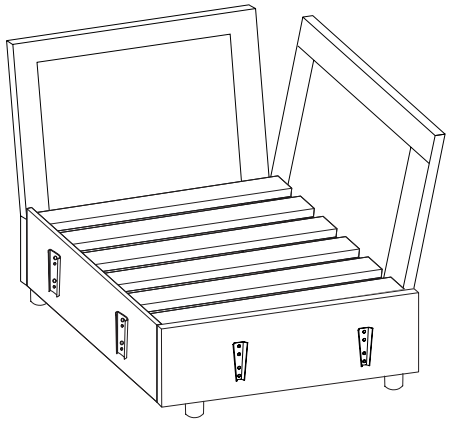

STEP 10 Place the Cushion and Pillow to complete the installation.

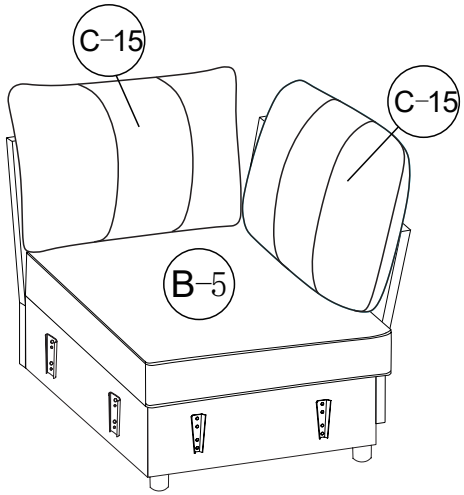

Two-seat

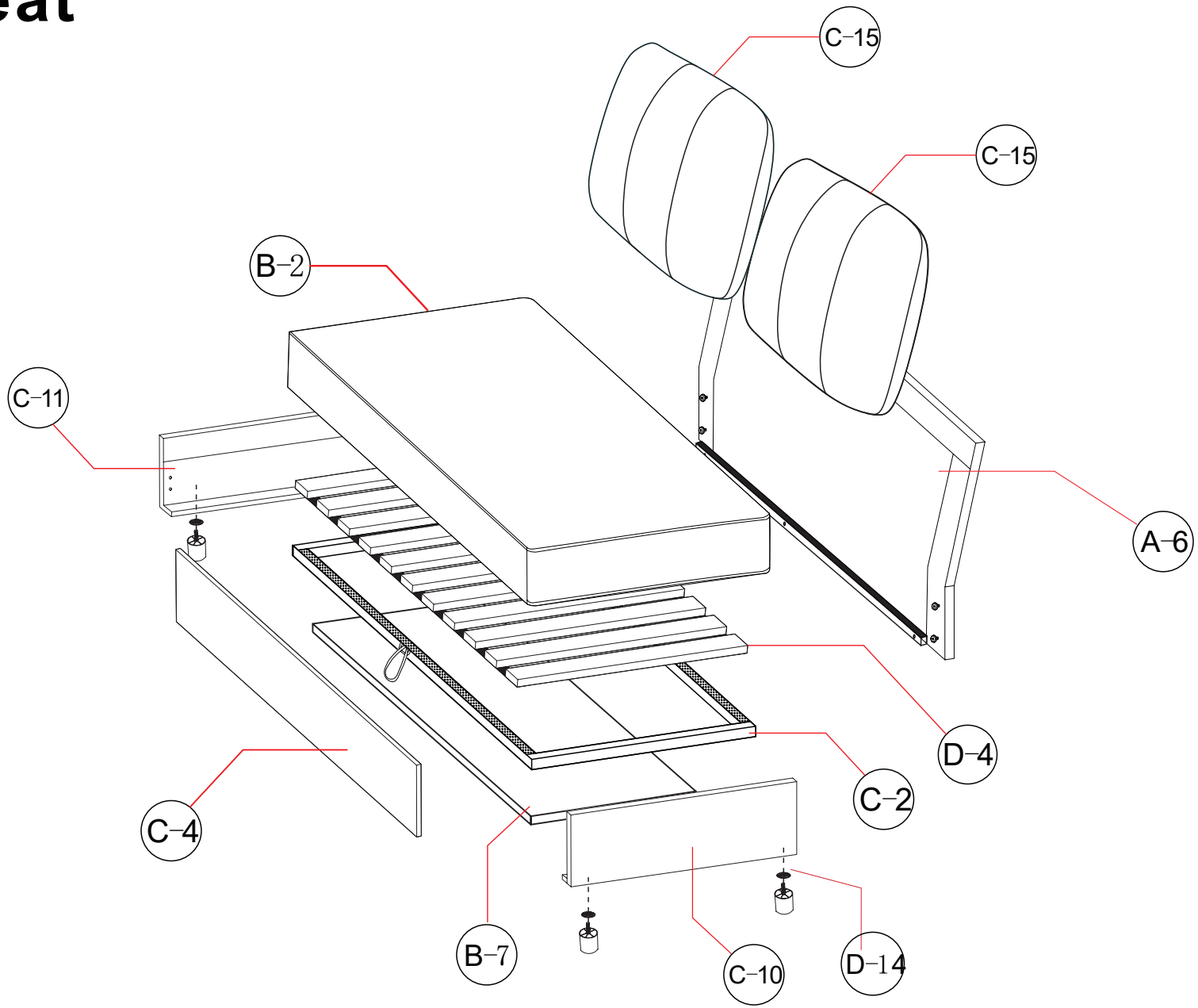

Main structure accessories

C-2 Storage Iron Frame

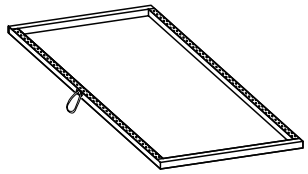

x1

A-6 Two-seat Back Frame

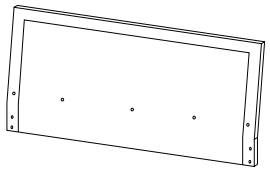

x1

C-4 Two-seat Front Panel

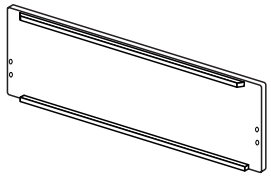

x1

C-11 Two-seat Side Panel

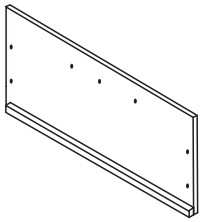

x1

C-10 Two-seat Side Panel

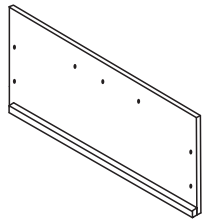

x1

B-2 Two-seat Cushion

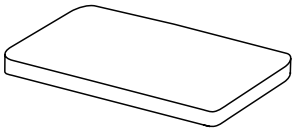

x1

D-4 Storage Wooden Strips

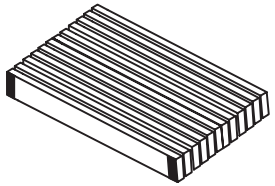

x1

B-7 Storage Bottom Panel

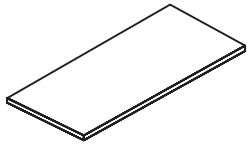

x1

C-15 Pillow

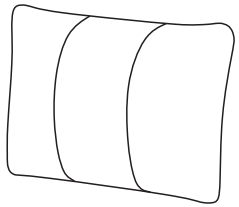

x2

D-1

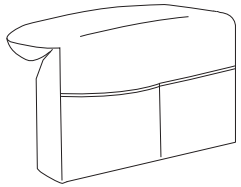

Rx1

Structural accessories

D–7 D–8 **Connector**

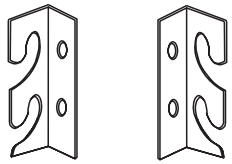

Lx2 Rx2

D–12 **Connector**

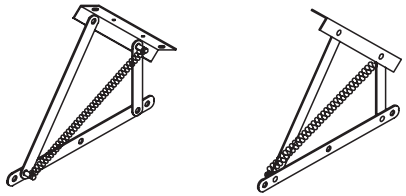

Lx1 Rx1

D–14 **Sofa leg**

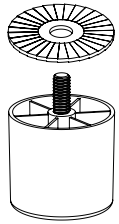

x6

D–9 V-shaped connector

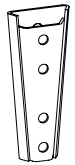

x2

Hardware parts

a **Bolt**



M6*20 x12

h **Allen Key**

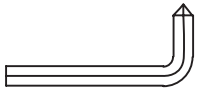

M6 x1

e **Bolt**

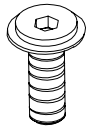

M6*20 x4

f **Bolt**

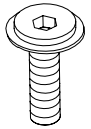

M8*20 x12

g **Bolt**

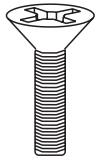

M6*20 x6

STEP 1

As shown in the picture, the Connector will be fixed on both sides of the Back Frame, Do not tighten the screws completely.

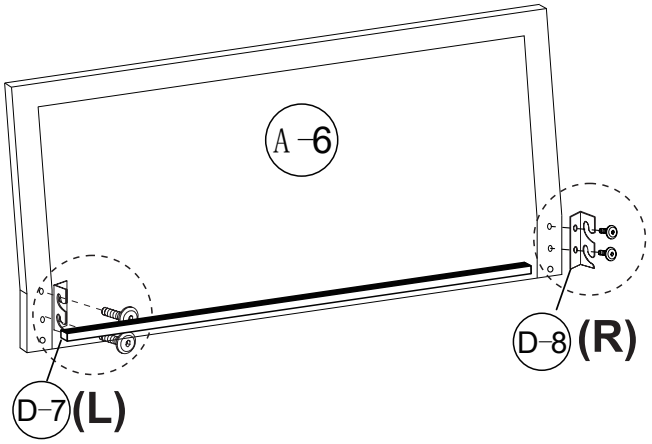

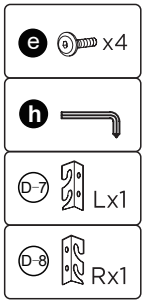

STEP 2

As shown in the figure, screw the screws into the corresponding positions and do not tighten them.

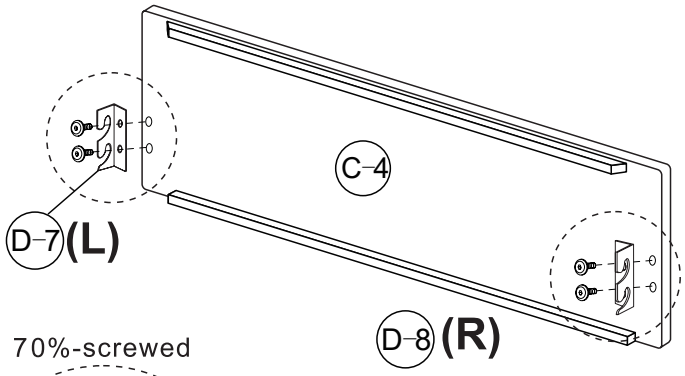

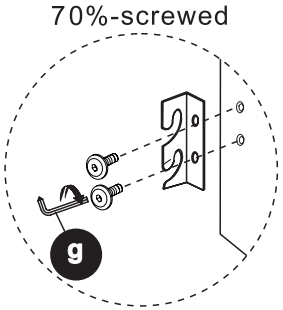

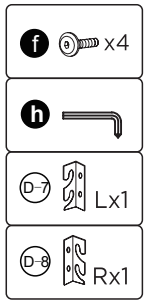

STEP 3

As shown in the figure, screw the screws into the corresponding positions and do not tighten them.

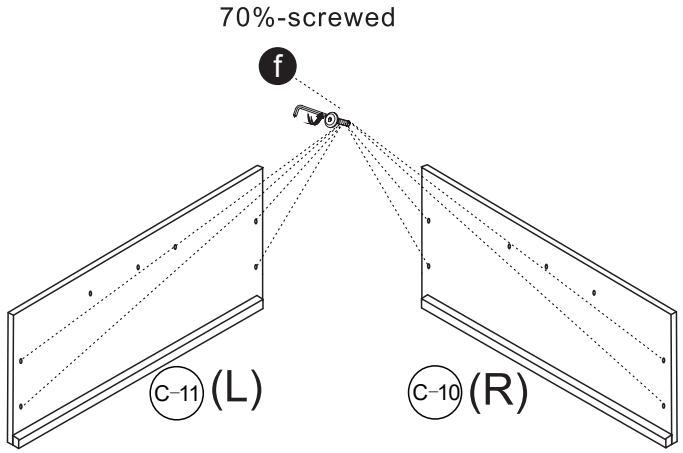

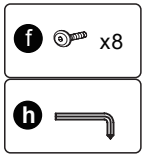

STEP 4

As shown in the figure, screw the screws into the corresponding positions and do not tighten them.

Note: Install the yellow one at A-10 and the white one at A-11

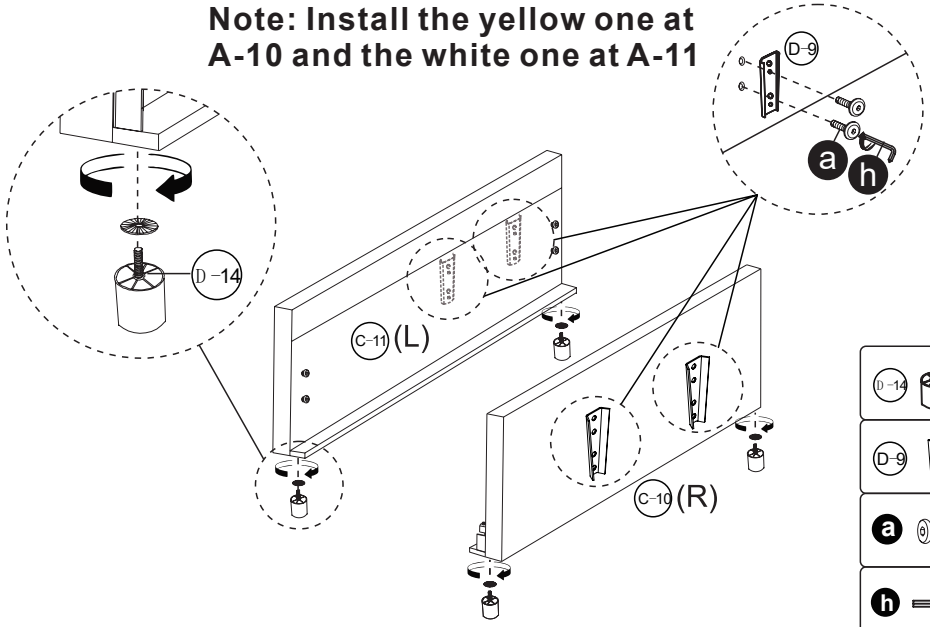

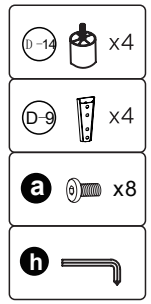

STEP 13
Fix the Iron Pipe between the two Connector.

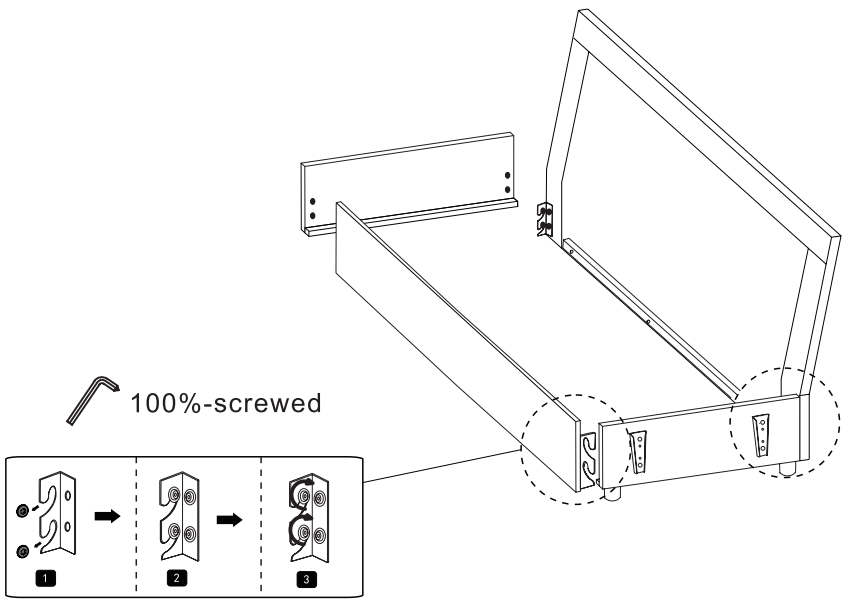

STEP 14
Attach the Wooden Strips to the iron frame with Velcro.

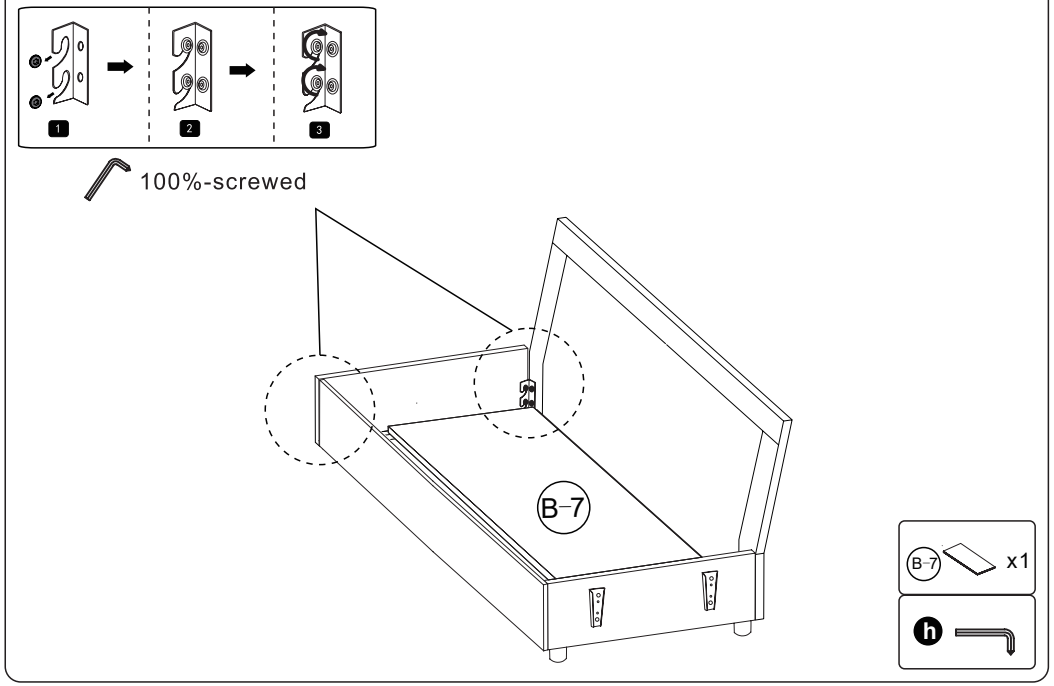

STEP 15
As shown in the diagram, attach Iron Frame & Side Panel Connector (D-12) to Storage Iron Frame (A-2) using screw (a), and attach the drawstring.

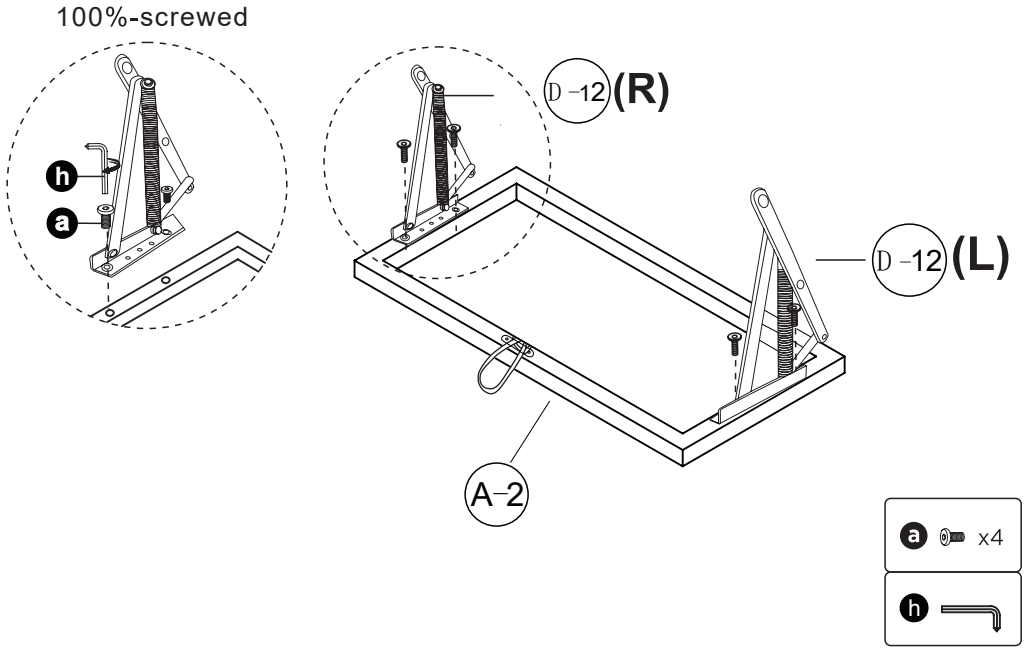

STEP 16
Attach Iron Frame & Side Panel Connector (D-12) to Side Panel using screw (g) .

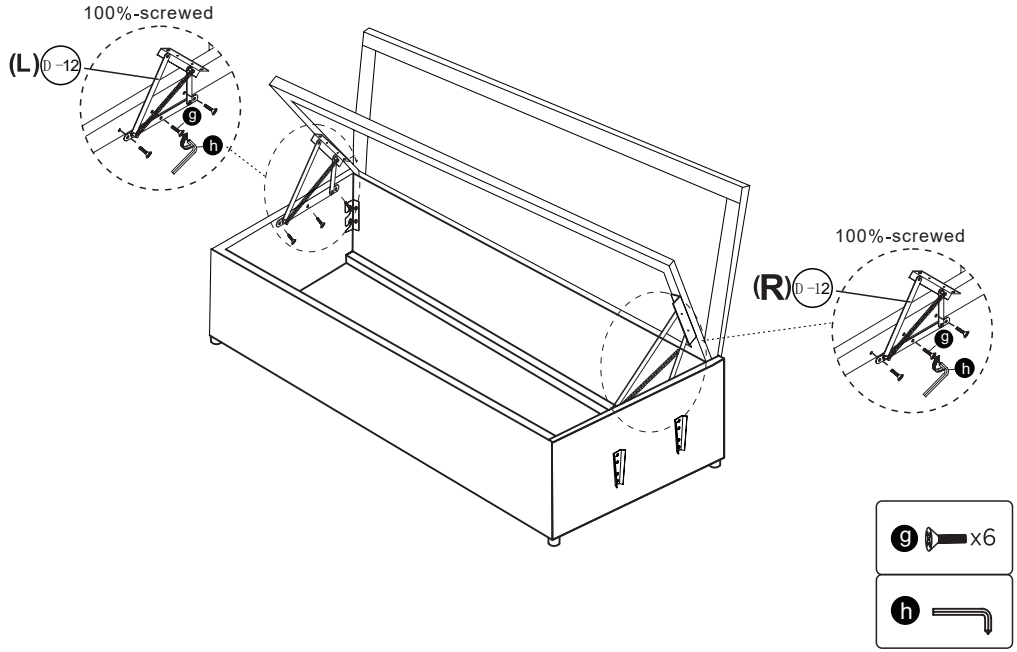

STEP 13 Adjust the backrests and Wooden Strips so that the parts are tightly connected.

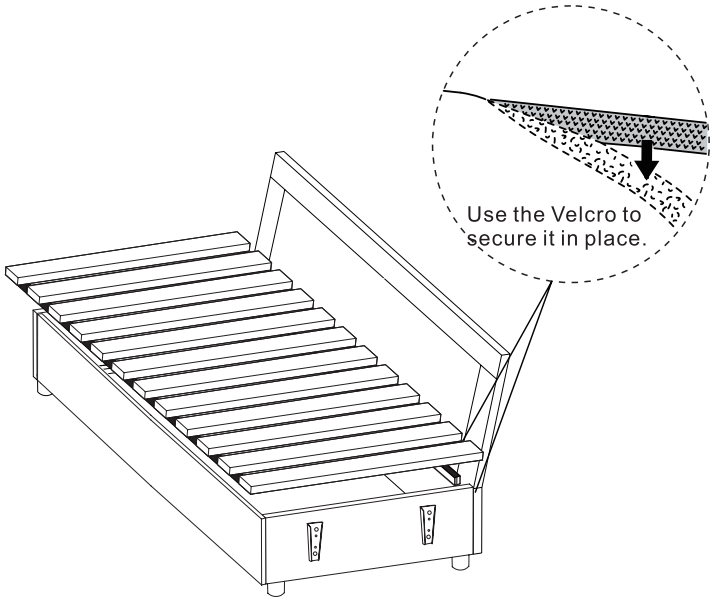





Dangerous

The top panel might bounce and cause injury before assembling the seat cushion, please be careful during assembling.

STEP 14 Place the Cushion and Pillow to complete the installation.

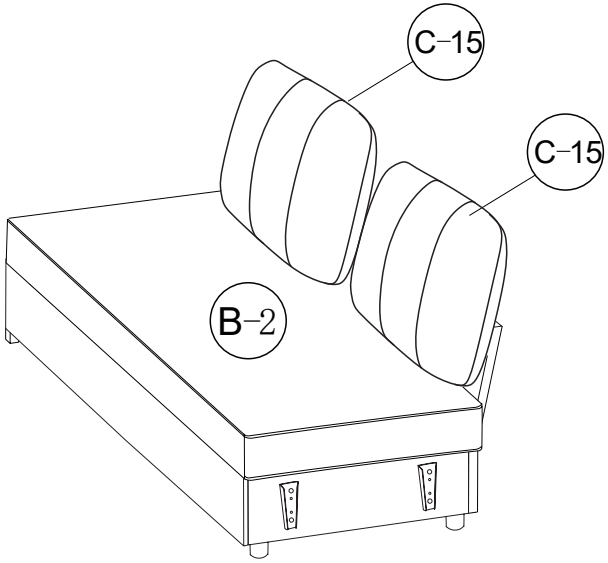

STEP 15 Screw in Legs (D-14) with Washer to Armset (D-1) clockwise until secure.

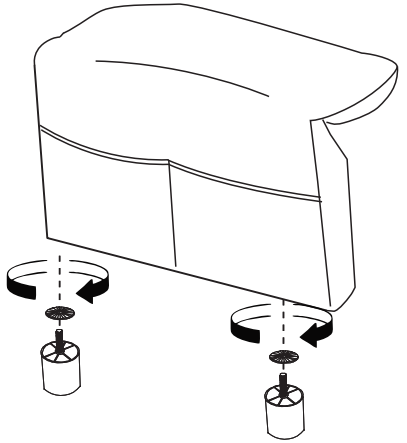

STEP 1 Align & Hook: Attach the assembled Chaise frame to the Two-Seat frame using the pre-installed insert connectors.

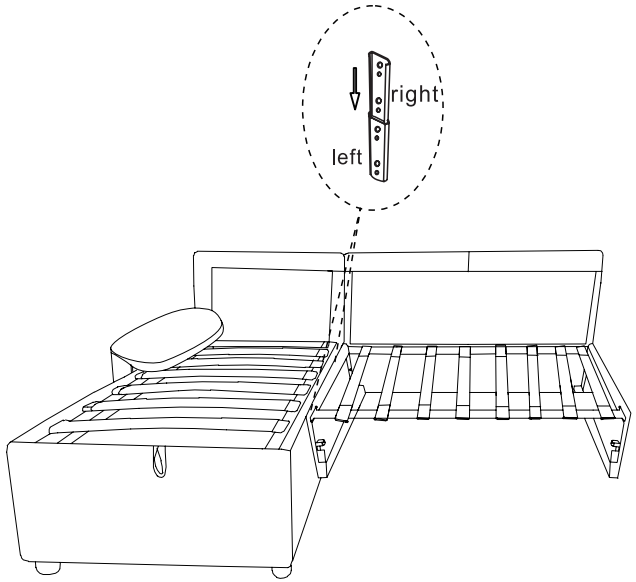

STEP 2 Slide In: Slightly lift up the assembled frame and slide the pull-out section into its track.

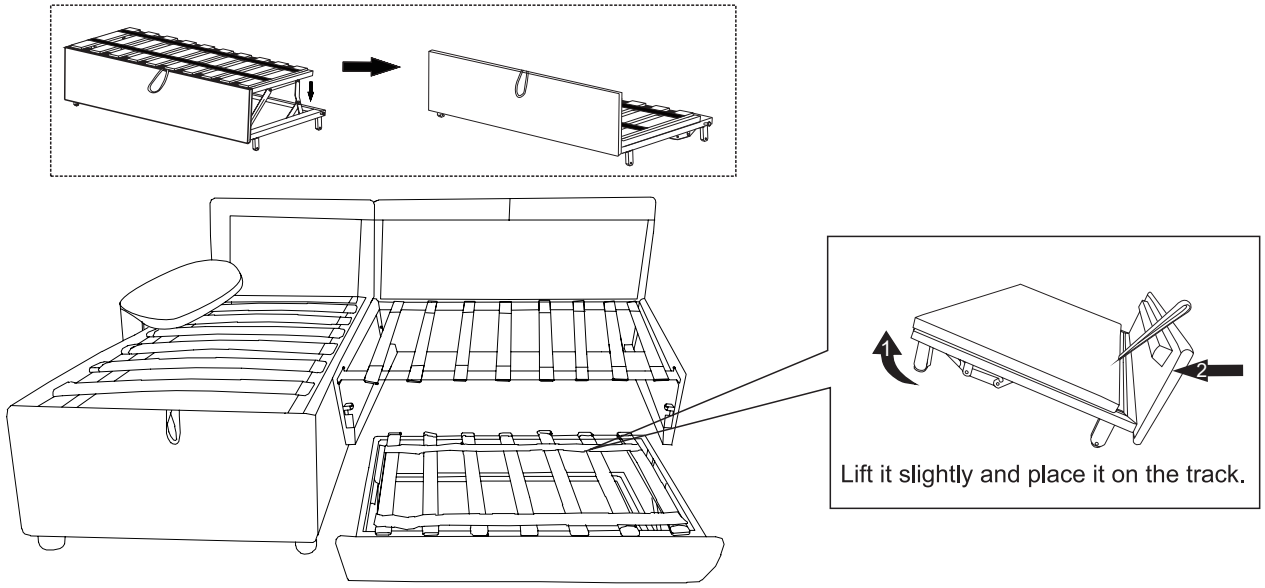

STEP 3 Pull out the sofa to place cushion.

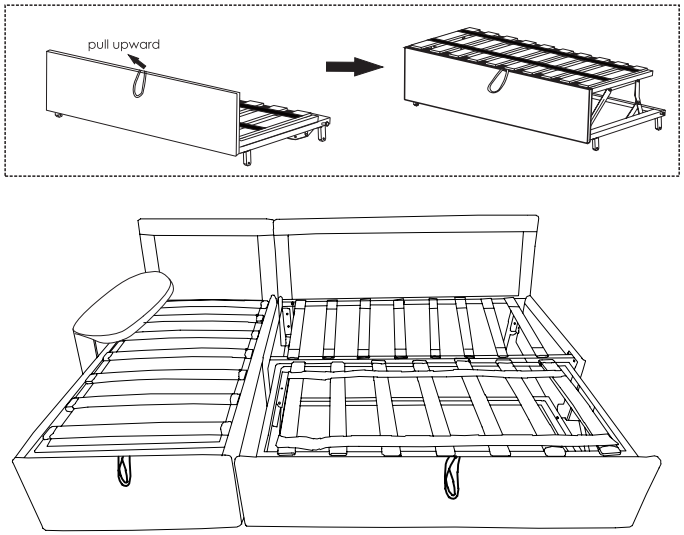

STEP 4 If you confirmed the sofa frame fits your space and are satisfied with this product. then just go ahead to open the vacuum.

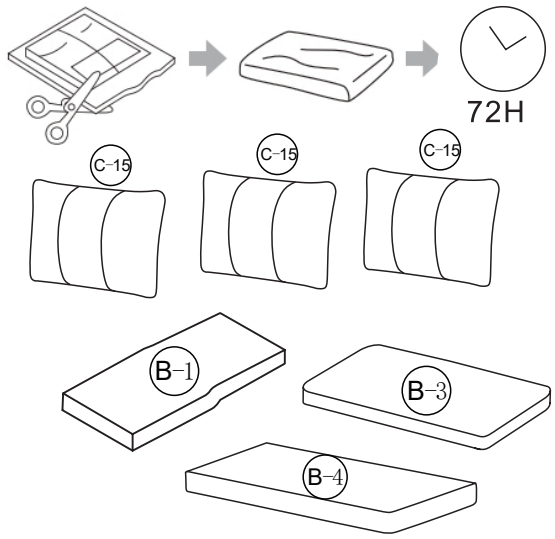

STEP 5 Finish: Place all seat cushions and back pillows as shown. (Note: Use the Velcro to secure cushions in place).

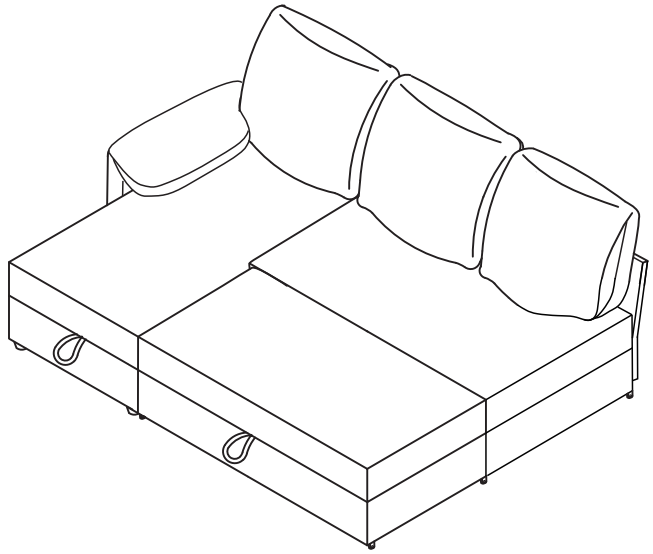

STEP 6 Attach the assembled corner frame to the two-seat frame using the insert connectors on their side panels.

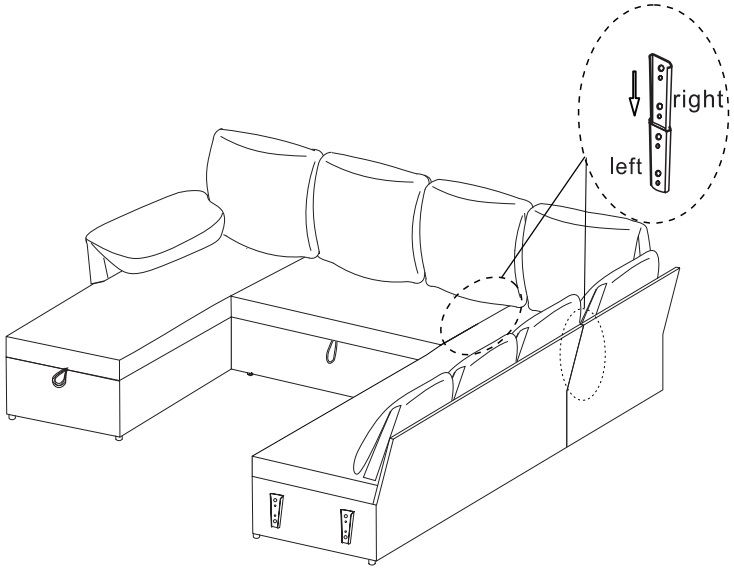

STEP 7 Attach the assembled corner frame to the storage frame using the insert connectors on their side panels.

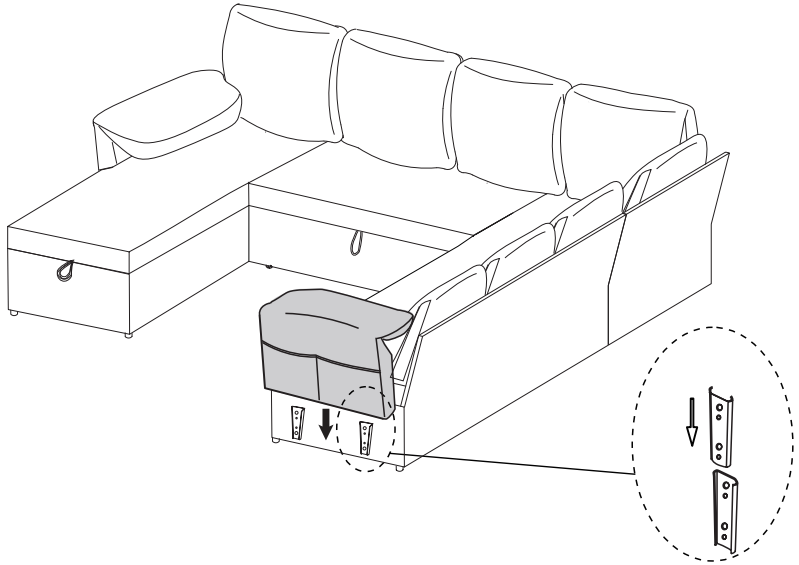

STEP 8 Assembly completed

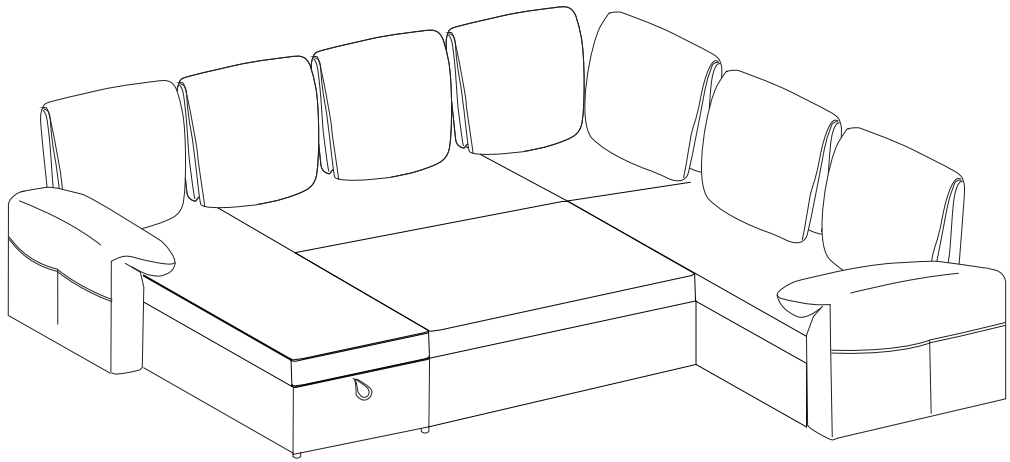



Customer Support:
support@mkxliving.com