FX-LSTSGX044_V1.0

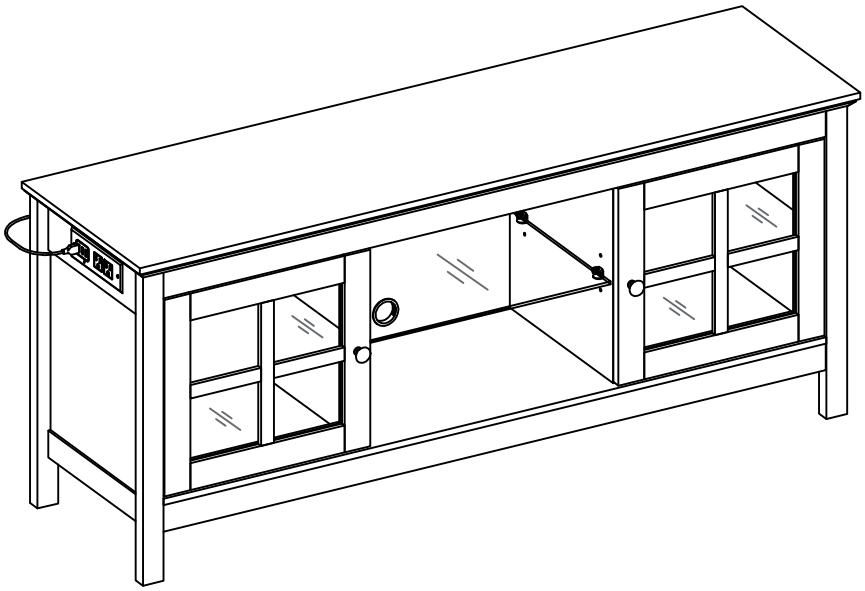

Option A

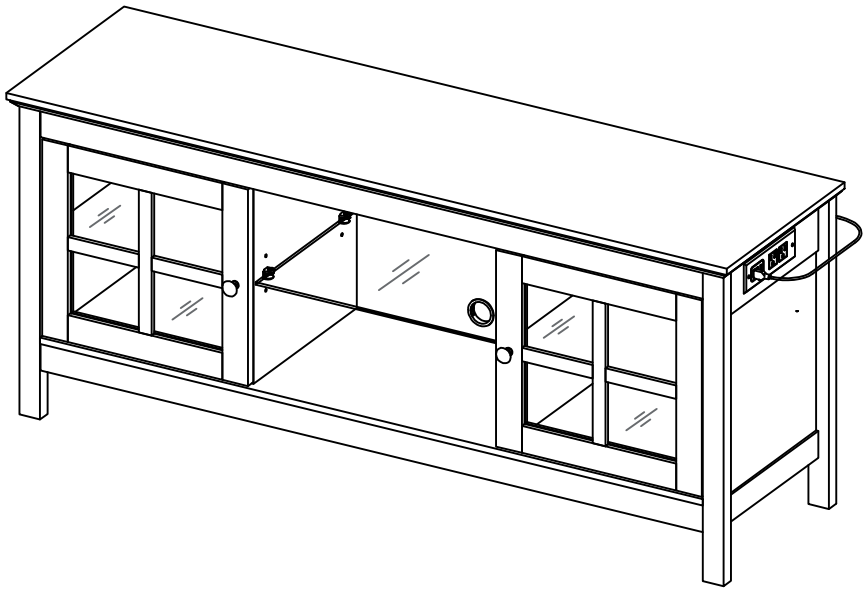

Option B

homespteam@hotmail.com

Assembly Manual

homespteam@hotmail.com

Thanks for your purchasing, if you are satisfied with our product, we sincerely invite you to share a shopping experience for our product. Your kindly advice will put us forward.

If any parts you received damaged or defective, please just contact us. We are happy to send replacement parts to ensure you have a fully functional product.



Please read carefully the assembly instructions before the installation.



Do not discard this manual or any of the packaging material until the unit has been completely assembled.



Might require two people

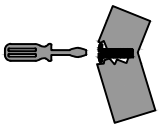

Do not overtighten or force the screws as they might damage the board.

Using Camlocks

Read each step carefully before starting. Each step of instruction should be performed in the correct order. If these steps are not followed in sequence, assembly difficulties may occur.

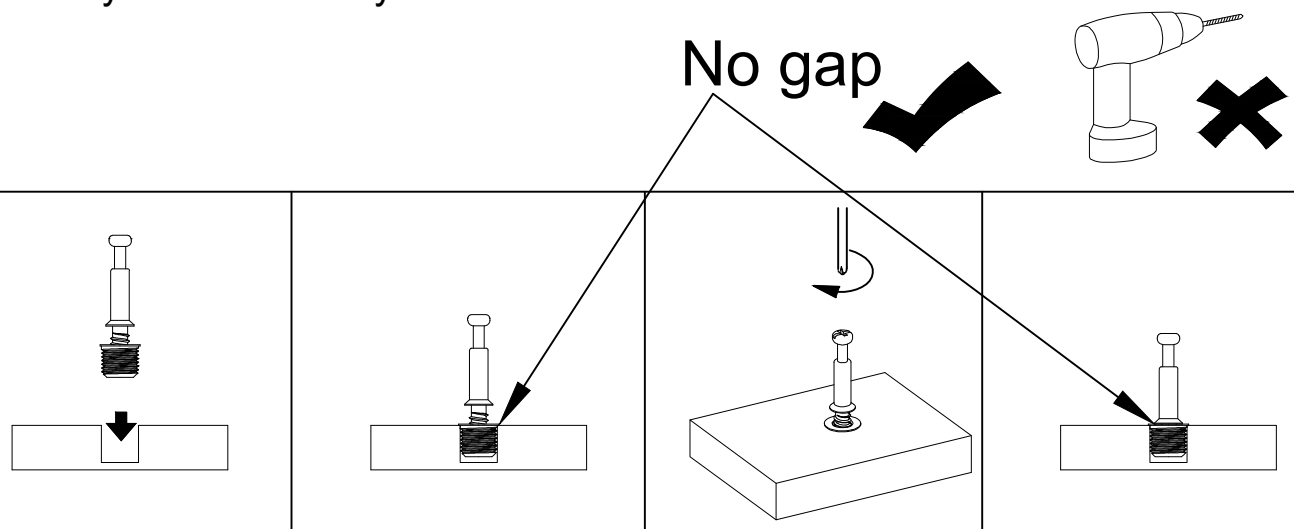

Connect the male camlock with plastic nut as directed in the assembly instructions using a screwdriver. Press the plastic nut completely into the hole first.

1 DO NOT OVER TIGHTEN

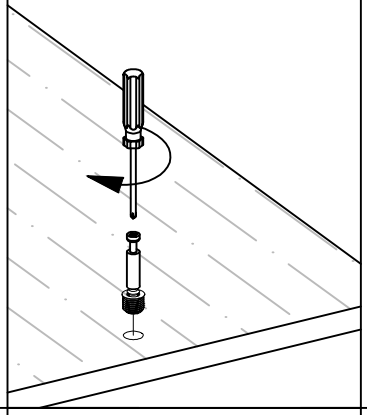

Push the male camlock into the entry hole.

2

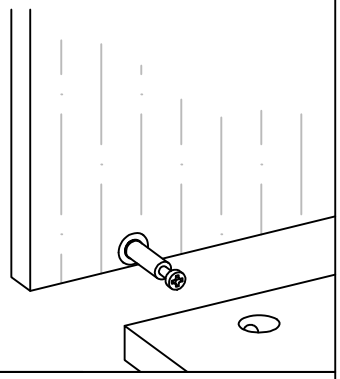

Insert the female camlock as shown in the instruction.

Note: ensure that the arrow on the top of the camlock points toward the entry hole for the male camlock.

3

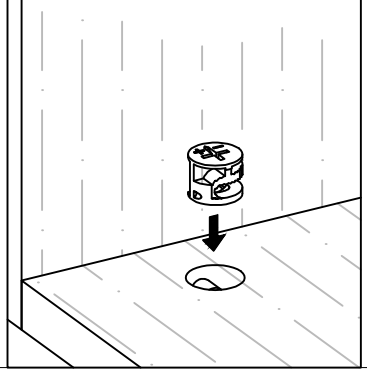

Turn the female camlock clockwise with a screwdriver.

You should feel a click when the camlock is locked in place.

The joint is now secure.

4

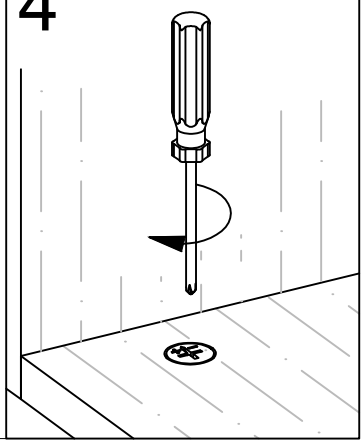

HOW TO ADJUST THE EUROPEAN ADJUSTABLE HINGES ON DOOR

If the doors require adjustment, follow the below options as needed:
To adjust door up or down, loosen screws (a), adjust door and retighten screws.
To adjust door left and right, turn screw (b) in or out.
To adjust door in and out, loosen screw (c), adjust door and retighten screw.

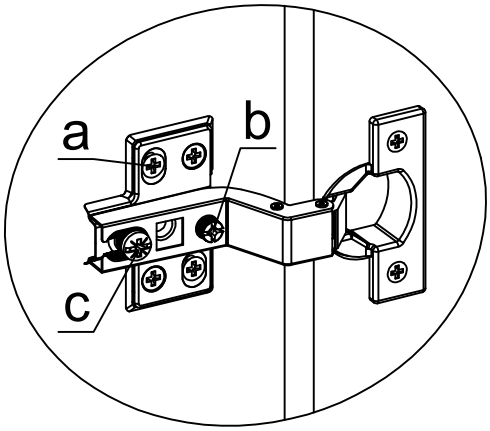

PART LIST

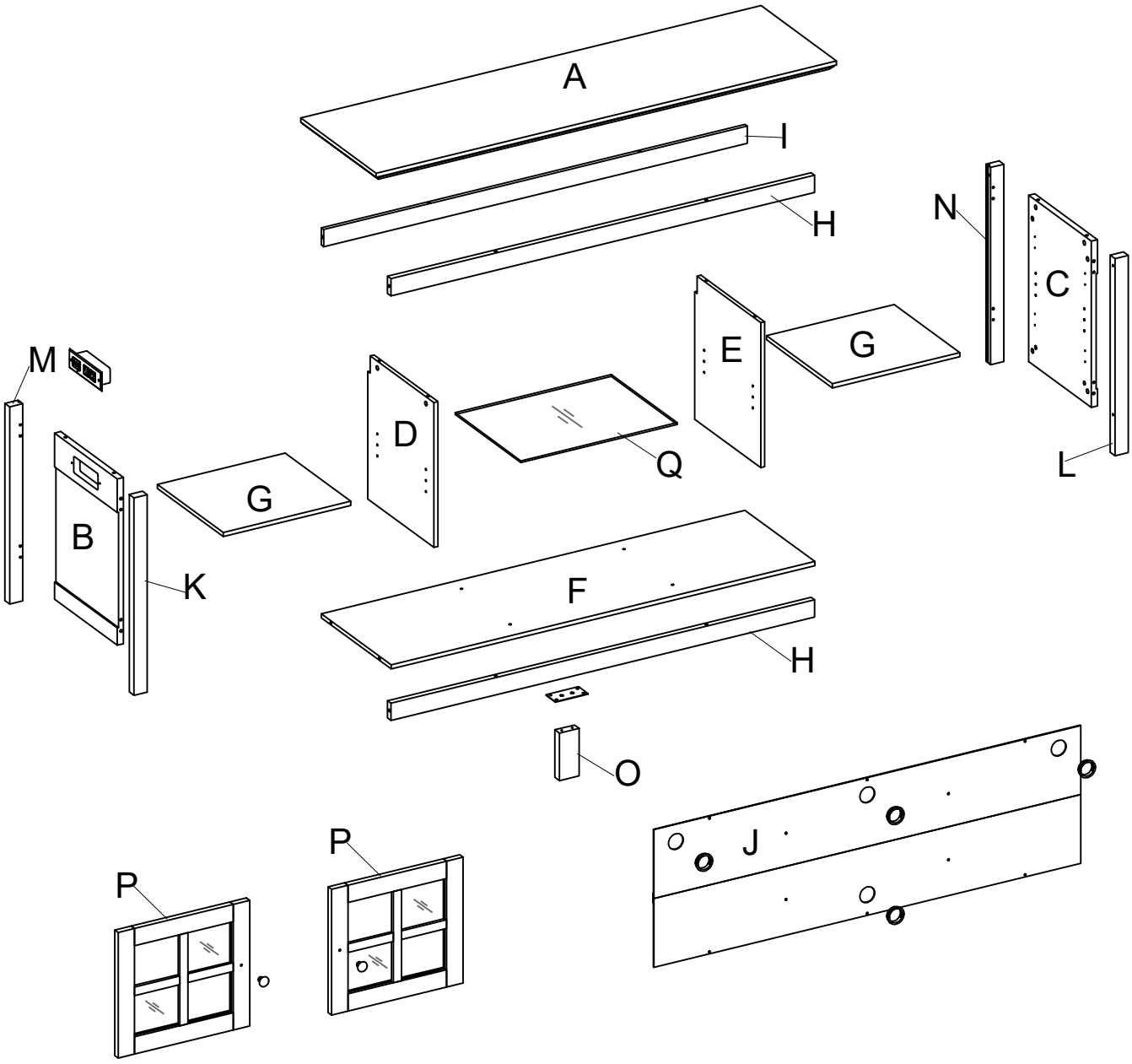

PART LIST			
A x 1pc 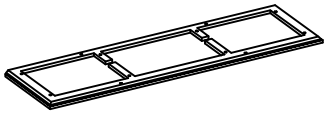	B x 1pc 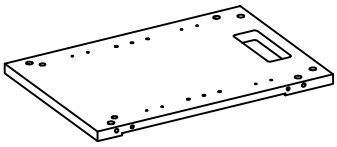	C x 1pc 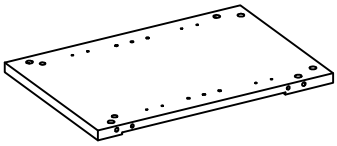	D x 1pc 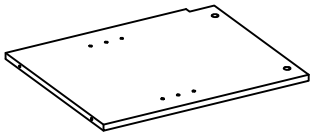
E x 1pc 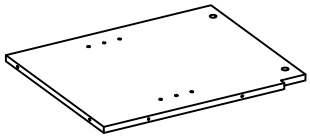	F x 1pc 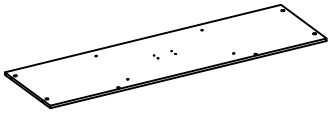	G x 2pcs 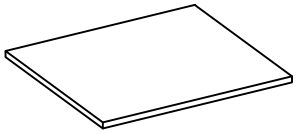	H x 2pcs 
I x 1pc 	J x 1pc 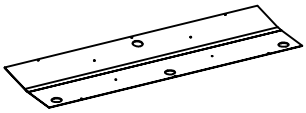	K x 1pc 	L x 1pc 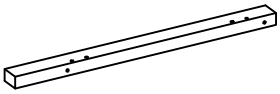
M x 1pc 	N x 1pc 	O x 1pc 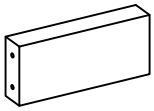	P x 2pcs 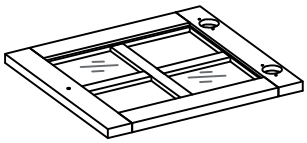
Q x 1pc 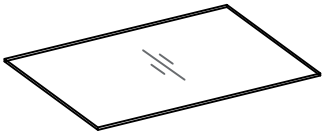 475x346*5			

HARDWARE LIST

1 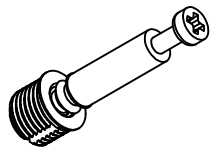 M6x28 18 pcs	2 coarse thread screw 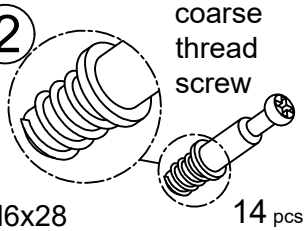 M6x28 14 pcs	3  Ø12 32 pcs	4  M5x40 6 pcs
5  M6x30 8 pcs	6  M3x12 28 pcs	7 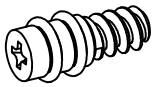 M6x19 8 pcs	8 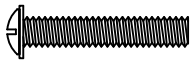 M4x22 2 pcs
9 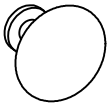 2 pcs	10 Large curved hinge 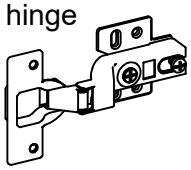 Ø35 4 pcs	11  M3x16 24 pcs	12 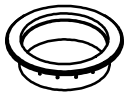 Ø45mm 4 pcs
13 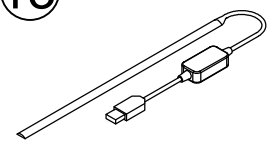 125cm 1 pc	14  3 pcs	15 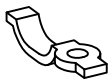 8 pcs	16 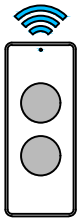 RF Remote Control 1 pc
17  1 pc	18 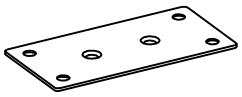 100x50x1.5 1 pc	19 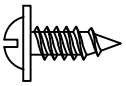 M4x12 10 pcs	20  4 pcs
21 M4x12 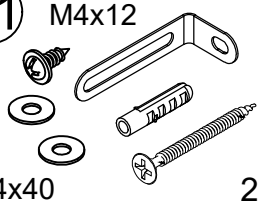 M4x40 2 pcs	22 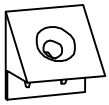 8 pcs	23  M3 1 pc	24 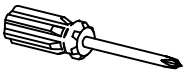 1 pc

STEP 1

2 x14

Please ensure that using the correct screws for panel assembly.Using the wrong screw will cause a cracked panel.

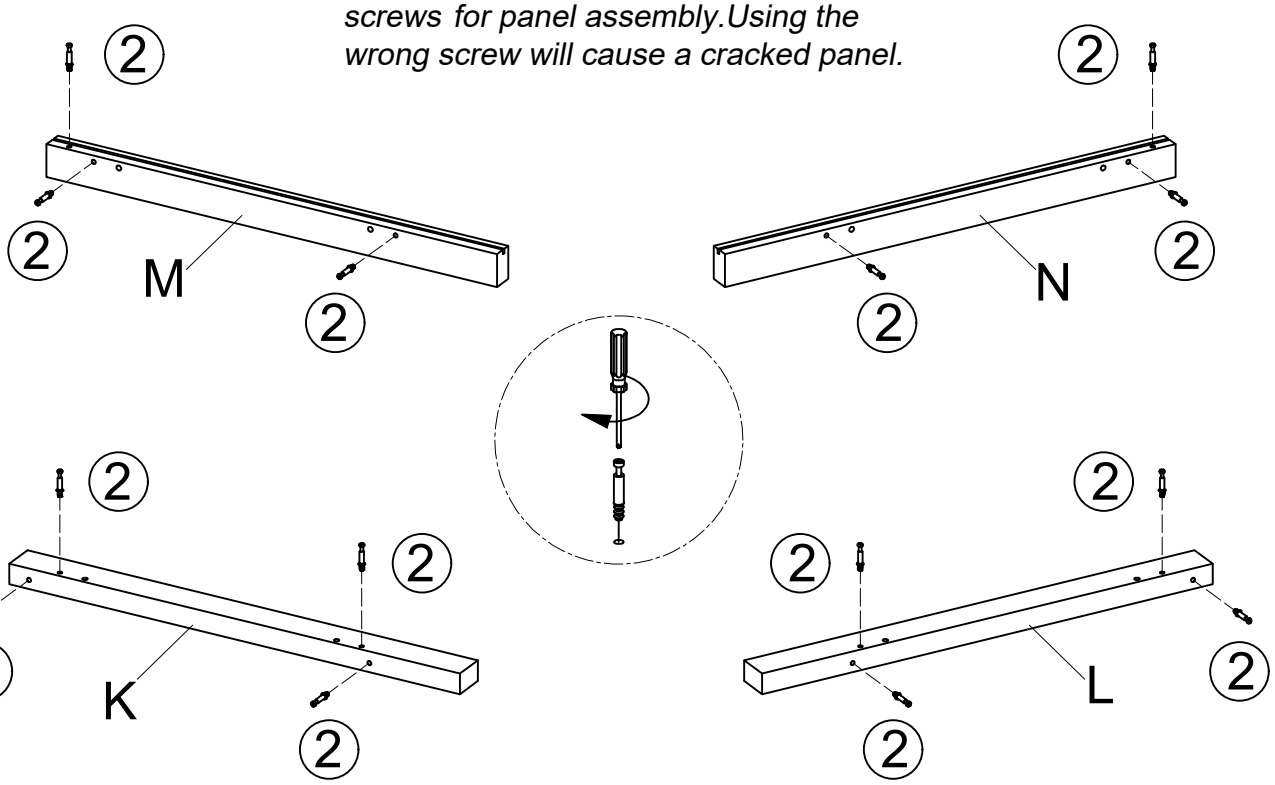

STEP 2

1 x18

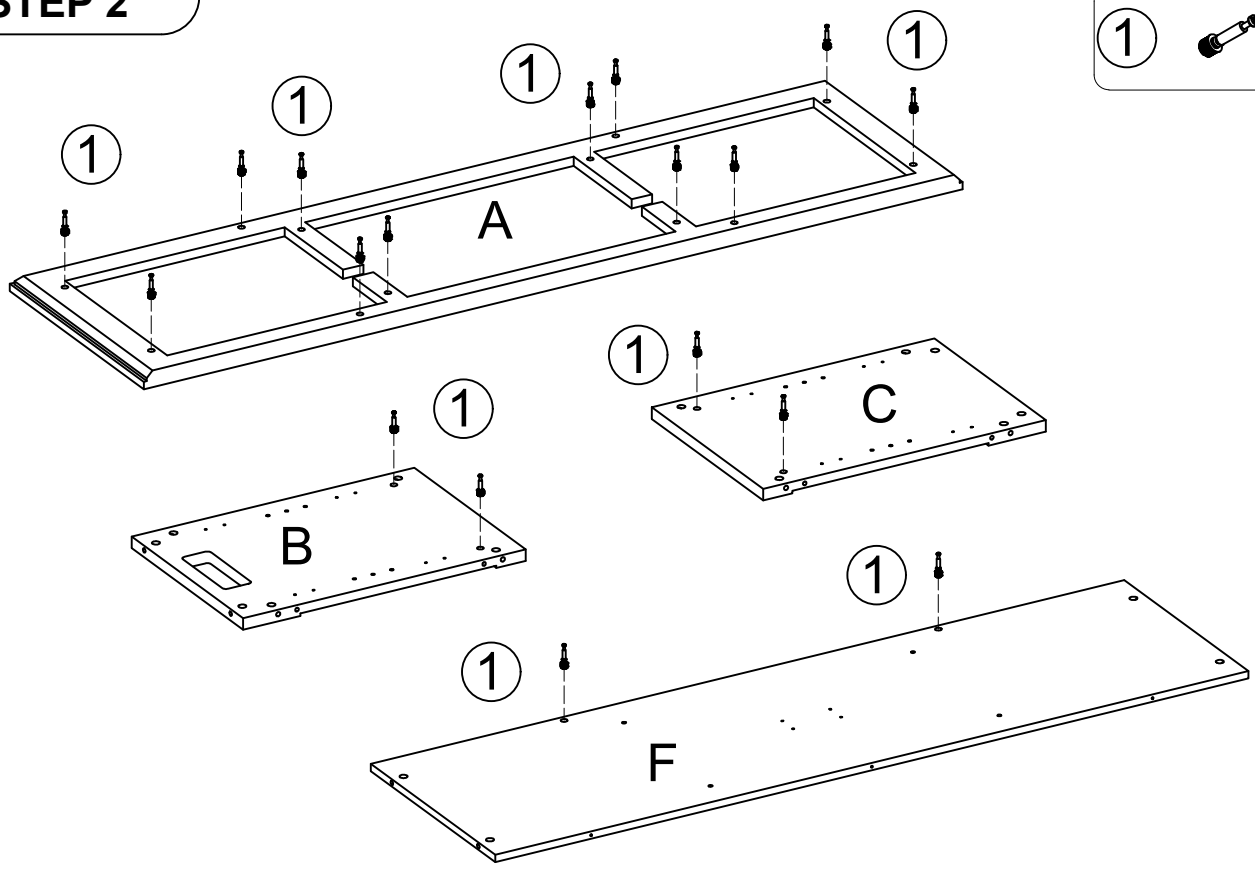

STEP 3

3 x2

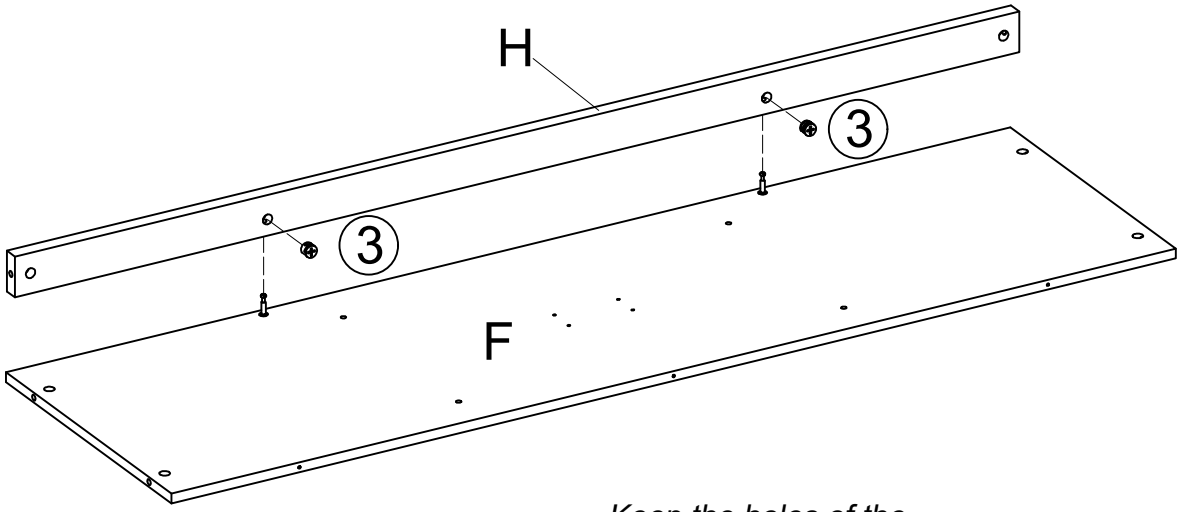

Keep the holes of the
Part H toward this direction as shown

STEP 4

4 x2

18 x1

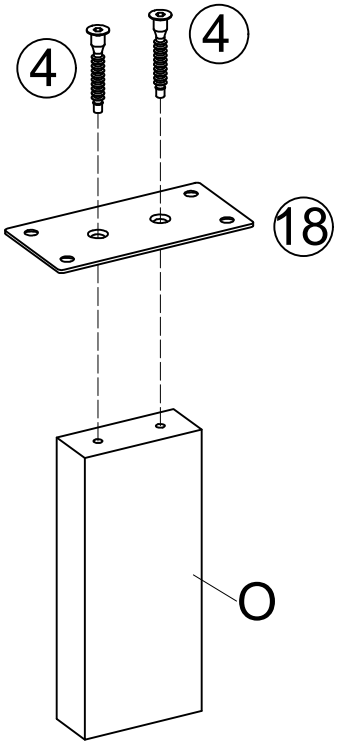

STEP 5

6 x4

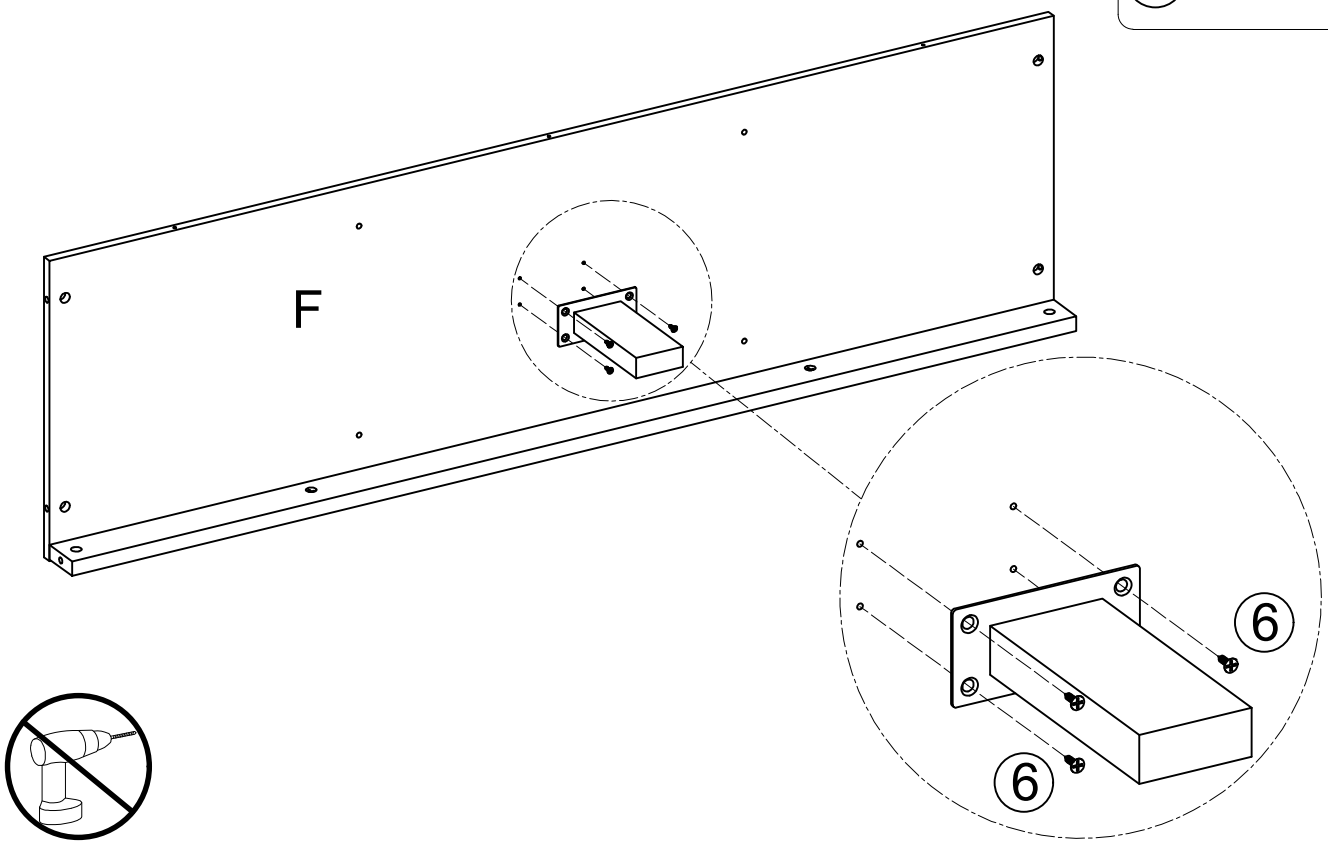

STEP 6

Keep the holes of the Part D and Part E toward this direction as shown

4 x4

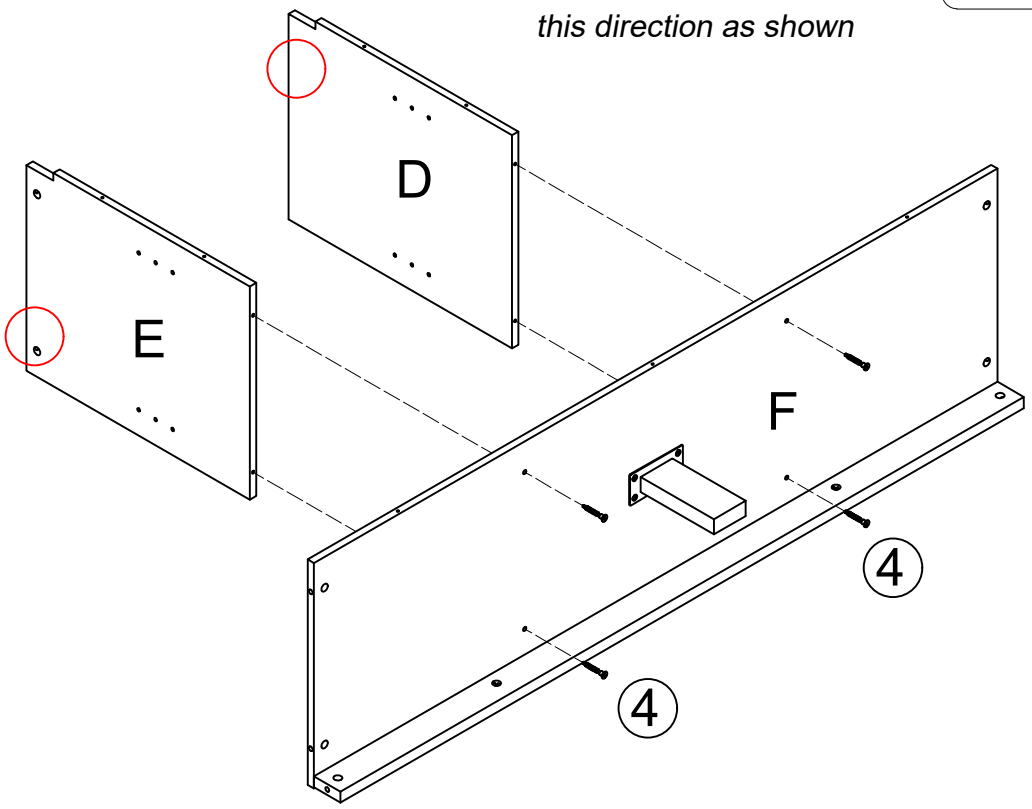

Option A

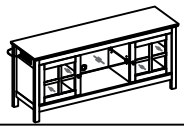

STEP 7

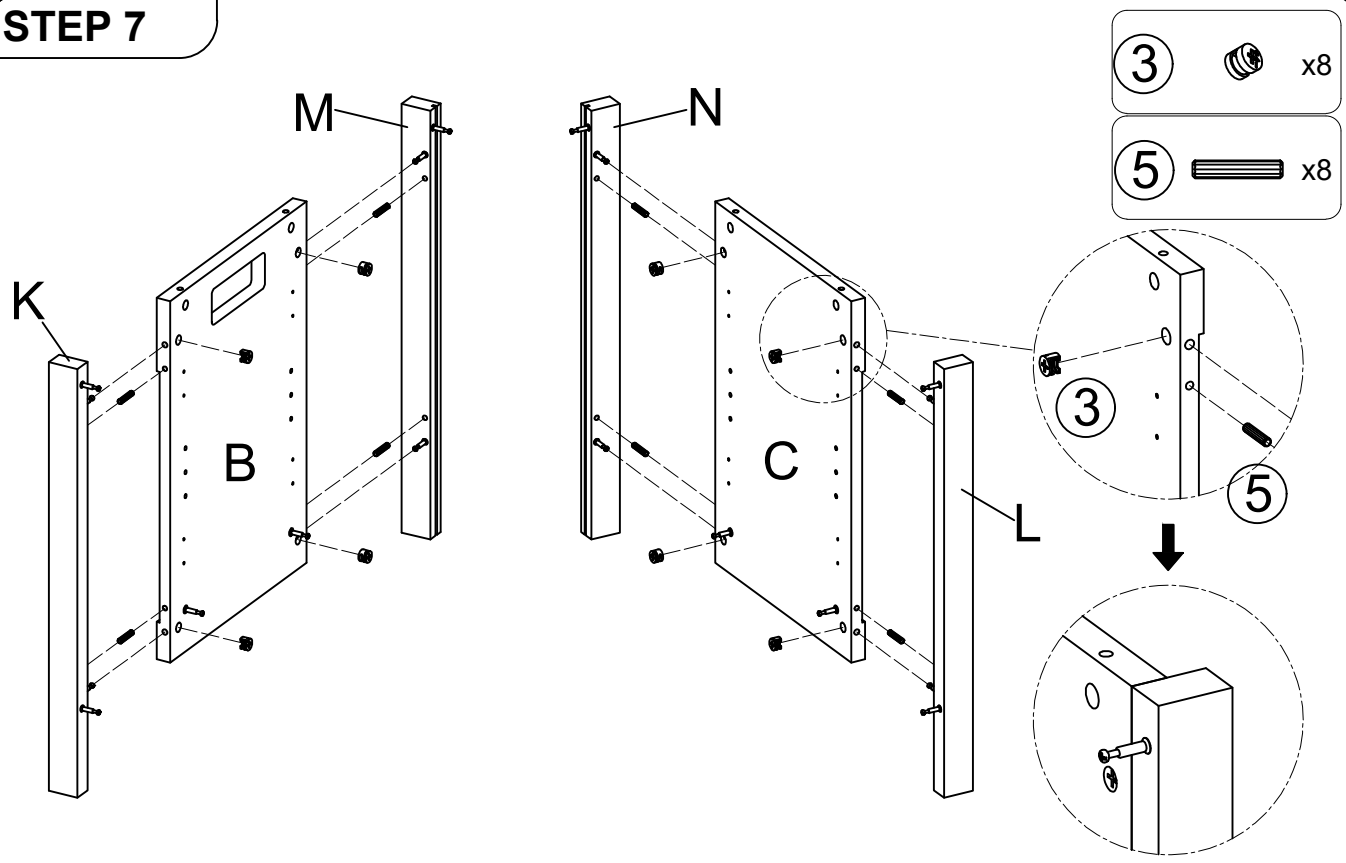

STEP 8

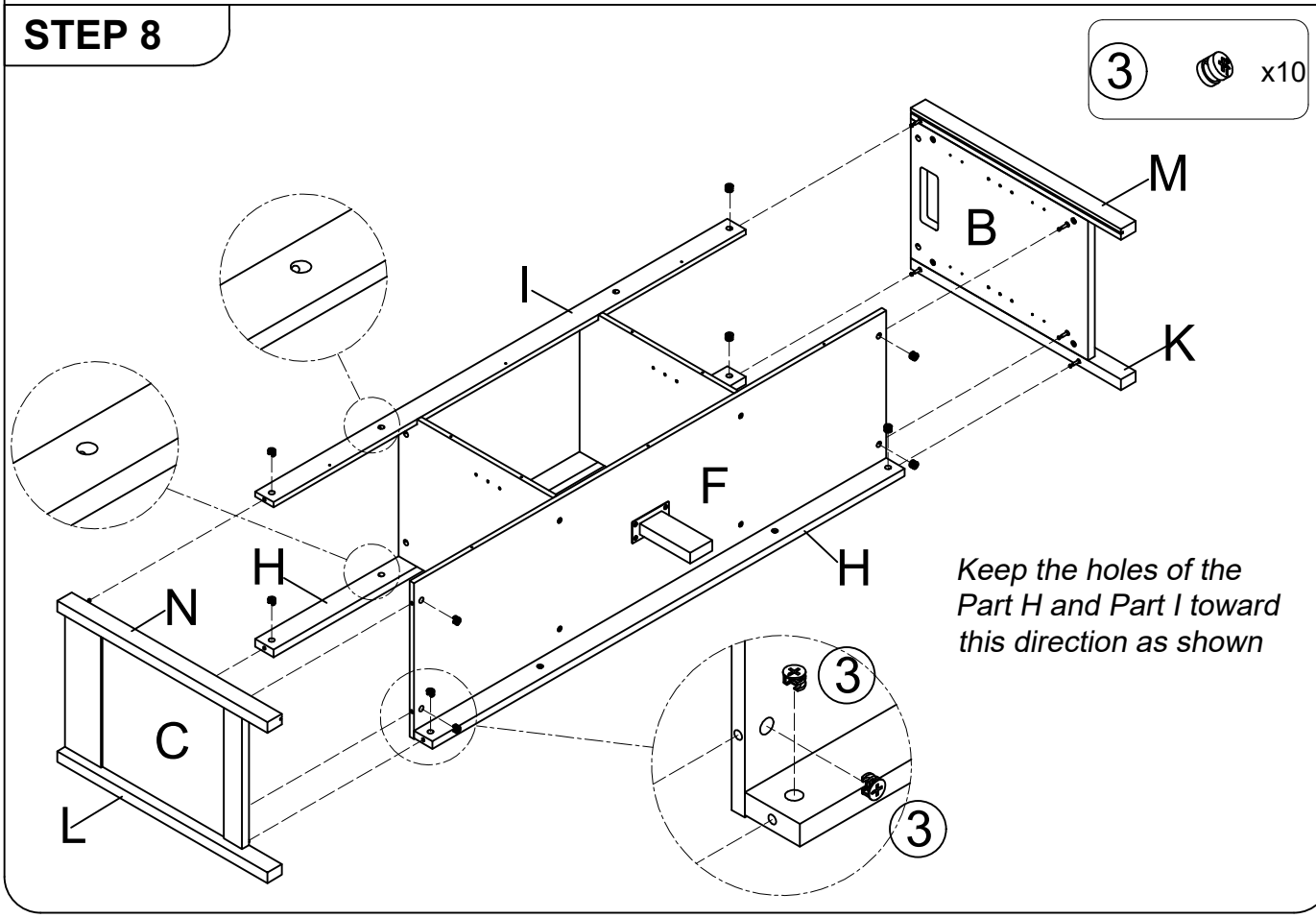

Keep the holes of the Part H and Part I toward this direction as shown

STEP 9

Tear off the tape of the LED strip, stick the LED strip to the bottom of top panel (A). Fix the LED strip with plastic clips. Note: Do not cover the lamp beads.

6		x14
13		x1
14		x3
15		x8

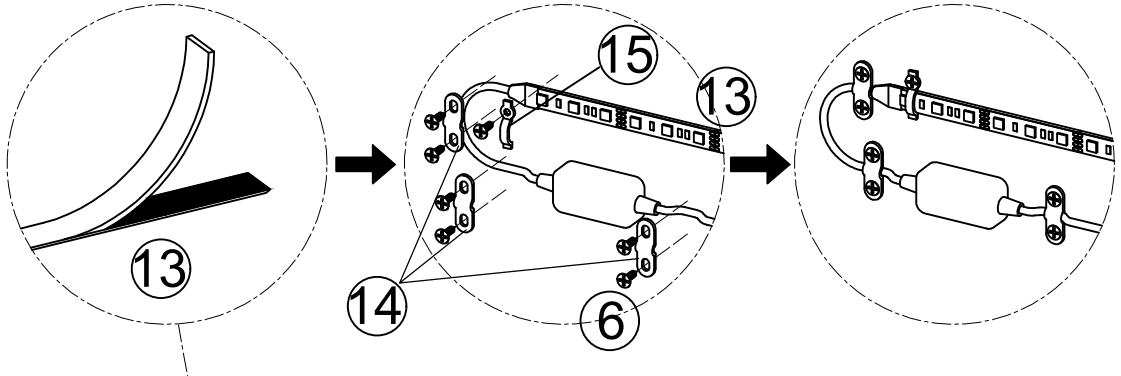

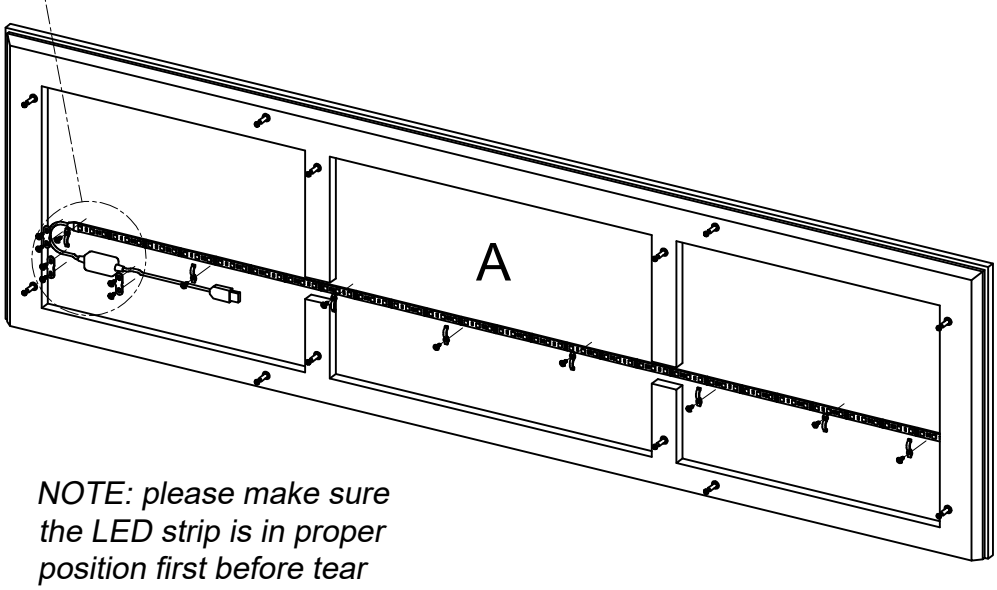

NOTE: please make sure the LED strip is in proper position first before tear off the tape.

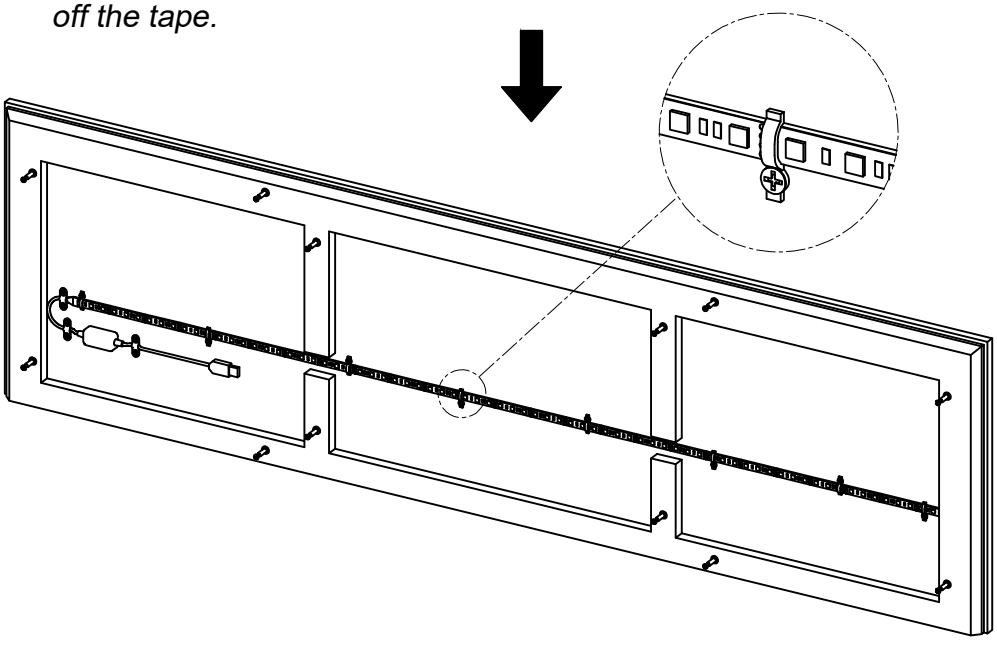

STEP 10

19 x10

Expand the Back Panel Part J, then attach the Back Panel in place.

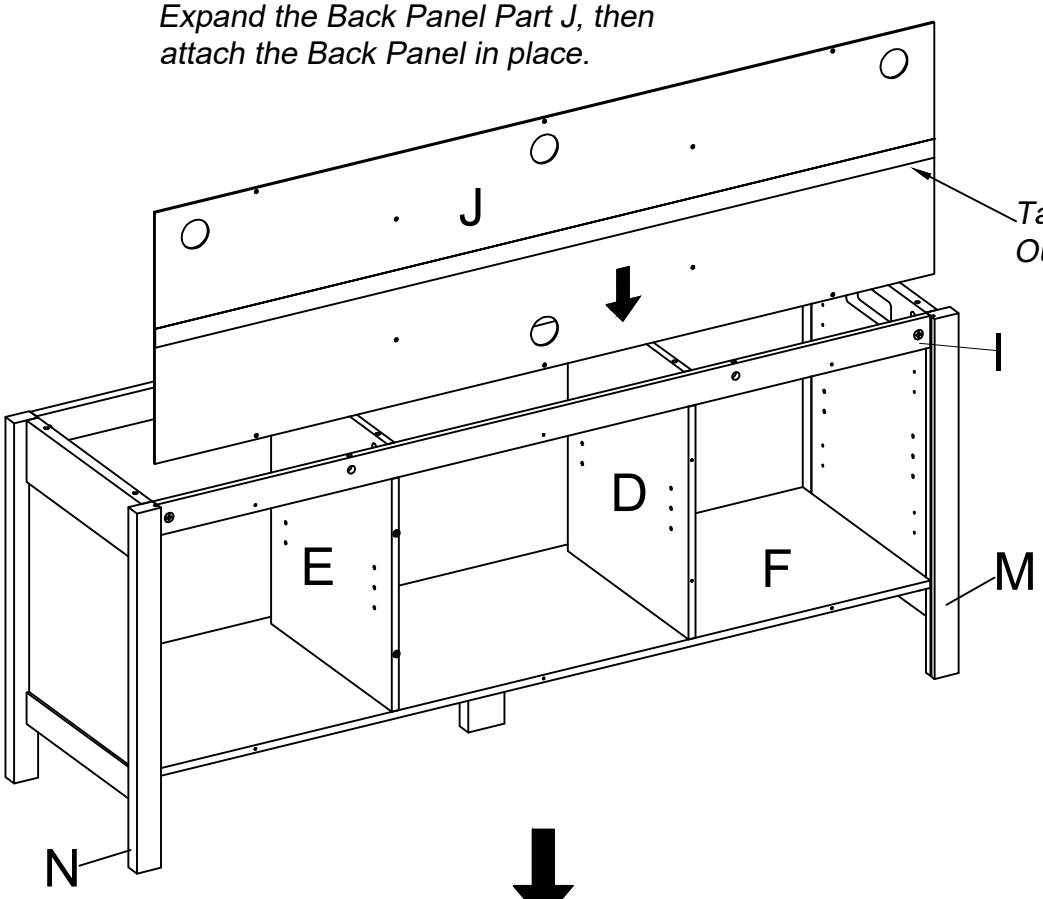

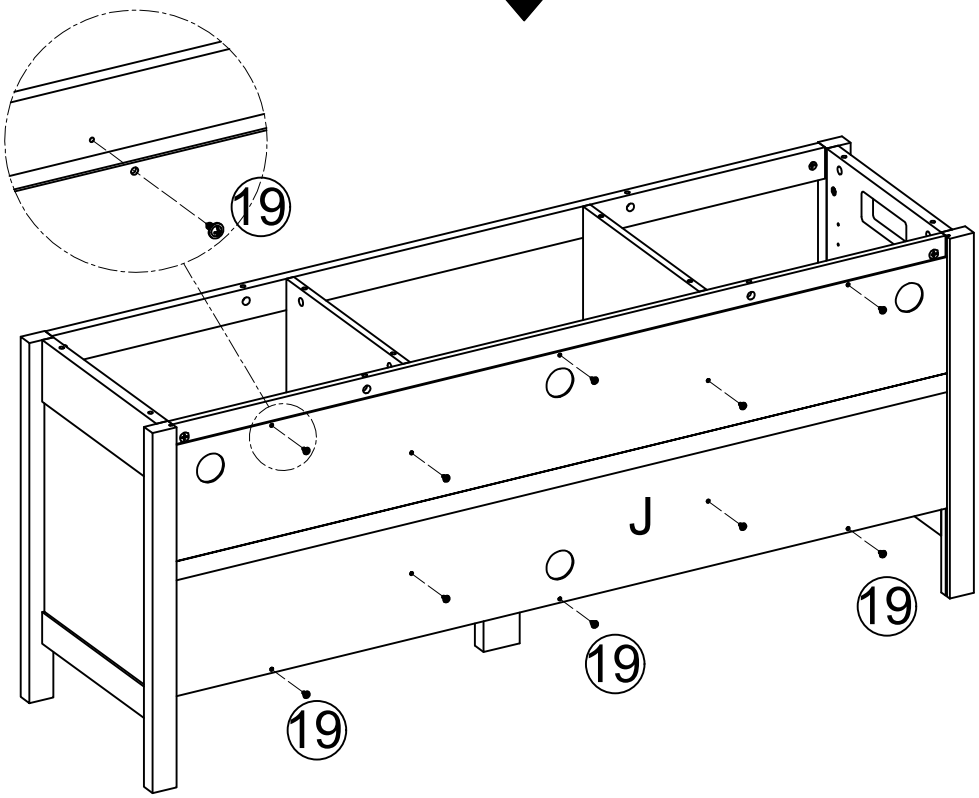

STEP 11

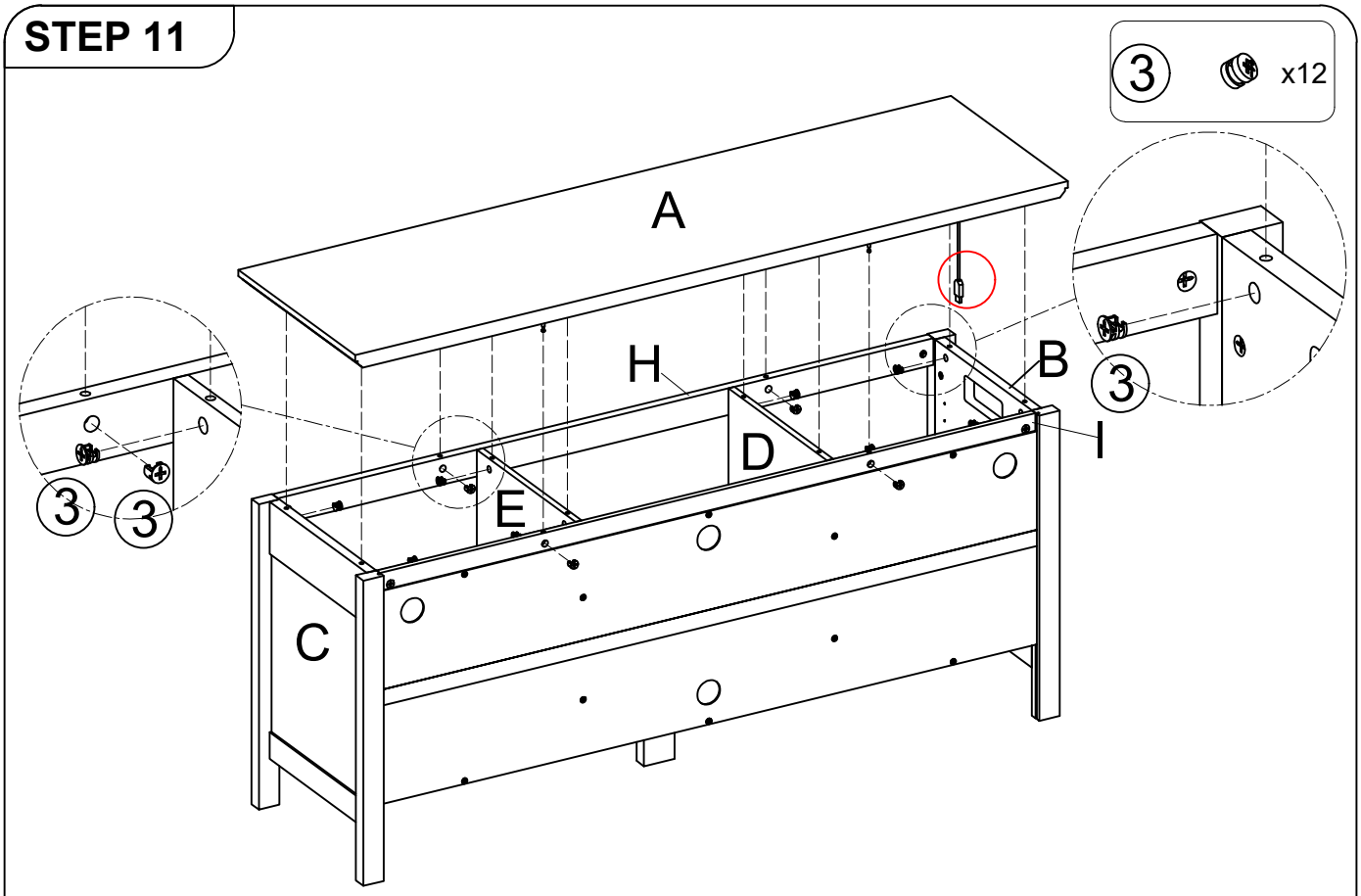

STEP 12

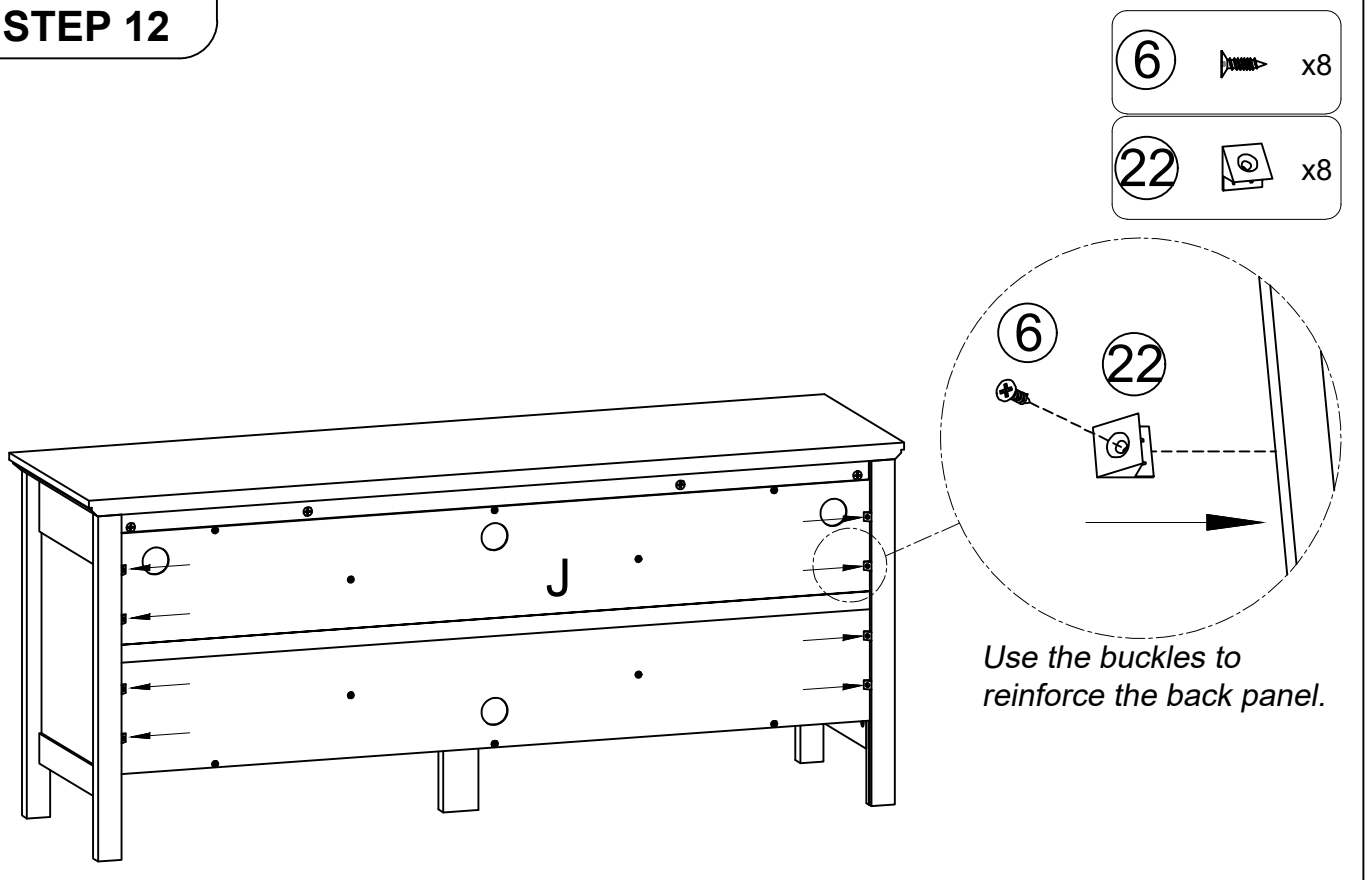

Use the buckles to reinforce the back panel.

STEP 13

12 x4

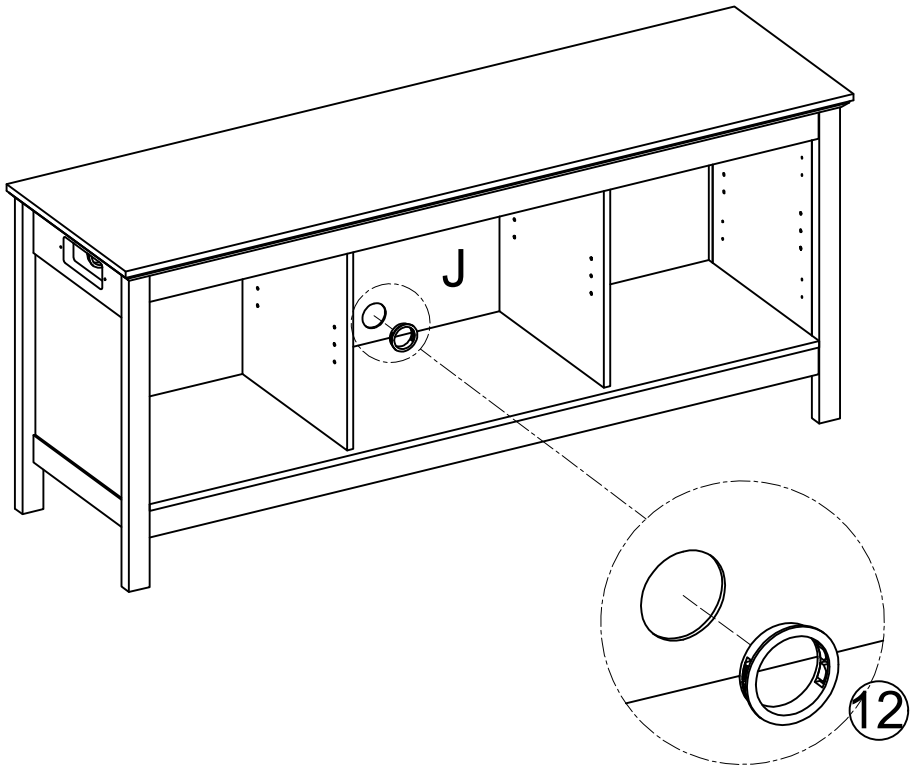

STEP 14

8 x2

9 x2

10 x4

11 x8

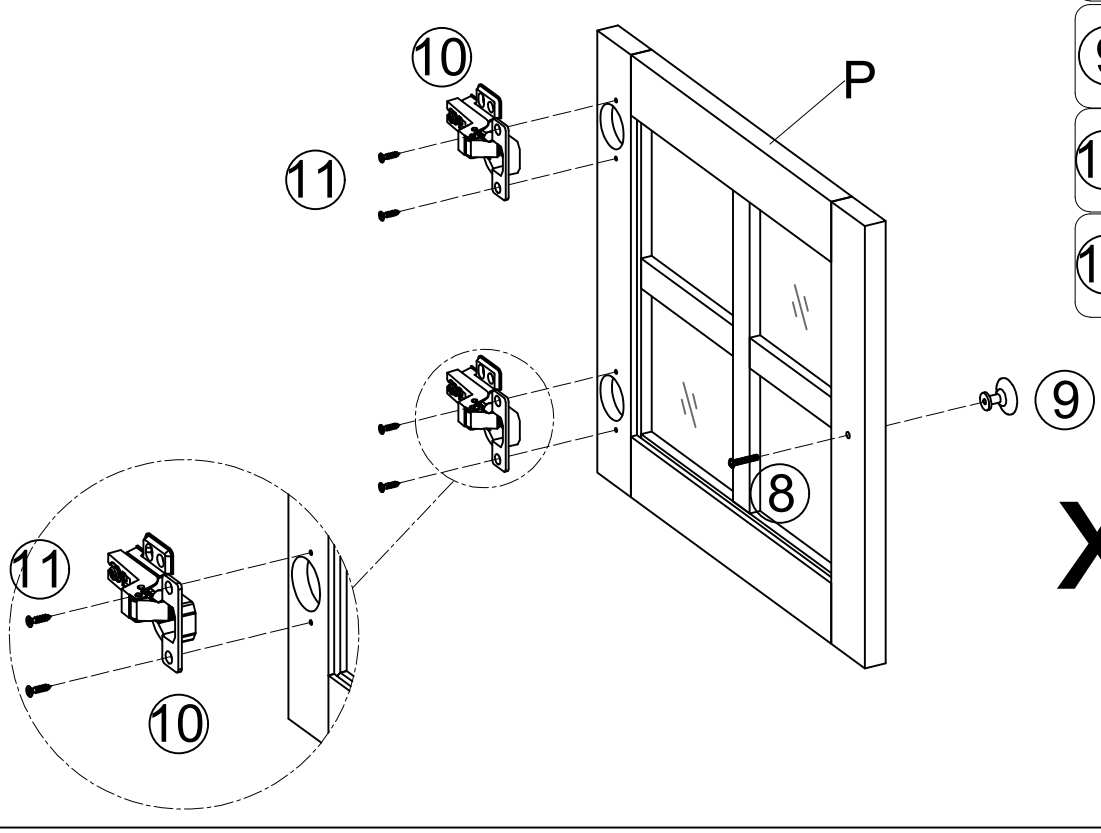

x2



STEP 15

11 x16

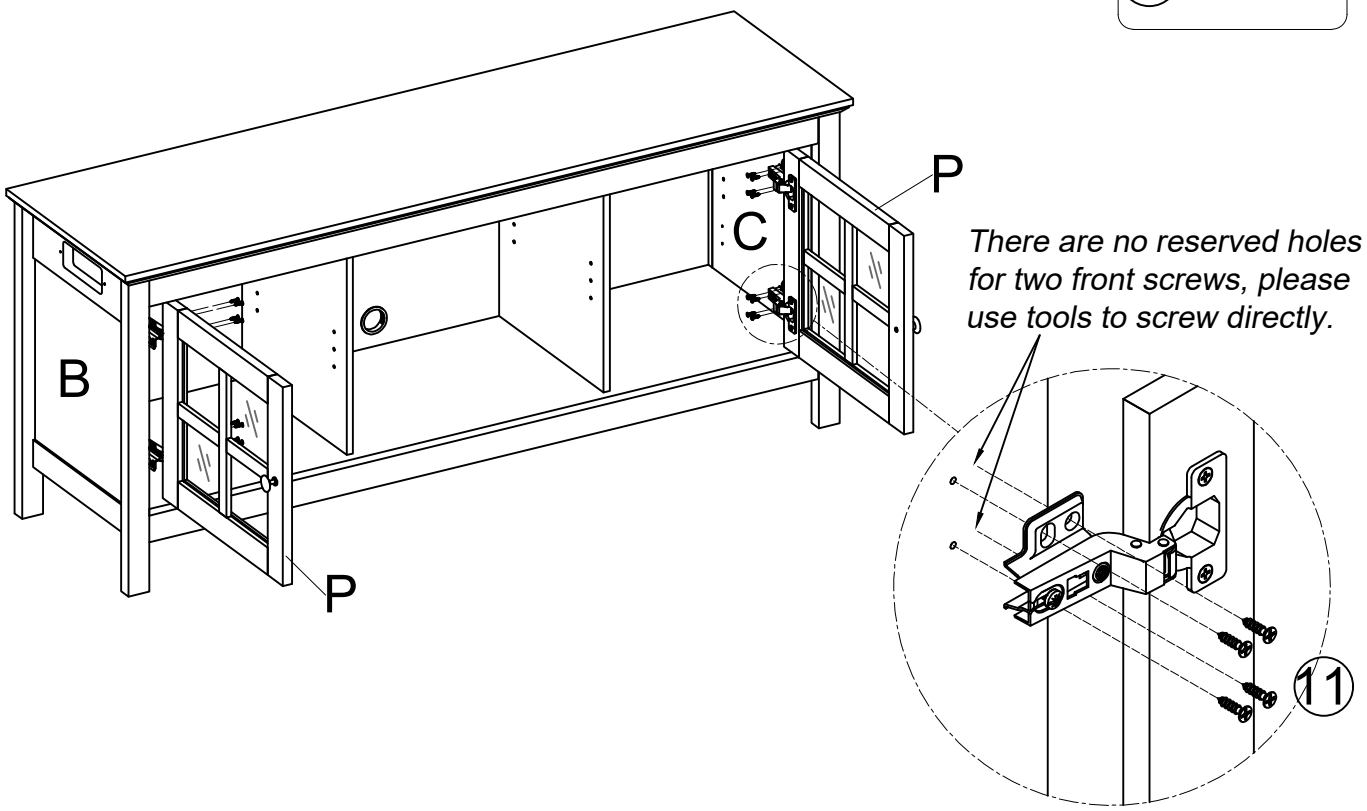

STEP 16

7 x8

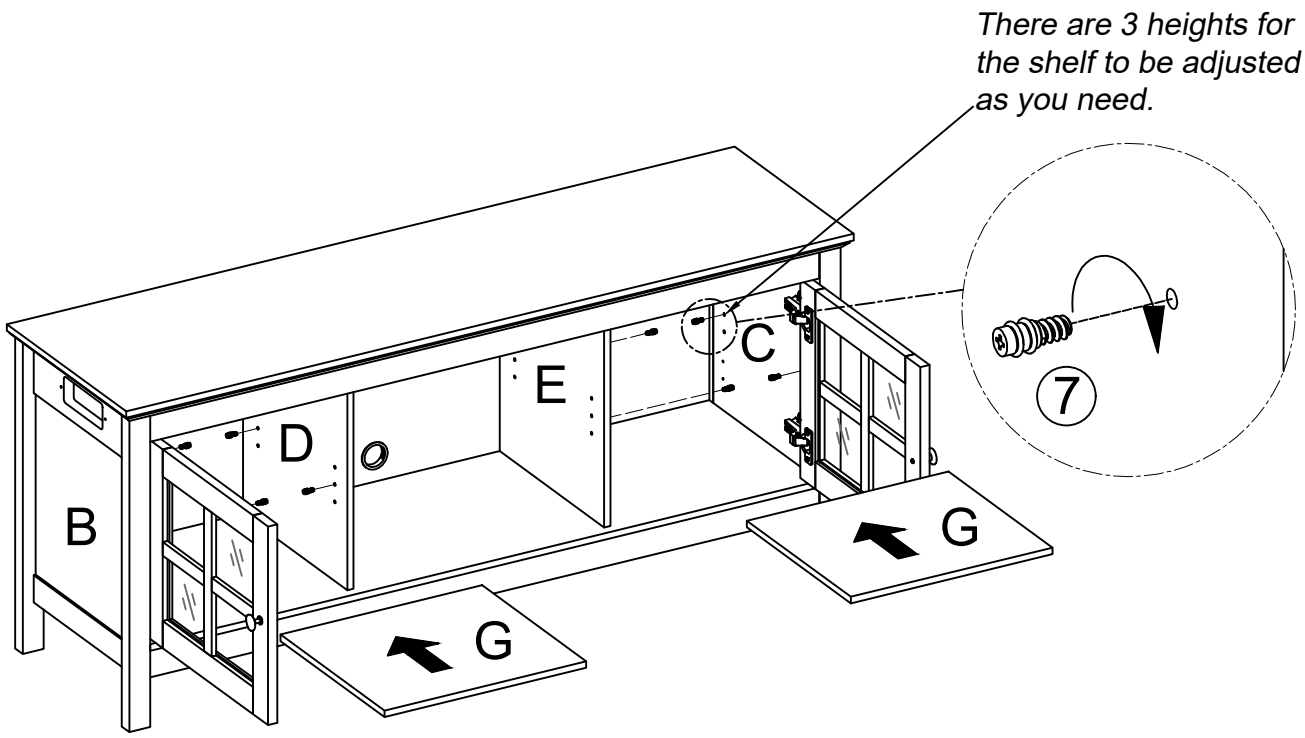

STEP 17

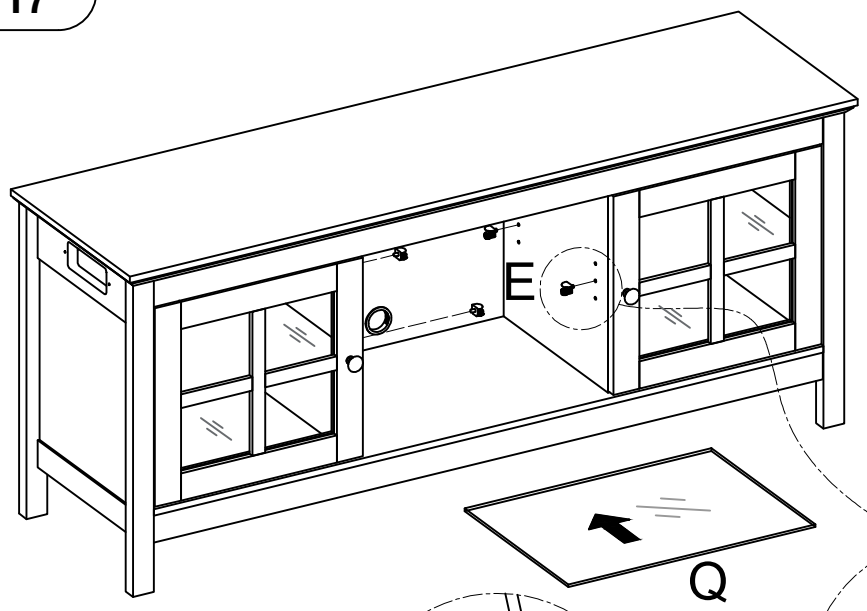

20 x4

There are 3 heights for the shelf to be adjusted as you need.

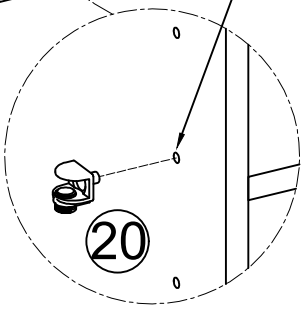

Screw the white plastic nut to lossen or tighten tempered glass shelf.

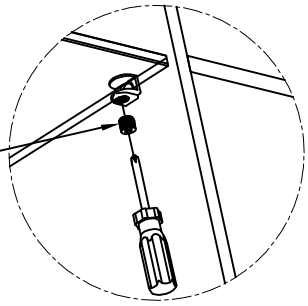

STEP 18

6 x2

17 x1

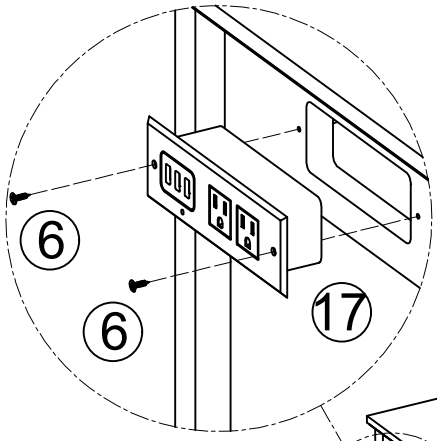

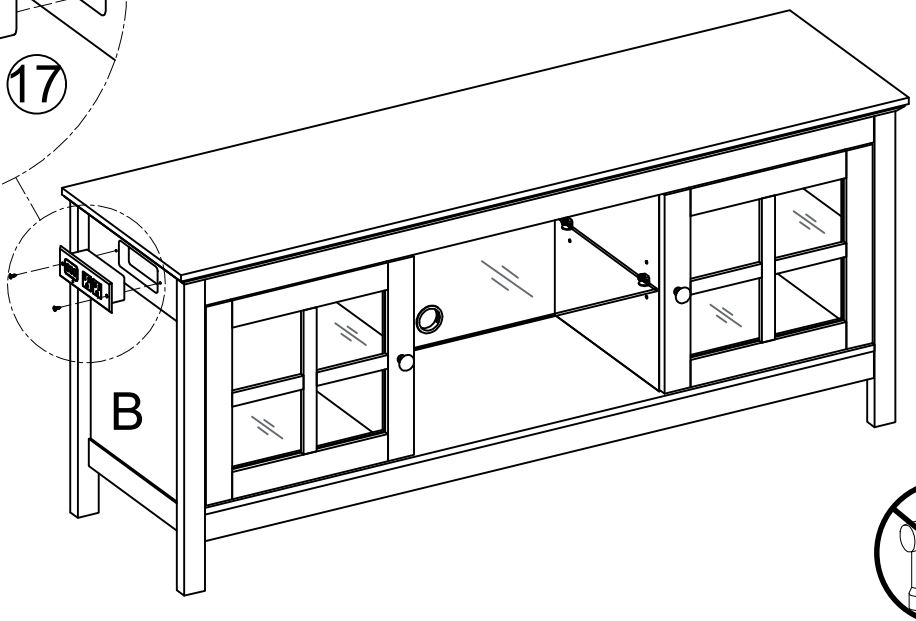



STEP 19

TIPPING RESTRAINT HARDWARE

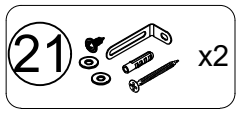

Note: We have included two Tipping Restraint Hardware set for this Unit. When properly installed, this restraint can provide protection against the unexpected tipping of the Unit due to small tremors, bumps or climbing. We strongly recommend mounting this hardware to a wall stud and your Unit.

Note: You must install the Tipping Restraint Hardware with the unit in use to prevent any accidents or damage to the unit.

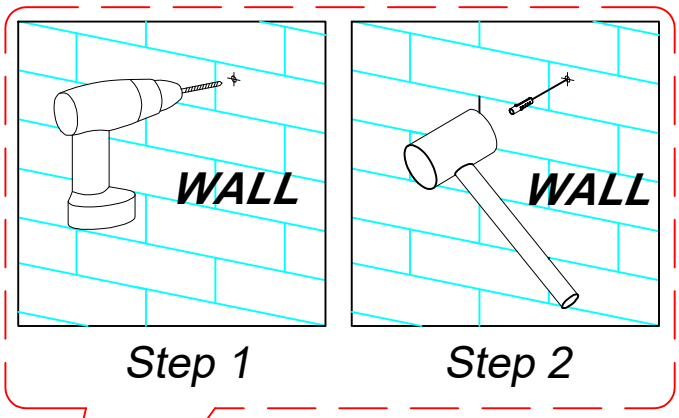

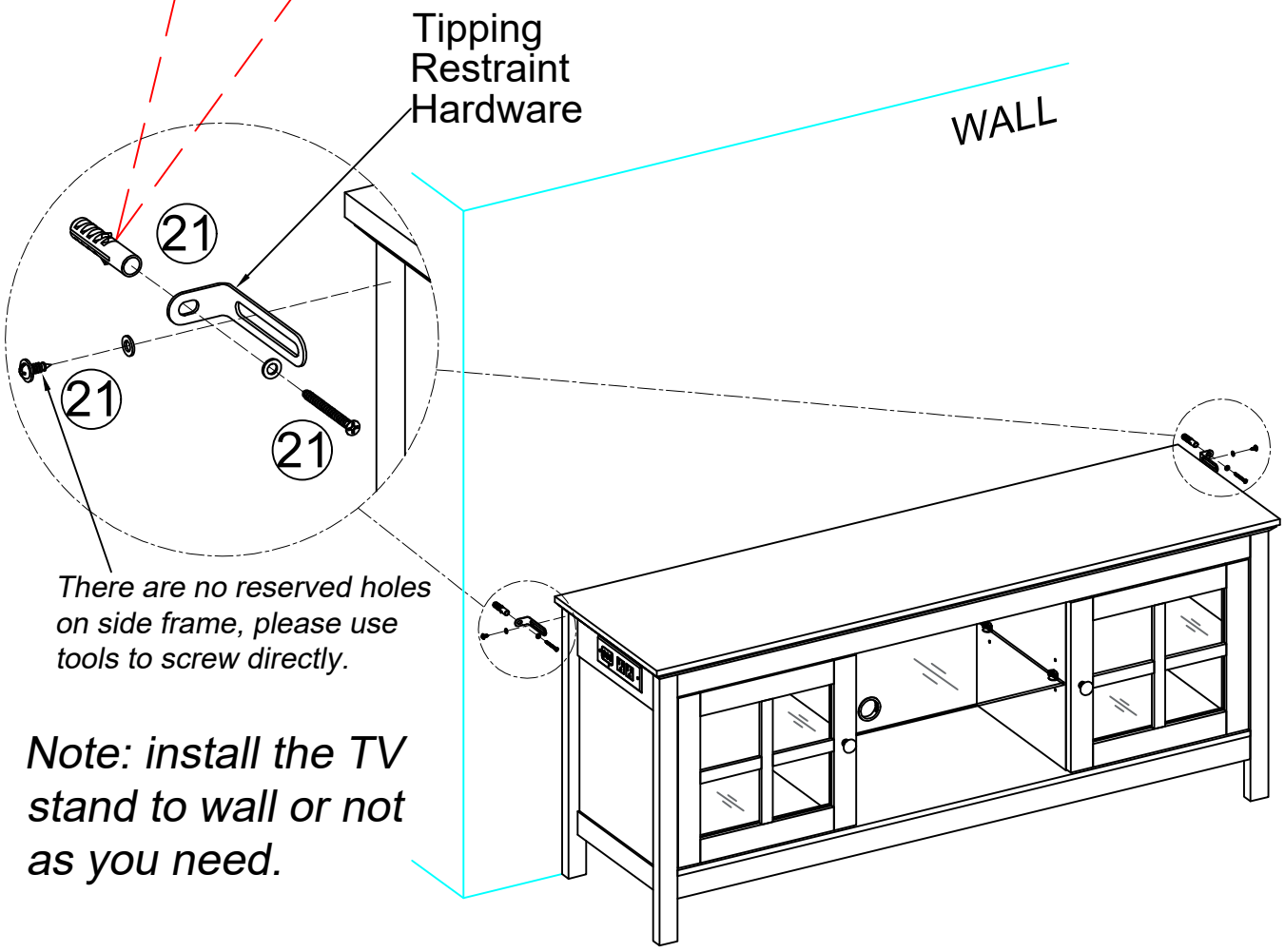

Note: install the TV stand to wall or not as you need.

Option B

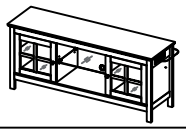

STEP 7

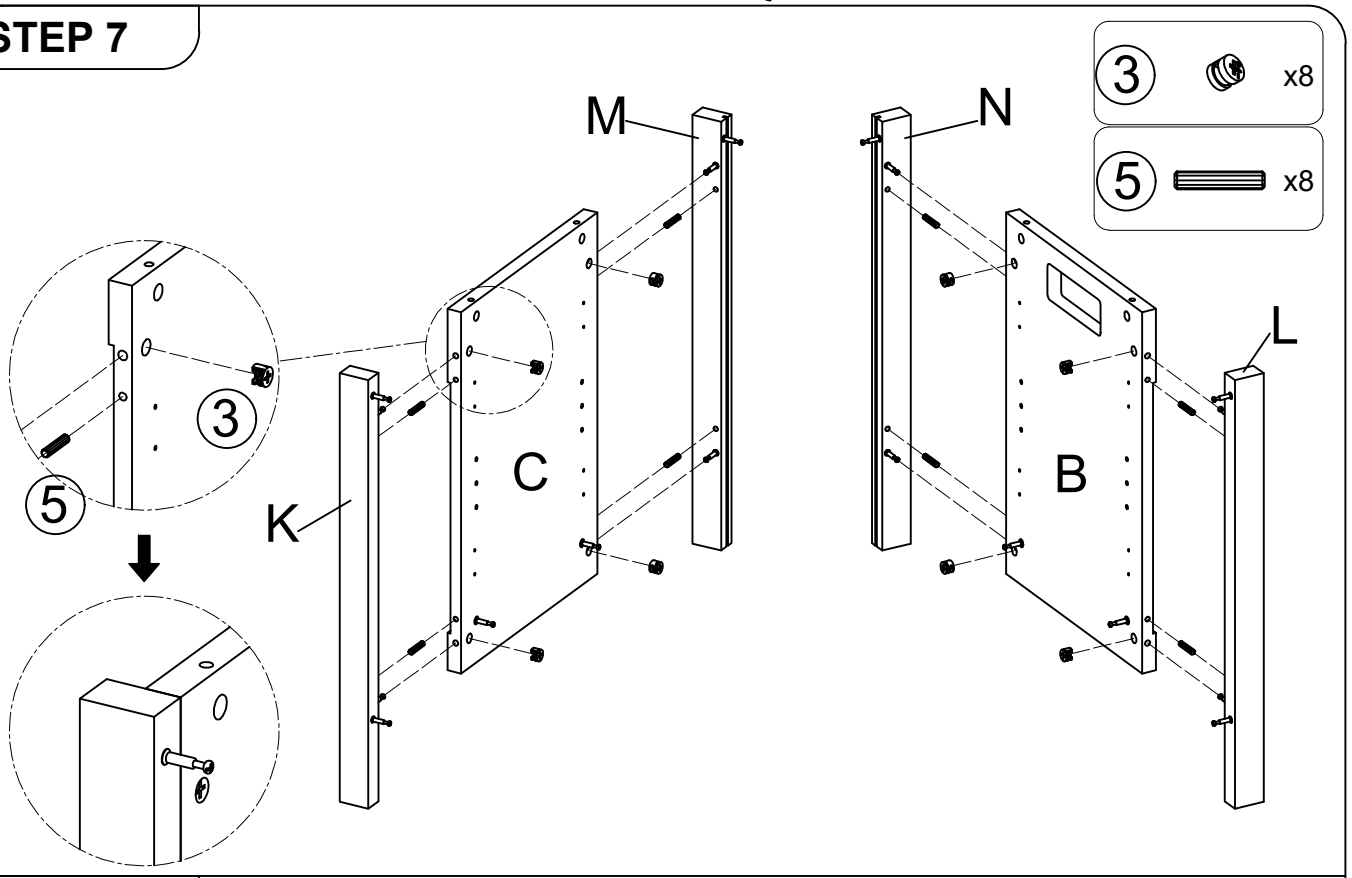

STEP 8

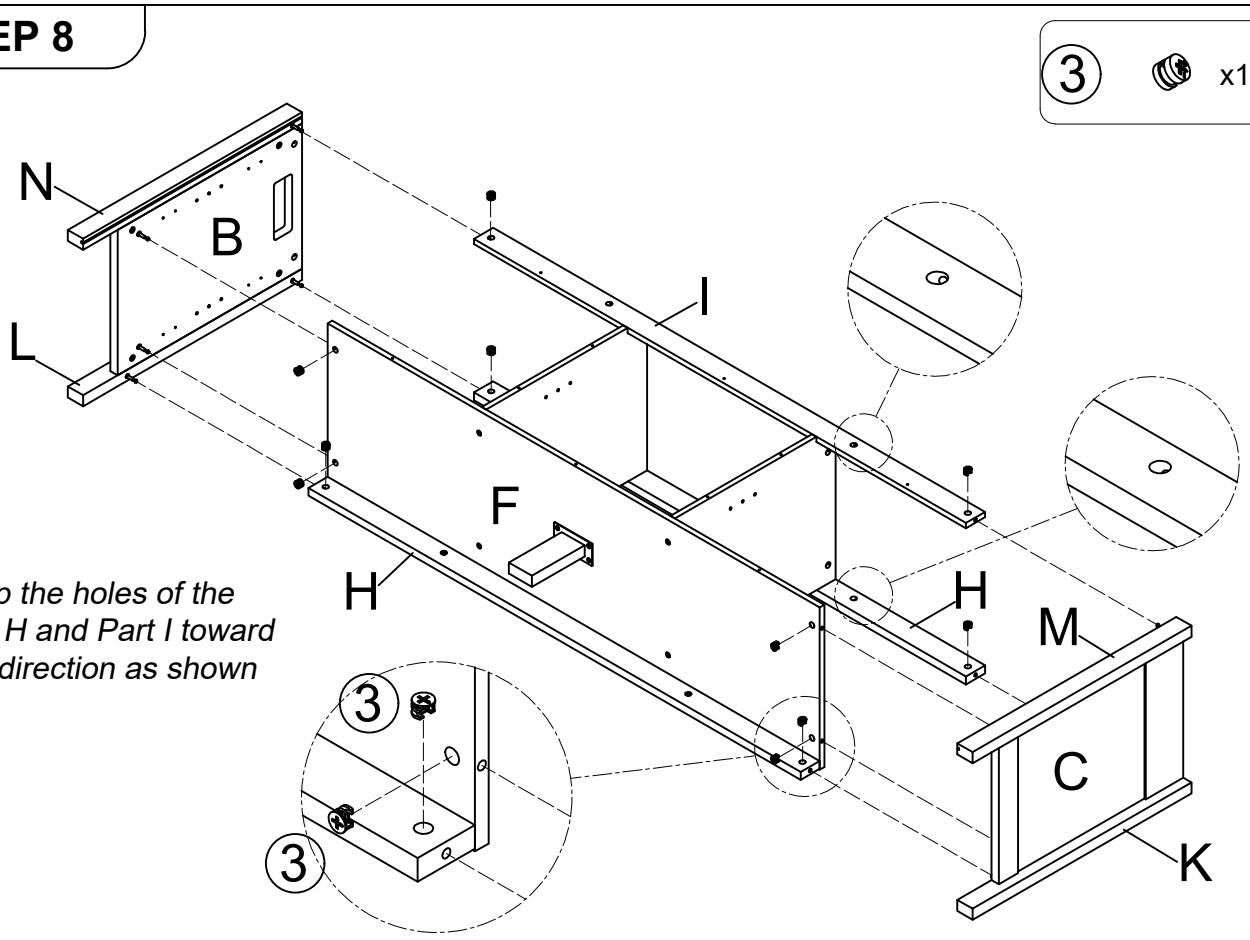

Keep the holes of the Part H and Part I toward this direction as shown

STEP 9

Tear off the tape of the LED strip, stick the LED strip to the bottom of top panel (A). Fix the LED strip with plastic clips. Note: Do not cover the lamp beads.

6		x14
13		x1
14		x3
15		x8

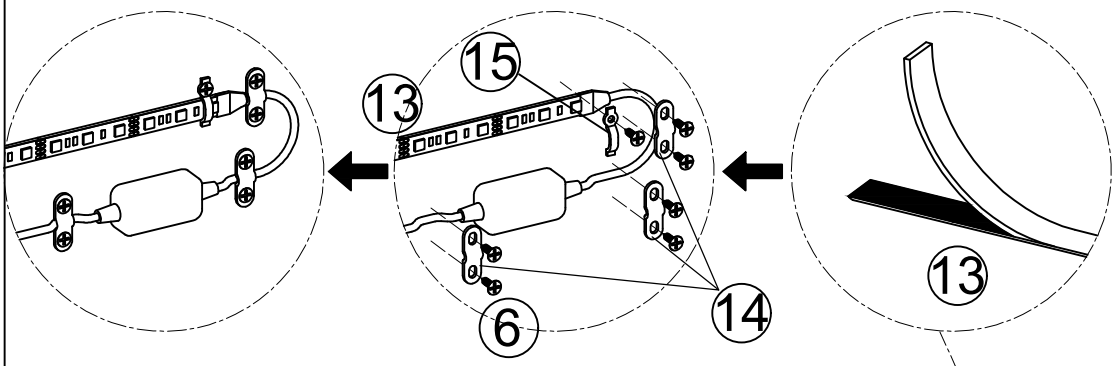

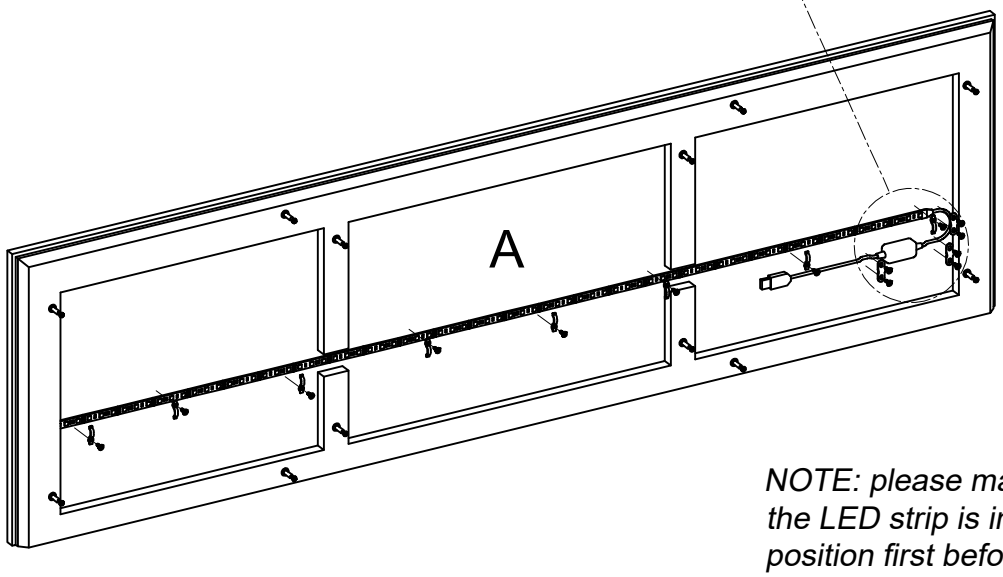

NOTE: please make sure the LED strip is in proper position first before tear off the tape.

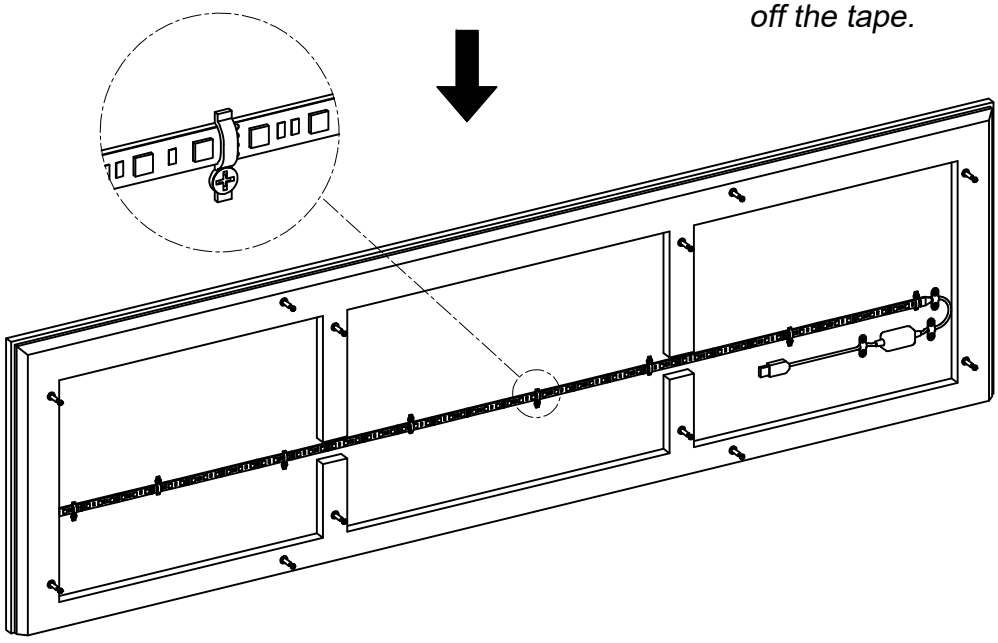

STEP 17

Repeat step 10 through 16 as same as Option A create a Cabinet Frame Assembly, then continue to assemble the Option B from step 17.

20 x4

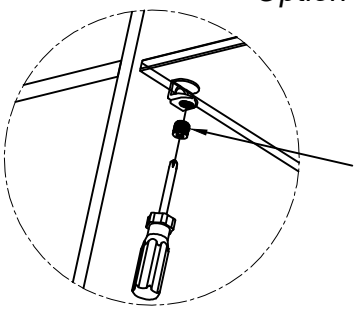

Screw the white plastic nut to lossen or tighten tempered glass shelf.

There are 3 heights for the shelf to be adjusted as you need.

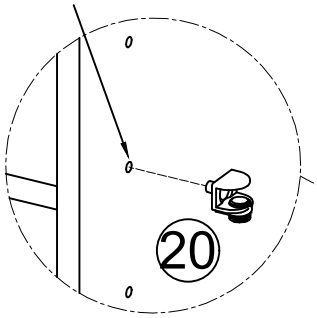

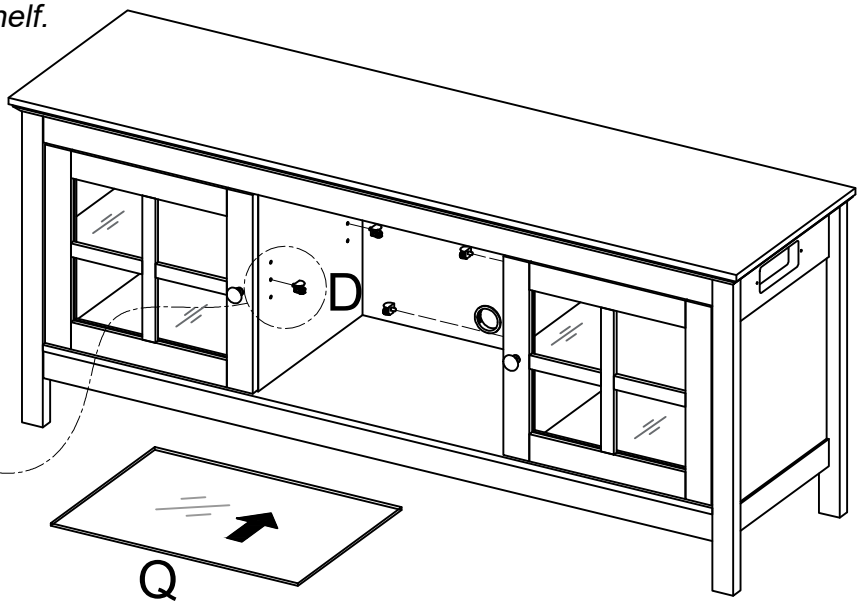

STEP 18

6 x2

17 x1

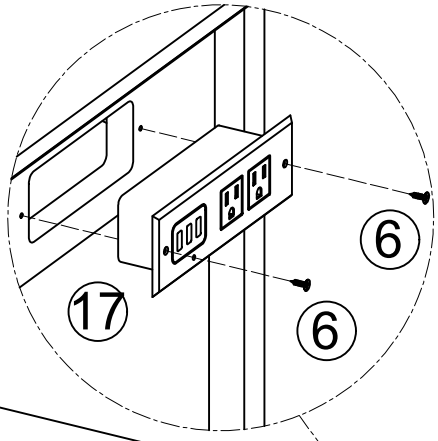

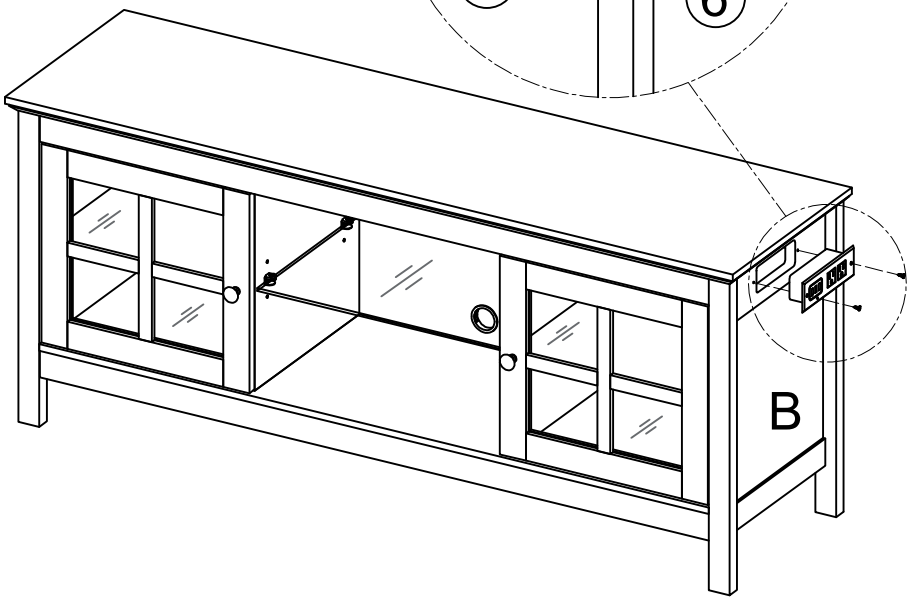



STEP 19

TIPPING RESTRAINT HARDWARE

21 x2

Note: We have included two Tipping Restraint Hardware set for this Unit. When properly installed, this restraint can provide protection against the unexpected tipping of the Unit due to small tremors, bumps or climbing. We strongly recommend mounting this hardware to a wall stud and your Unit.

Note: You must install the Tipping Restraint Hardware with the unit in use to prevent any accidents or damage to the unit.

