VINGLI
Living Better

INSTRUCTION MANUAL

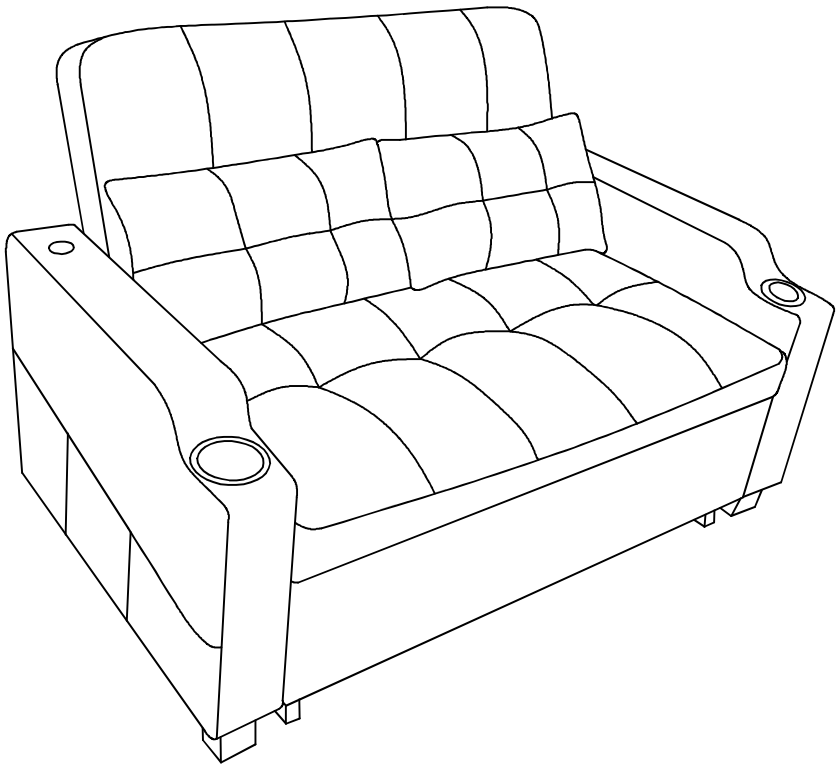

CUSTOMER SERVICE

Questions,Missing parts,Assembly help?
No need to return the product, we will gladly help and ship your replacement parts free of charge.Please contact us at support@vingli.com or go to www.vingli.com/pages/contact-us.

In order to assist you in a timely manner, please have the following information ready:

Product Name_____ Model #_____
Purchased at_____ Order Id_____

If you wish to return the product, please contact the retailer where the product was purchased.

Note: Please retain all boxes until you are certain that your product isn't damaged and that you do not wish to return it. Disposal of boxes may prevvent our ability to resolve your request.

PRE-ASSEMBLY INFORMATION

IMPORTANT :Please read this manual carefully before beginning assembly of this product. keep this manual for future reference.

NOTICE

- Please keep this manual and hand it over when you transfer the product.
- Please read the following instructions carefully and use the product accordingly.
- This summary may not include every detail of all variations and considered steps. Please contact us when further information and help are needed.
- Please do not exceed the weight limitations of this item.
- Do not stand on or use any part of this item as a step ladder.
- If any parts are missing, broken, damaged, or worn, stop using this item until repairs are made and/or factory replacement parts are installed.
- Please assemble the item in a spacious room and do not place the unwrapped product directly on the ground to avoid damage.
- Do not use this item in a way inconsistent with the manufacturer' s instructions as this could void the product warranty.
- Periodically inspect screw tightness while the product is in use. If necessary, retighten to ensure structural integrity.
- To avoid the potential dangers of suffocation, please keep all parts and packaging (films, plastic bags and foam,etc.) away from children and pets.
- Do not use or store this item in the proximity of open flame or flammable/combustible chemicals.
- Do not expose product to direct sunlight exposure or rain,and do not put it in a humid place. Failure to do so may accelerate the distortion or discoloration.

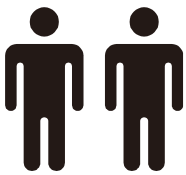

TWO PERSON ASSEMBLY



UP TO 30 MINUTES
FOR ASSEMBLY



WEIGHT LIMITATION
600 LBS

IMPORTANT

1.We recommend open the vacuum sealed cushions and pillows after the sofa frame is installed.

2.Remember to remove the parts packed under the bottom of seat frame.

3.Do not tighten bolts / screws completely until all bolts / screws are lined up and inserted into holes.

4.Do not over tighten screws and bolts to avoid stripping.

5.Please use hand tools to assemble this product. If you're using power tools, remember to set the tool to low torque to avoid damage.

COMPONENTS

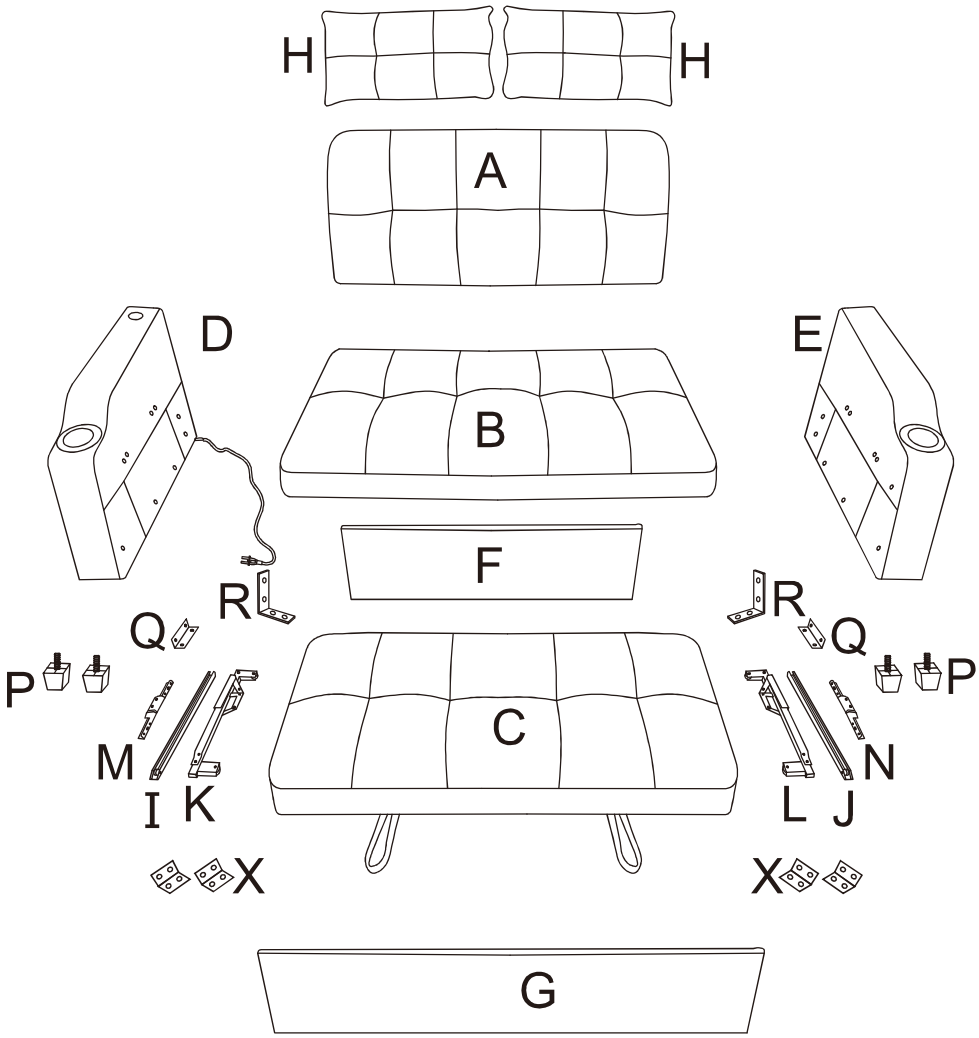

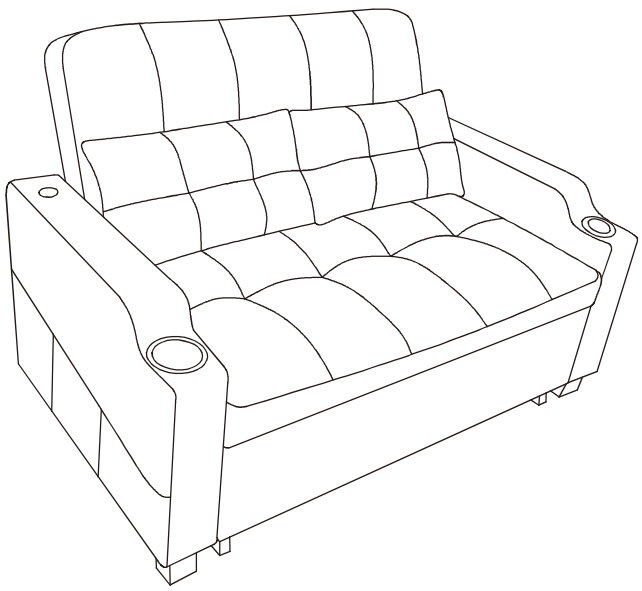

COMPONENTS

NO	PARTS	QTY	DESCRIPTION
A	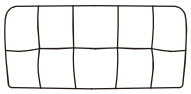	1 PC	Back Frame
B	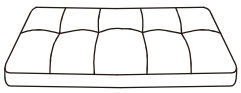	1 PC	Seat Frame
C	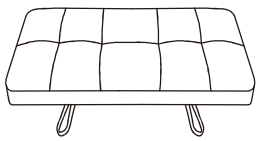	1 PC	Footrest
D	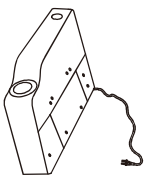	1 PC	Left Armrest
E		1 PC	Right Armrest
F	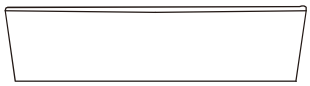	1 PC	Back Panel
G	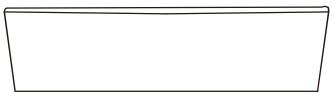	1 PC	Front Panel
H	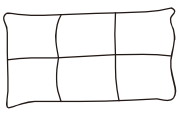	2 PCS	Lumbar Pillow
I		1 PC	Left Sliding Groove
J		1 PC	Right Sliding Groove
K		1 PC	Left Sofa Connector

COMPONENTS

NO	PARTS	QTY	DESCRIPTION
L		1 PC	Right Sofa Connector
M		1 PC	Back & Seat Left Connector
N		1 PC	Back & Seat Right Connector
X		4 PCS	Armrest & Seat Connector
P		4 PCS	Plastic Leg
Q		2 PCS	Back Panel Connector
R		2 PCS	Front Panel Connector
S		38 PCS+2	Short Screw M6*25mm
T		14 PCS+1	Middle Screw M6*40mm
V		1 PC	Wrench
O		4 PCS+1	Plastic Gasket

ASSEMBLY STEPS

STEP 1

1. Open the velcro on the Armrests (D&E) and remove Lumbar Pillow (H)
2. Screw Legs (P) and Washer (O) clockwise into the bottom of Armrests (D&E)

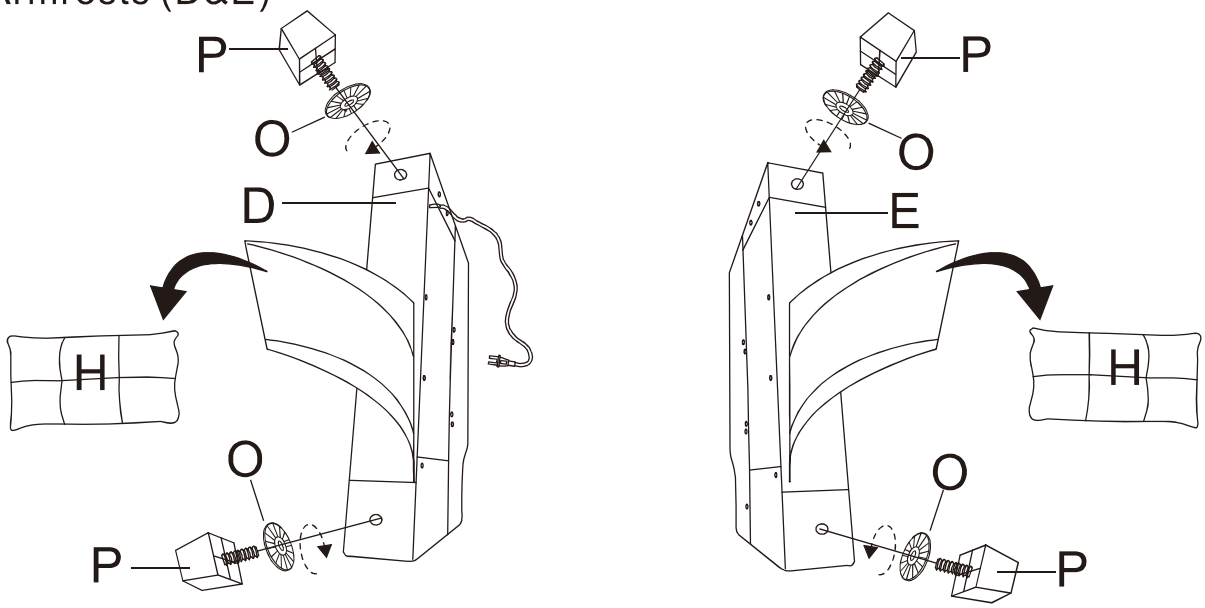

STEP 2

Attach the Seat Frame (B) to the Back Frame (A) with Back & Seat Left Connector (M) and Back & Seat Right Connector (N), tighten with Short Screw (S)

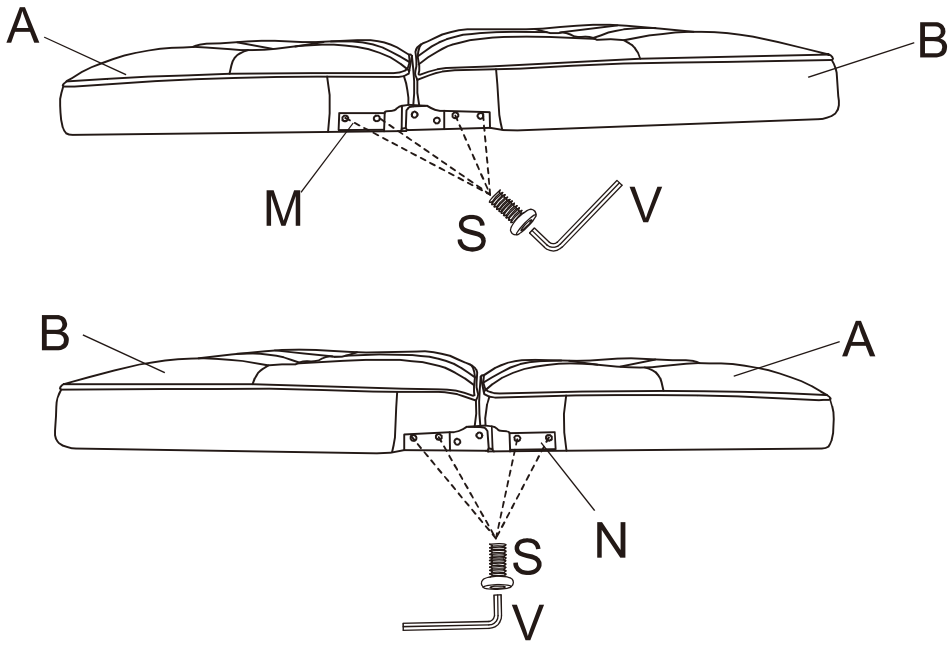

ASSEMBLY STEPS

STEP 3

Secure the Armrest & Seat Connector (X) to Seat Frame (B) using Long Screws (T)

Secure the Left and Right Armrests (D&E) to Seat Frame (B) using Armrest & Seat Connector (X), then secure them with Short Screw (S)

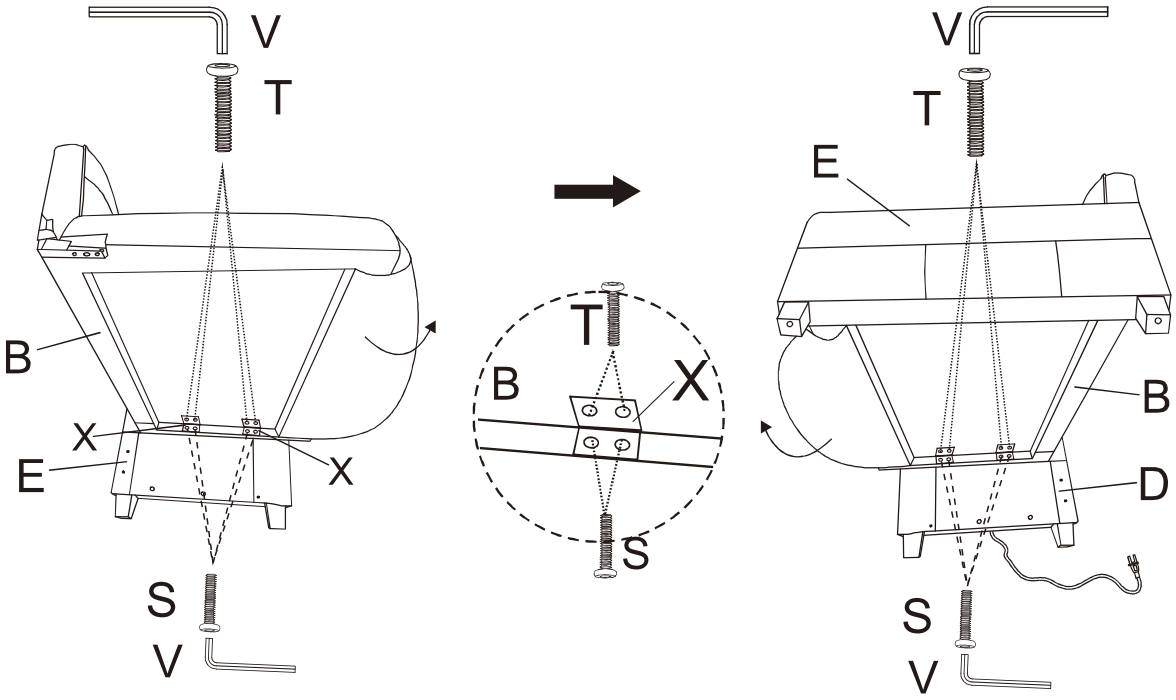

STEP 4

Attach the Back Panel Connector (Q) to the Back Panel (F) using Short Screw(S)

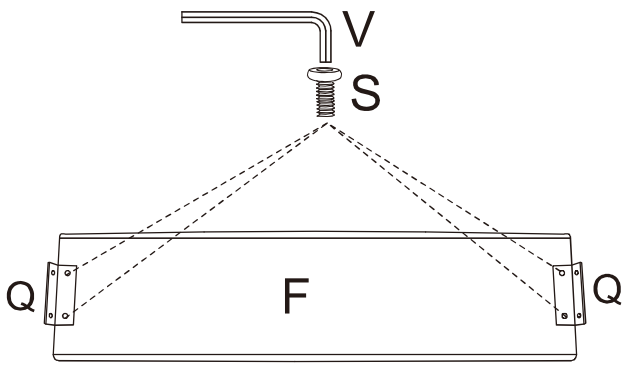

ASSEMBLY STEPS

STEP 5

Attach the Back Panel (F) from step 4 to the Armrests (D&E) using Short Screw (S)
Tighten all screws from step 3

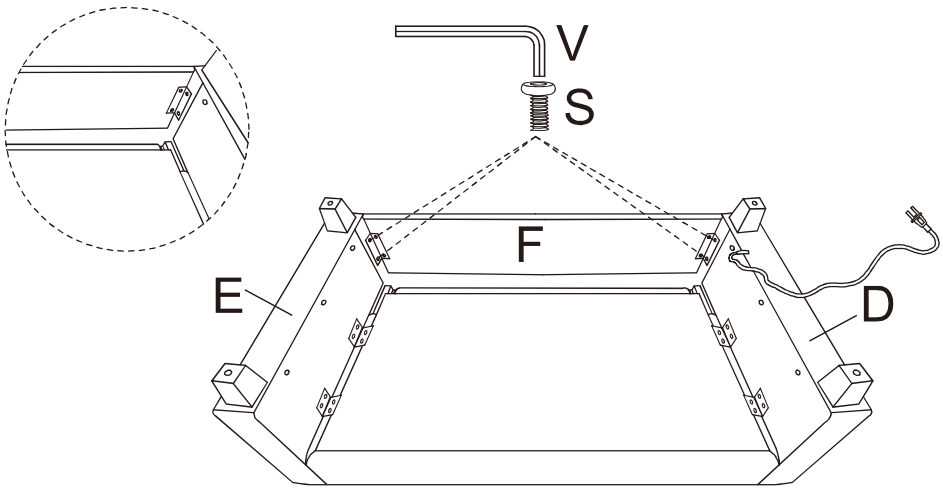

STEP 6

1. Attach the Front Panel Connector (R) to the Left & Right Sofa Connector (K & L) using Short Screw (S)
2. Attach the Left & Right Sofa Connector (K & L) to Front Panel (G) using Short Screw (S)

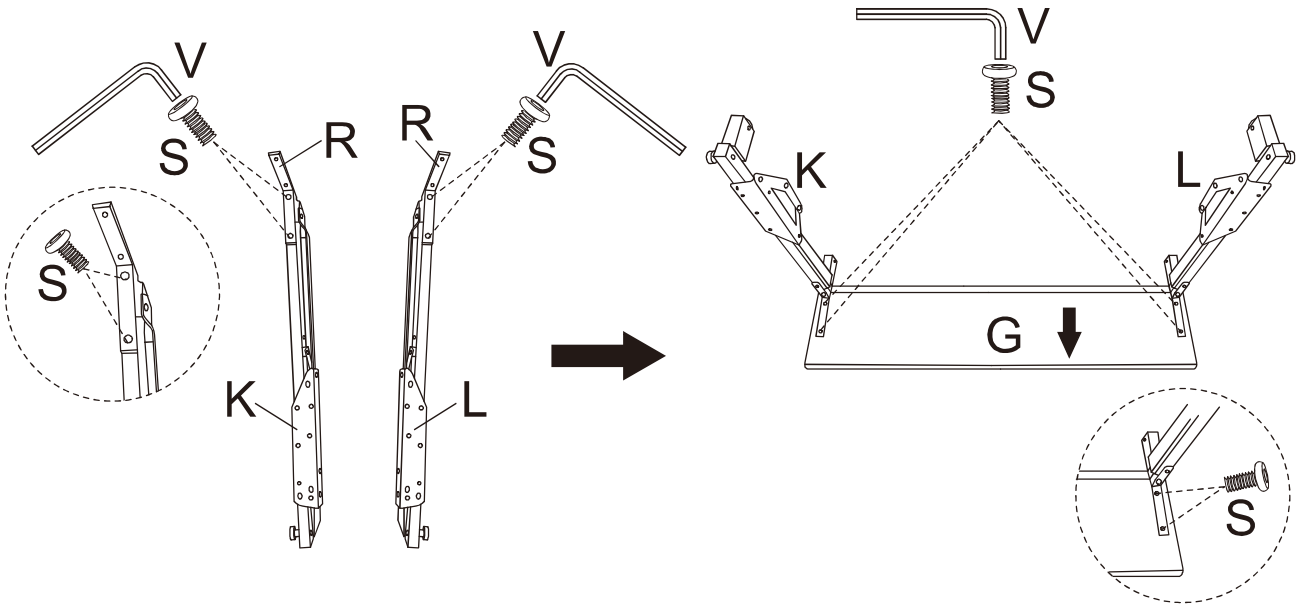

ASSEMBLY STEPS

STEP 7

1. Unfold the Left & Right Sofa Connector (K & L) as shown below
2. Attach the Left & Right Sofa Connector (K & L) to the Footrest (C) using the Long Screw(T)

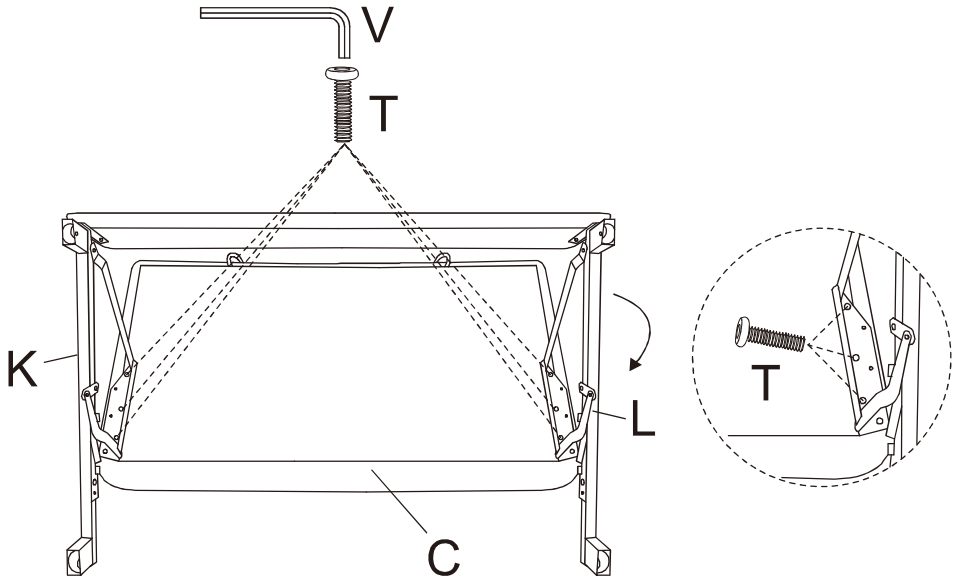

STEP 8

1. Secure the Sliding Groove (I&J) to the Armrests (D&E) using the Short Screws(S)
2. Align Footrest (C) with Sliding Groove (I&J) as shown in the illustration

Note: For easier assembly, it is recommended to fold the Left & Right Sofa Connector (K & L) from Step 7 before installation

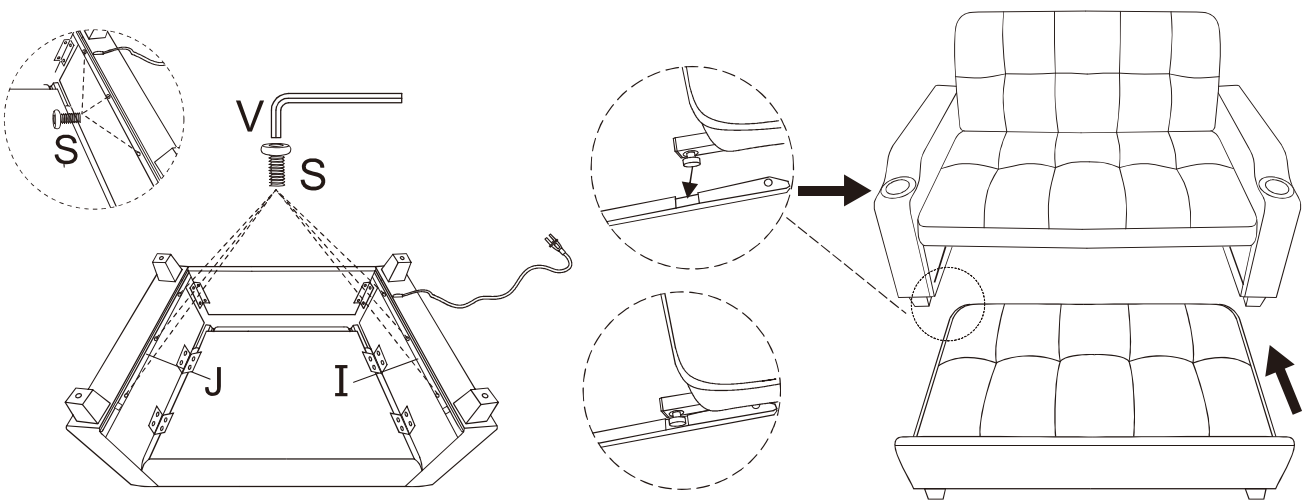

ASSEMBLY STEPS

STEP 9

If you confirmed the sofa frame fits your space and are satisfied with this product, then just go ahead to open the vacuum(H)

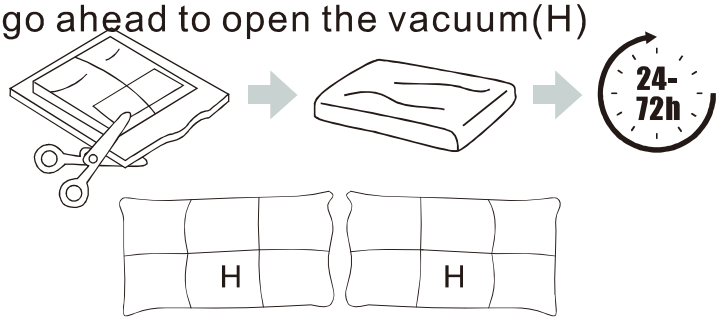

Place the Lumbar Pillow (H)

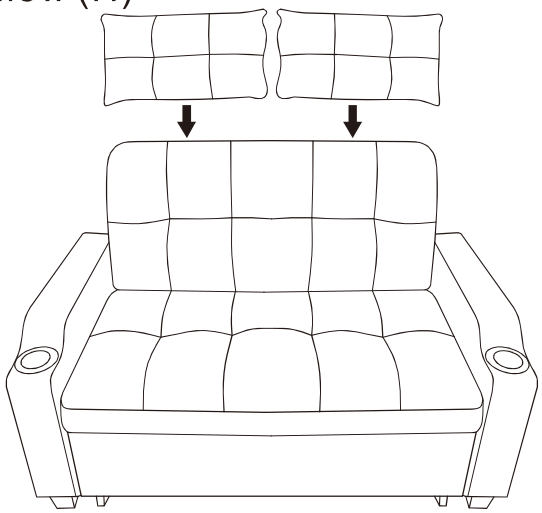

STEP 10

Well done!

Adjust the backrest and find the mode suits you!
1 -bed mode
2 -recliner mode
3 - chair mode
4 -push the backrest and release the backrest adjustment

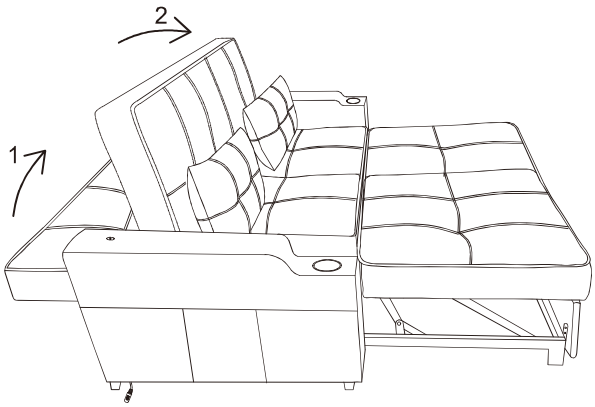

ASSEMBLY STEPS

STEP 11

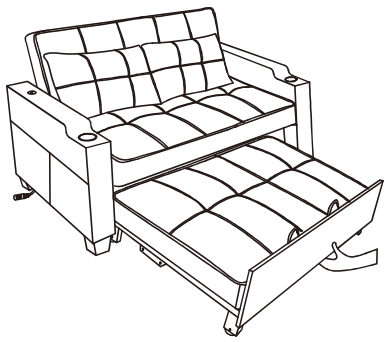

STEP 1

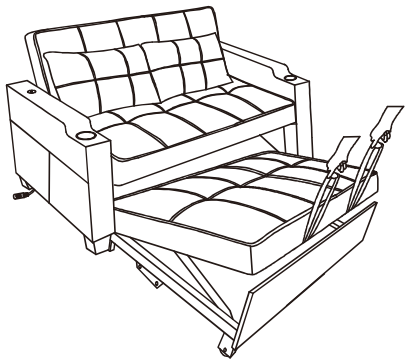

STEP 2

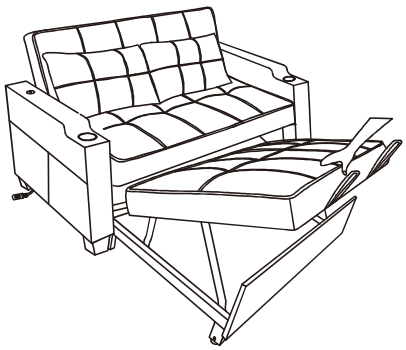

STEP 3

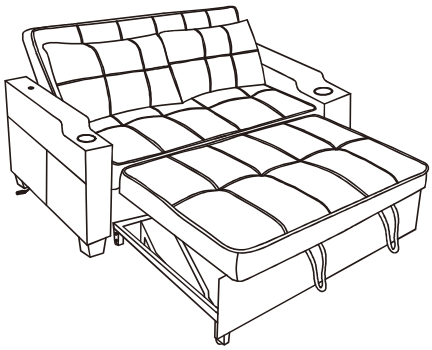

STEP 4

