PRODUCT DRAWING

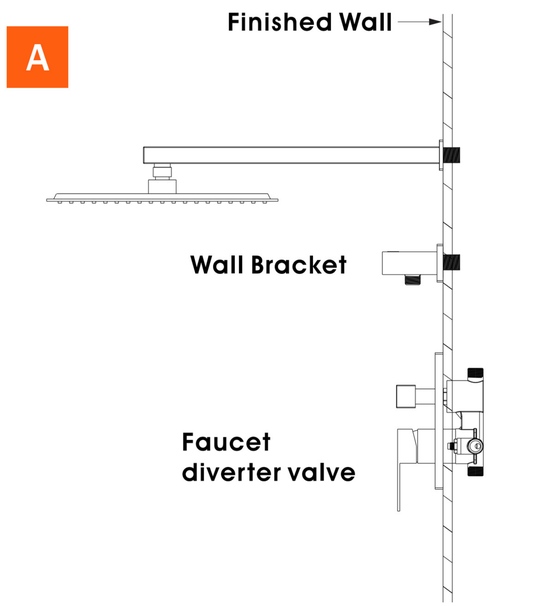

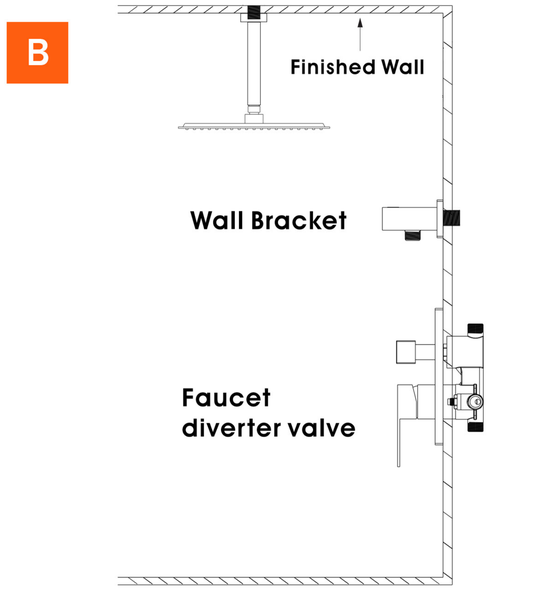

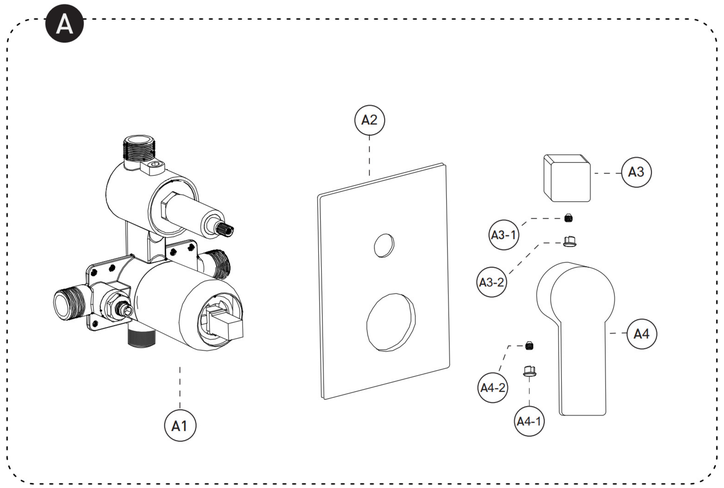

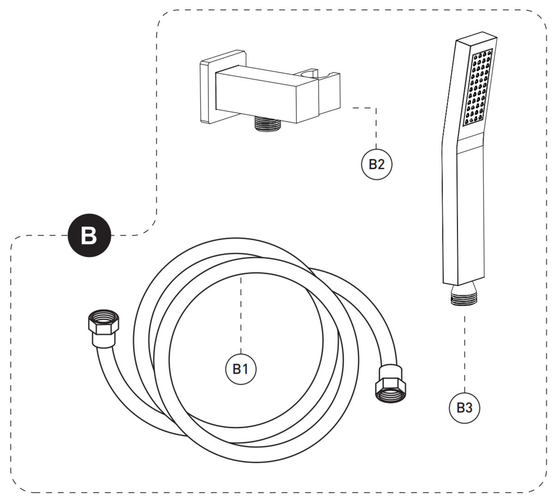

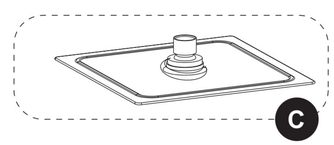

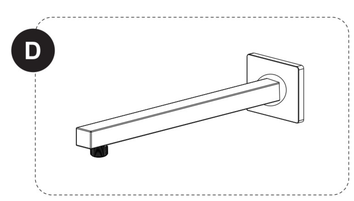

No.	Description
A	Pressure balanced diverter valve
A1	Valve
A2	Face plate with sealjoint
A3	Diverter knob kit
A3-1	Allen screw (A-3 included)
A3-2	Trim cap (A-3 included)
A4	Shower valve handle
A4-1	Trim cap (A-4 included)
A4-2	Allen screw (A-4 included)
B	Handheld Shower Kit with Flexible Hose
B1	Flexible hose
B2	Wall Bracket
B3	Handheld Shower
C	Shower head
D	Shower arm and flange kit
Z	Accessories Package

For Repair And Warranty (Spare Parts)	For Installation (Spare Parts)
	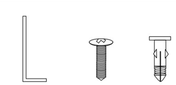

SHOWER SYSTEM FAUCET

Installation instruction

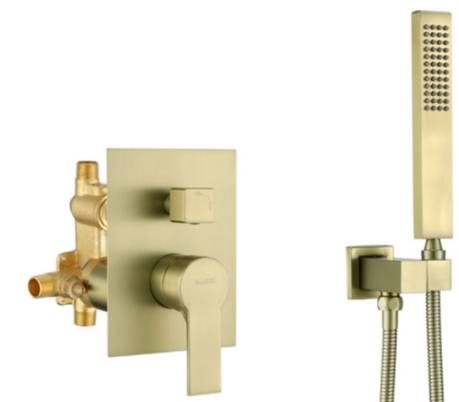

MB/BN/BG/CH/ORB

CARE INSTRUCTIONS

Rinse the product with clear water. Dry the product with a soft cloth.

DO NOT:

Use abrasive cleansers, cloths, or paper towels. Use any cleaning agents containing acid, polish, wax, alcohol, ammonia, bleach, solvent or any other corrosive or harsh cheminalc cleansers.

INSTALLATION STEPS

IMPORTANT

We recommends using a professional plumber for all installtion and repair. Please inform yourself about the canadian plumbing code`s regulations and your local municipality plumbing codes before instaillation.the canadian plumbing code requires the installation of urge arresting devices to eliminate water hammering.allow an adequate opening in orderto easilyaccess connections or other plumbing devicesfor maintenance or repair.

RECOMMENDED TOOLS

Plumber's putty

Thread seal tape

Included

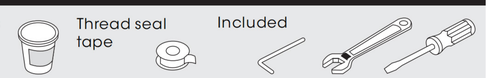

* Apply plumber's putty under the plastic cover deck plcta to seal your installation.
Appliquez du mastic pour plombier sous la sous-plaque de plastique pour rendre votre installation étanche.

CONNECTION ADVICE

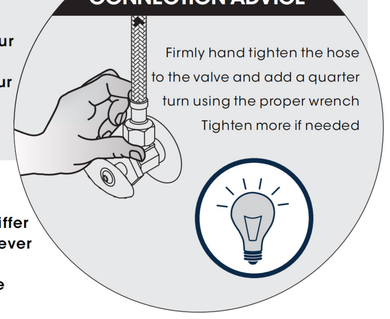

Firmly hand tighten the hose to the valve and add a quarter turn using the proper wrench
Tighten more if needed

The model shown in the installation steps may differ from the one in box however connection type and installation steps are the same.

BEFORE YOU BEGIN

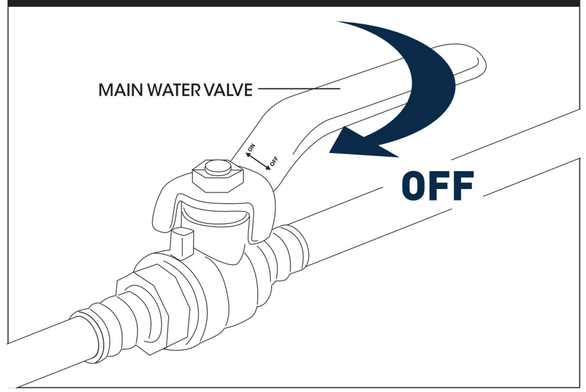

INSTALLATION WAY

ATTENTION

A

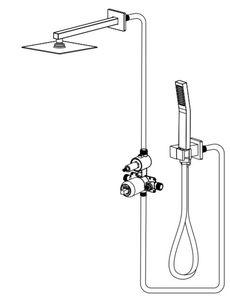

Rough-In-Installation primaire

ATTENTION

WHEN USING A HANDSHOWER, IT NEEDS TO BE CONNECTED TO THE TOP OUTLET

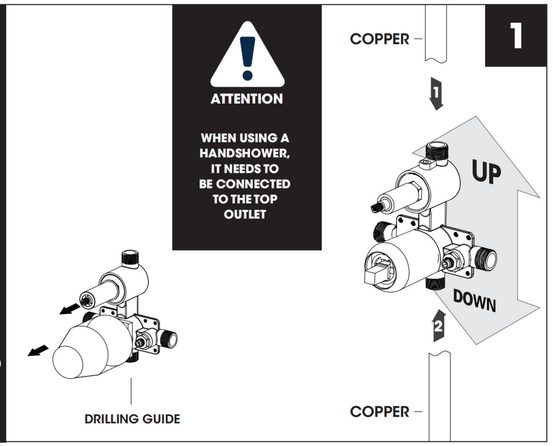

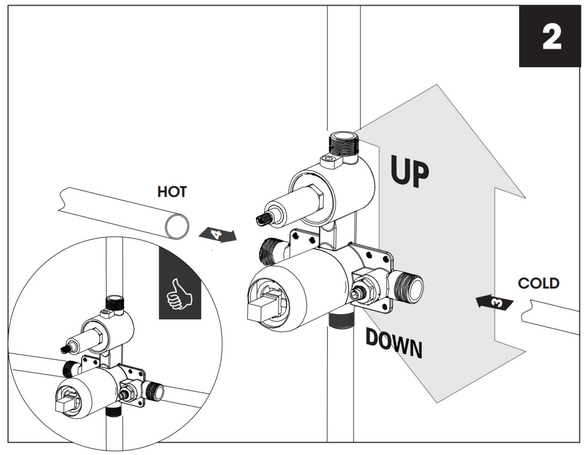

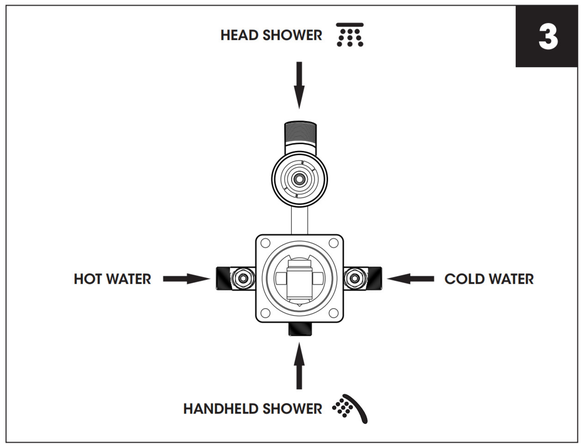

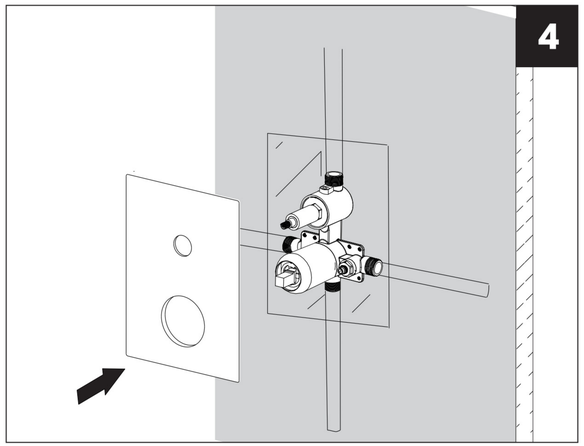

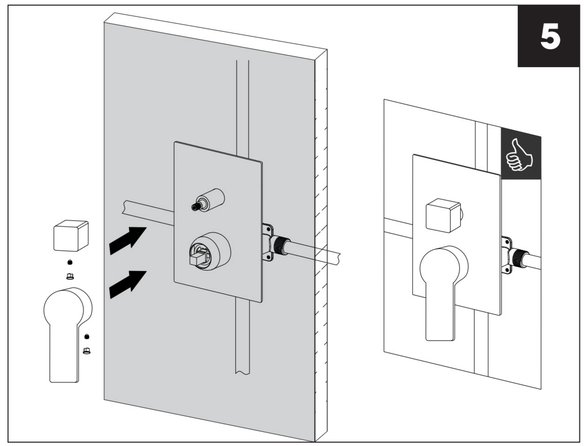

HEAD SHOWER

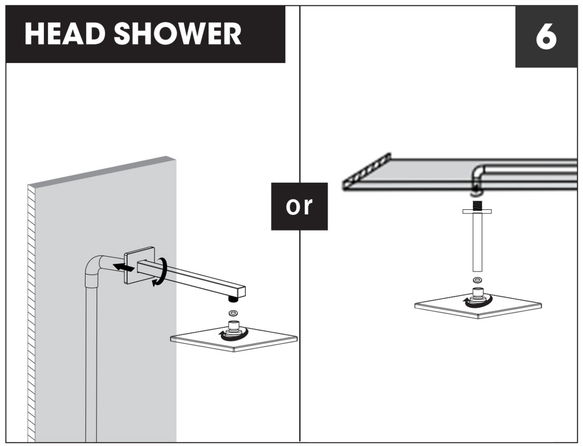
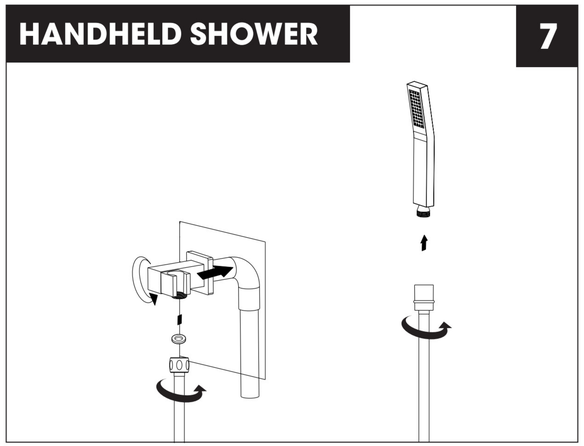
HANDHELD SHOWER