ASSEMBLY AND INSTALLATION INSTRUCTIONS

WARNING: TO AVOID RISK OF ELECTRICAL SHOCK, BE SURE TO SHUT OFF POWER BEFORE INSTALLING OR SERVICING THIS FIXTURE.

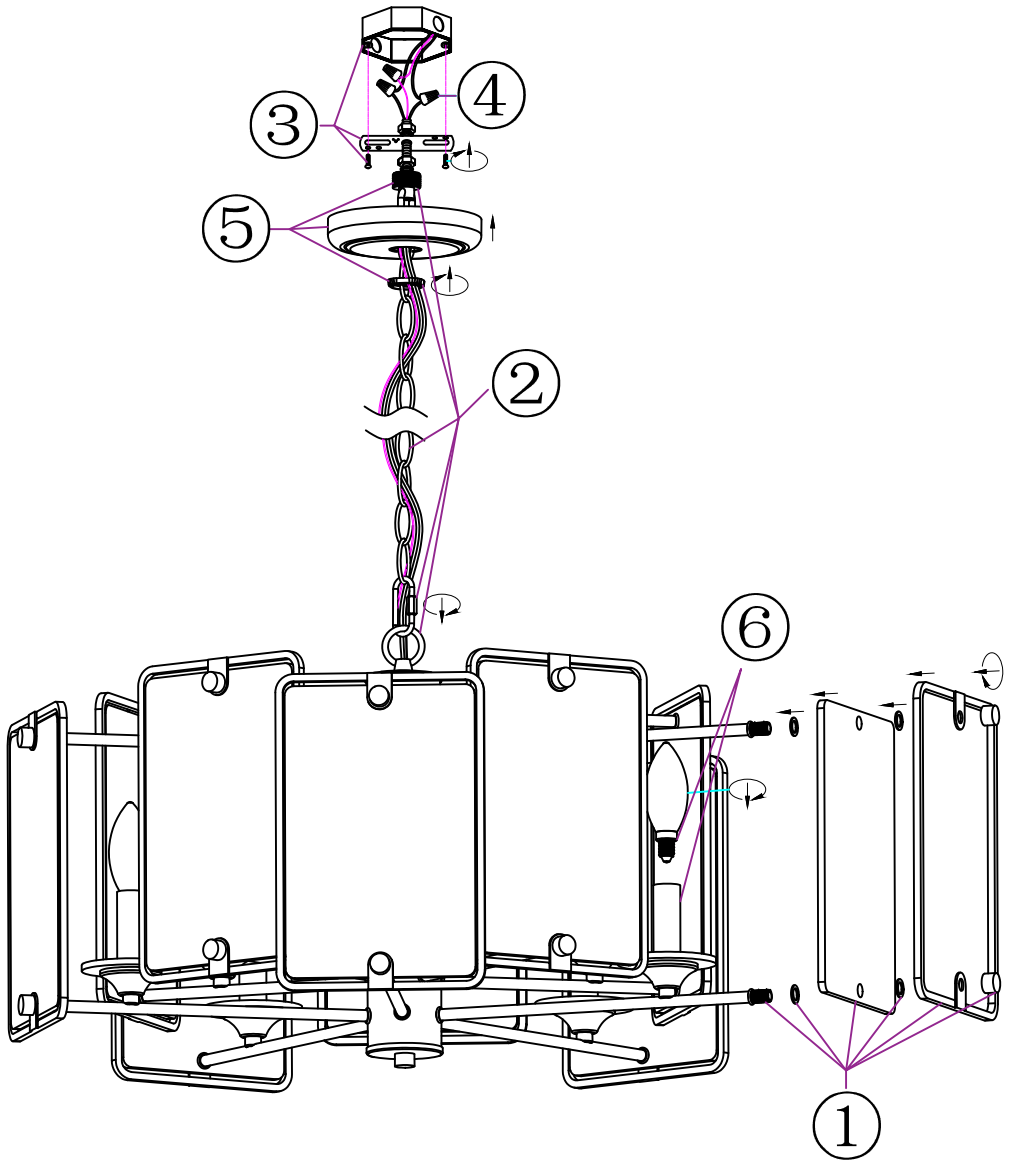

Before You Begin:

- Ensure power is turned off at the circuit breaker before installation.
- Read all instructions carefully.
- Installation should be performed by a qualified electrician if you are unfamiliar with wiring.

Step-by-Step Installation:

1.Assemble plastic washers, glass panels, additional washers, and square metal frames onto the upper and lower metal tubes. Secure the glass panels using the provided decorative nuts.
2.Loosen the quick link to adjust chain and cord length. Thread the cord through the chain, screw collar loop, and canopy. Connect one end of the chain to the loop and the other end to the fixture's hanging ring.
3.Secure the mounting bracket to a UL-listed junction box using the provided screws.
4.Wiring Connections
·Use wire connectors to connect the fixture's positive wire, negative wire to the corresponding wires from the junction box. Connect the ground wires to the grounding terminal.
·Ensure no exposed conductors remain outside wire connectors or outside the junction box.
5.Secure the canopy to the mounting bracket using the retaining ring.
6.Install light bulbs into sockets (bulbs not included).
7.Restore power and test operation.
Installation is complete.

Safety Instructions:

To avoid fire, shock, and serious personal injury, follow all instructions carefully.
1. Do not install or use the light fixture if any part is missing or damaged.
2. To avoid possible electrical shock, be sure electricity is turned off at the main fuse or circuit breaker box before wiring.
3. Make certain no bare wires are exposed outside the wire connectors.
4. All wiring must conform to national and local electrical codes.
5. Follow the recommended instructions for the proper method of wiring your new light fixture. If you feel you do not have enough electrical wiring knowledge or experience, have your light fixture installed by a licensed electrician. Any electrical work not described in this manual should be performed by a licensed electrician.