Installation Manual

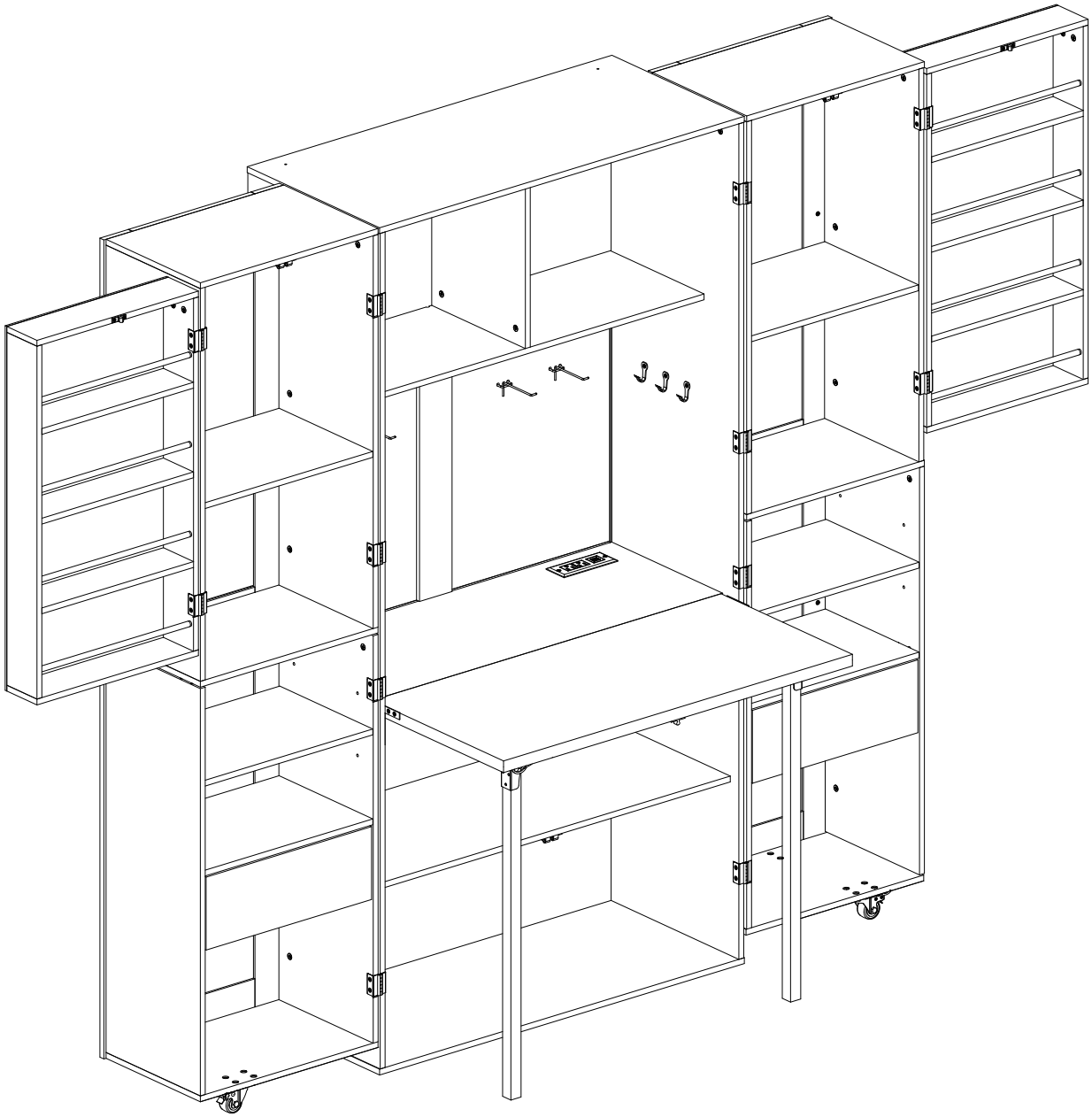

Made in China

Hi! Dear buyer, Thank you for choosing our products. Please carefully follow the assembly instructions below to ensure proper assembly and to avoid any potential issues.

Recommendations Before Beginning Assembly:
1. Read instructions, cover to cover
2. Check that you have all the necessary tools listed in the instruction manual.
3. Assemble on a clean non-marring surface.
4. Have at least 2-3 adults on hand for assembly.
5. Save all packaging until finished.
6. Keep small parts and tools away from children.

Assembly Notice:
- Lay out all the parts and hardware in an organized manner.
- Identify each part and match them with the corresponding labels in the manual.
- Assemble the product in the sequence specified to ensure stability.
- Do not overtighten screws during assembly as it may damage the parts or strip the threads.
- Double-check each step before proceeding to the next one.
- When you have completed assembly, we suggest you have more than one person to assist you with lifting and placing the product.

** What should you do when you encounter problems?Don't Worry—We'll Take Care of Everything!
If you encounter any difficulties (e.g., missing parts, damaged parts, unsuccessful assembly, etc.) during assembly, do not hesitate to contact the seller directly. The after-sales team will get back to you within 24 hours.

- If the product is damaged or missing any components, we are happy to provide replacement parts or a new product at no cost to you.
- To assist us in resolving your issue quickly, please contact our support team and provide clear photos of the damaged item or missing parts. This will help us identify the problem accurately and ensure a prompt solution. √√

** Return Policy
IMPORTANT NOTICE: Dear, If you encounter any issues with the product (quality-related or otherwise) that may require a refund or exchange, there is no need to initiate a return immediately. Please contact the seller directly, and in most cases, we can resolve the issue without requiring you to return the item. Thank you!

We hope these instructions help you successfully assemble the product. If you have any further questions or concerns, please feel free to contact the seller for assistance. Enjoy your new furniture!

WARNUNG

Bei unerwarter Montage oder Verwendung können schwere oder tödliche Verletzung auftreten.

1. Legen Sie in den Montageprozess alle Teile weg von Babys oder Kindern.

2.Stellen Sie sicher,dass der gebohrte Wandbereich frei von verborgenen Stromkabeln,Wasser-und Gasleitungen ist, wenn Sie dieses Produkt an der Wand befestigen.

3. Die Verwendung von kippsicherungen kann die Gefahr eines Kippens nur verringern,jedoch nicht beseitigen.

4. Setzen Sie bitte keine schweren Gegenstände auf dieses Produkt, es sei denn, dass das Produkt speziell fur die Unterbringung konzipiert wird.

5. Legen Sie bitte die schwersten Gegenstände auf das unterste Regal.

6. Erlauben Sie nie Kindern, auf Schubladen, Turen oder Regale zu klettern oder zu knallen.

Parts List

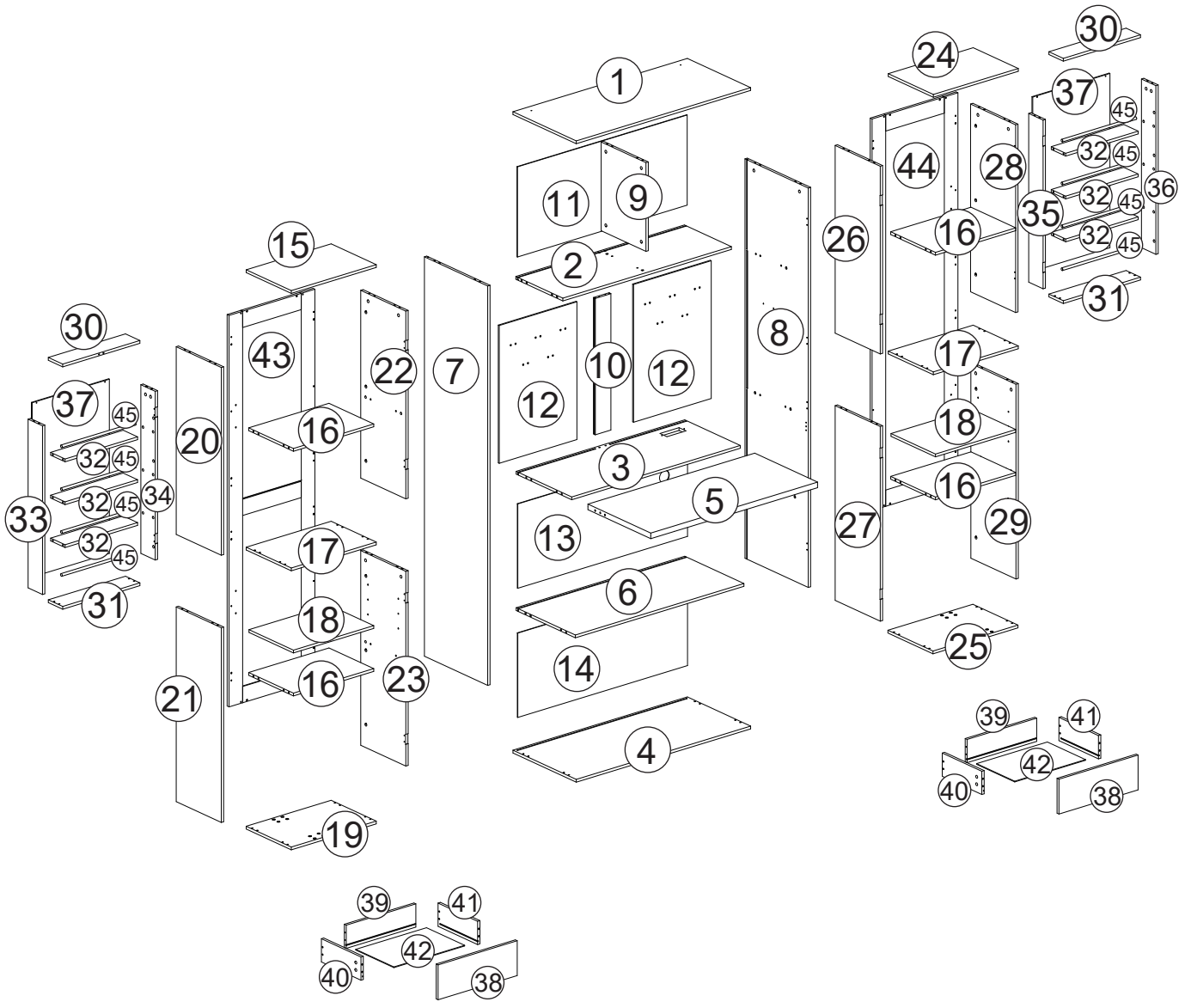
1
2
3
4
5
6
7
8
9
10
11
12
12
13
14
15
16
16
16
16
17
17
18
18
19
20
21
22
23
24
25
26
27
28
29
30
30
31
31
32
32
32
32
32
32
32
33
34
35
36
37
37
38
39
39
40
41
41
42
42
43
44
45
45
45
45
45
45
45

Parts List

1 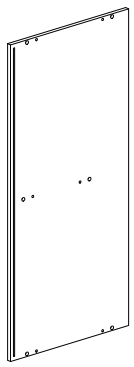 x1	2 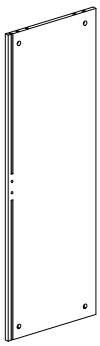 x1	3  x1
4  x1	5 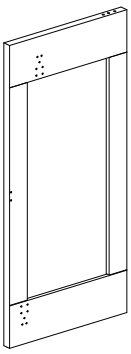 x1	6 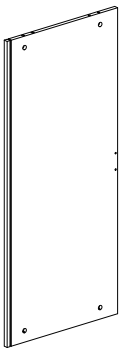 x1
7  x1	8 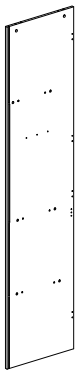 x1	9 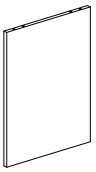 x1
10  x1	11 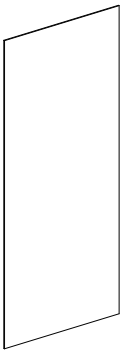 x1	12 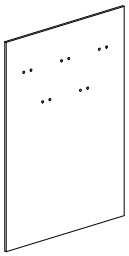 x2
13 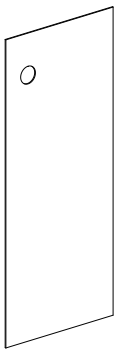 x1	14 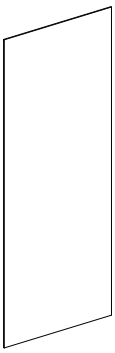 x1	15 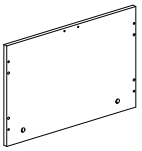 x1

Parts List

16 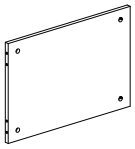 x4	17 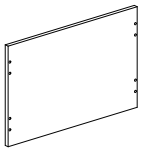 x2	18 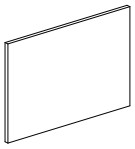 x2
19 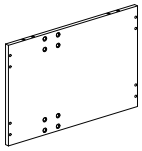 x1	20 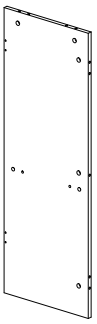 x1	21 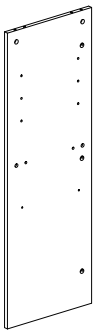 x1
22 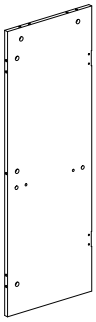 x1	23 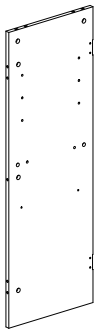 x1	24 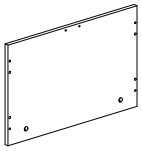 x1
25 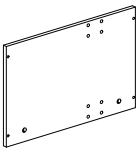 x1	26 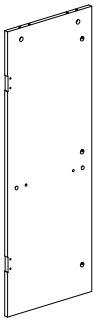 x1	27 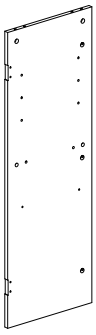 x1
28 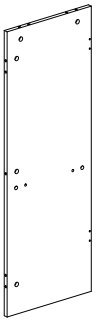 x1	29 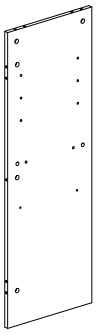 x1	30  x2

Parts List

31  x2	32  x6	33  x1
34  x1	35  x1	36 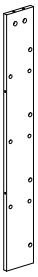 x1
37 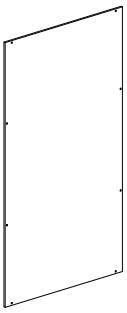 x2	38 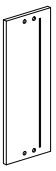 x2	39  x2
40  x2	41  x2	42 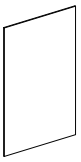 x2
43 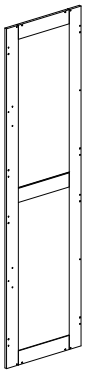 x1	44 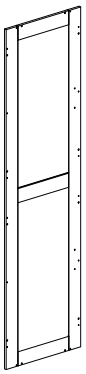 x1	45  x8

Hardware List

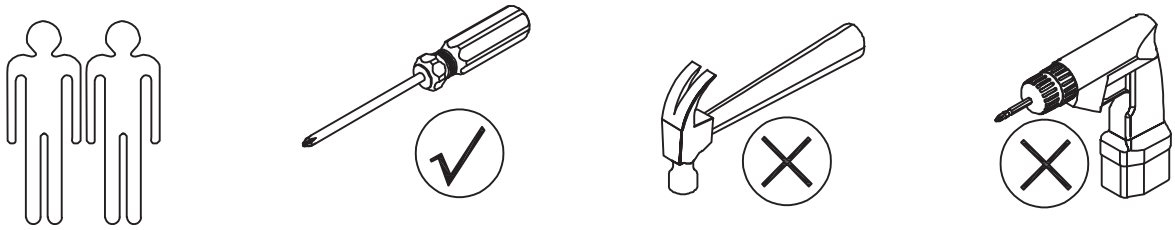

A 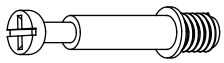 Ø6x40 68PCS	B 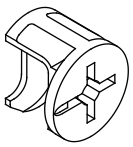 Ø12x10 124PCS	C 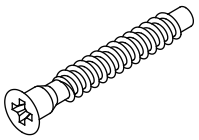 M5x40 40PCS	D 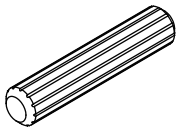 Ø6x40 96PCS	E 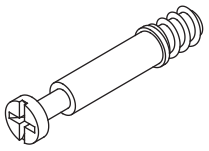 Ø6x40 56PCS
F 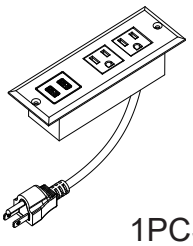 1PCS	G 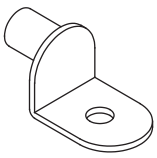 8PCS	H 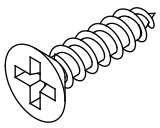 M3.5x12 68PCS	I 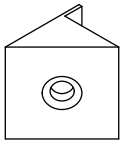 36PCS	J 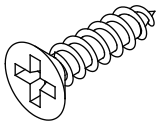 M3.5x14 56PCS
K 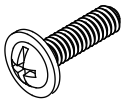 M4x18 8PCS	L 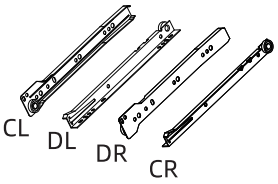 250mm 2PCS	M 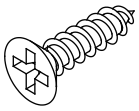 M3x14 24PCS	N 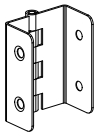 15mm 8PCS	O 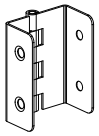 12mm 4PCS
P  4PCS	Q 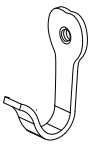 6PCS	R 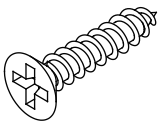 M3.5x20 16PCS	S 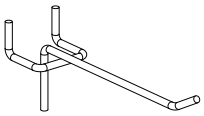 10PCS	T 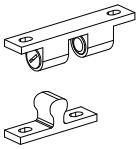 3PCS
U 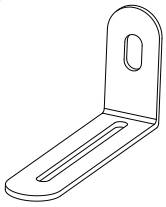 2PCS	V 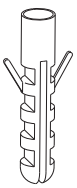 M6x30 2PCS	W 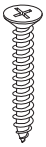 M4x40 2PCS	X  M6x12mm 16PCS	Y 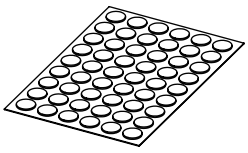 Ø21 1PC

Hardware List

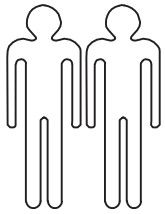
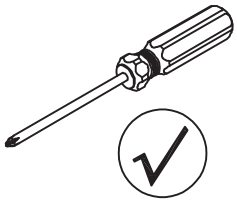
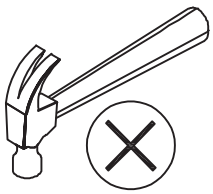
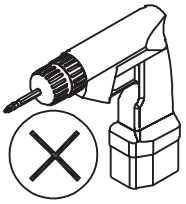

Z	A1	B1	C1	
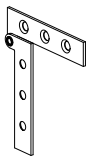 2PCS	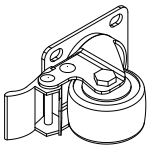 15" 4PCS	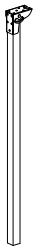 1PC	 1PC	

CAM BOLT INSTALLATION AS BELOW:

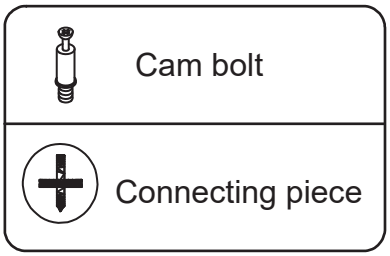



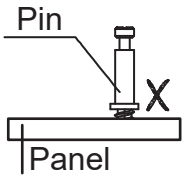

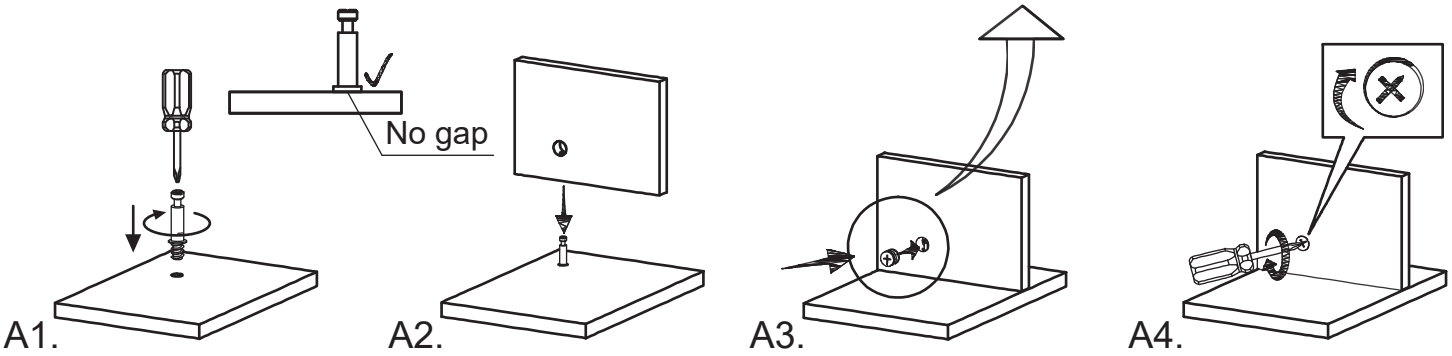

EN

After opening the packaging, please lay the foam in the packaging flat on the ground to place the boards, to prevent them from being damaged by collision.

DE

Nachdem Sie die Verpackung geöffnet haben, legen Sie bitte den Schaumstoff auf den Boden, um die Platten vor Beschädigungen zu schützen.

Assembly

1

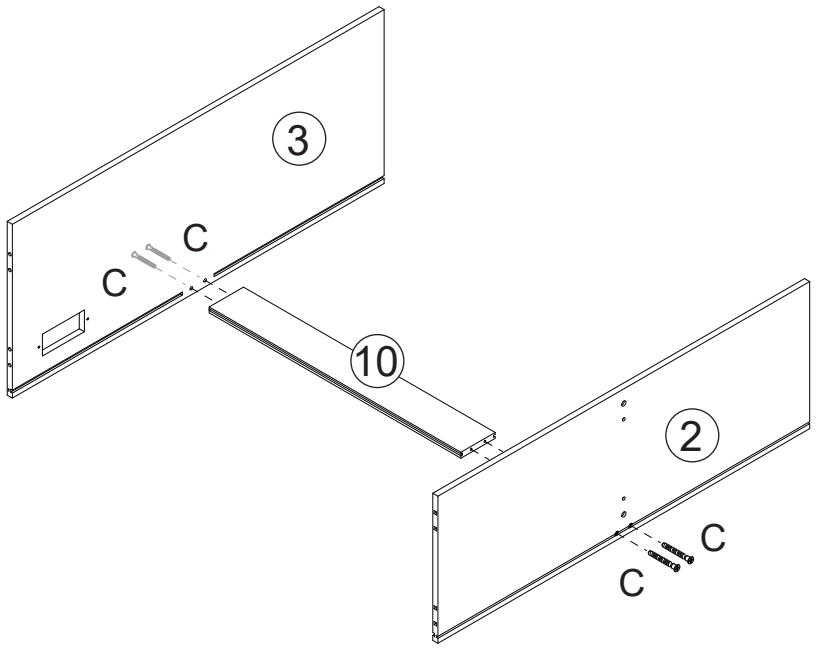

C 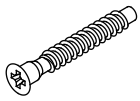 x4

2

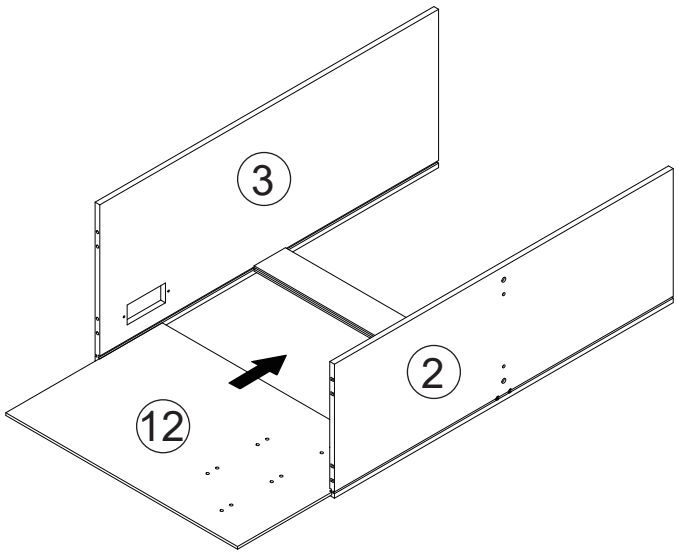

Assembly

3

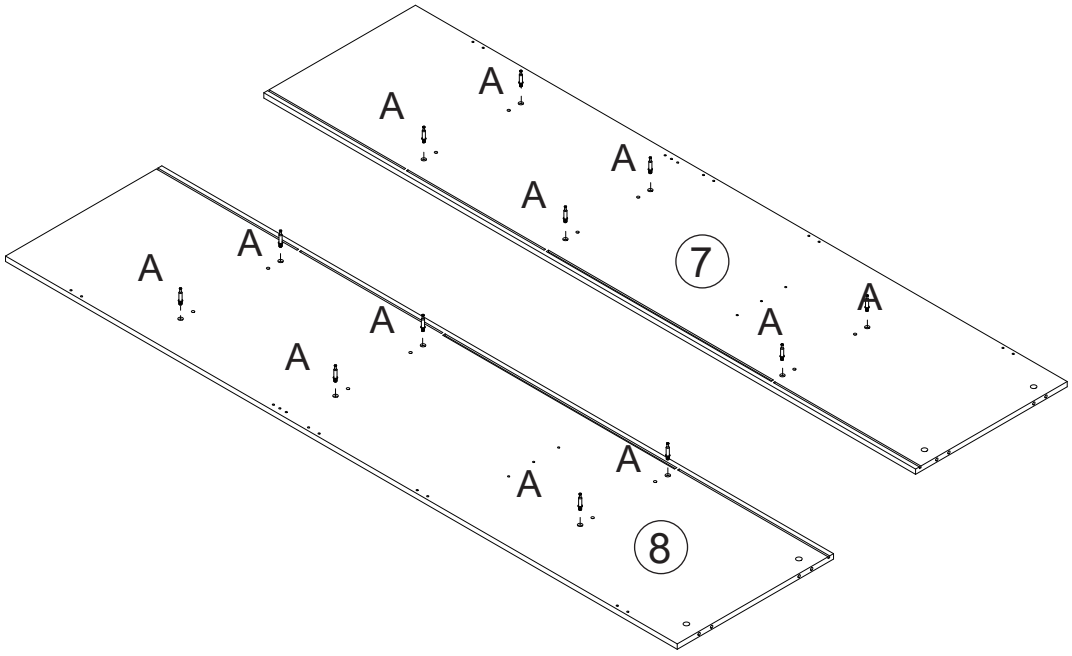

A	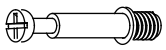	x12

4

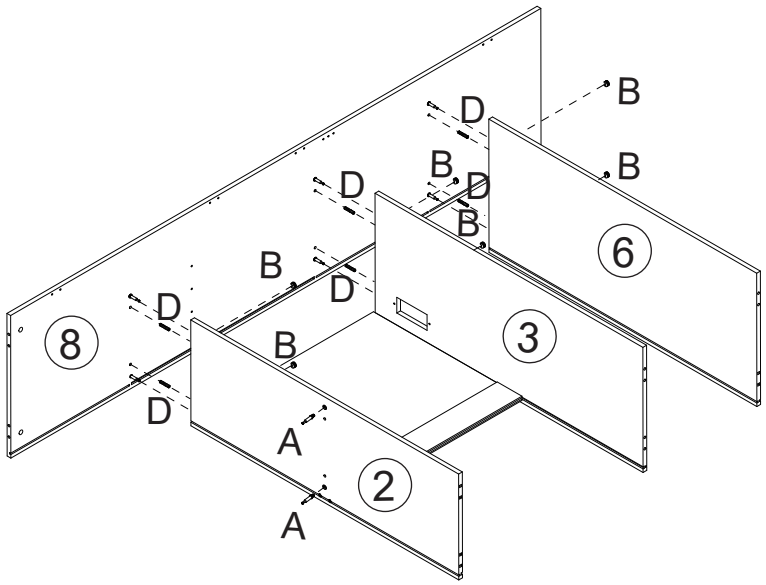

A	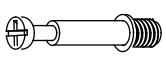	x2	B		x6
D	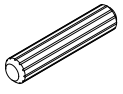	x6			

Assembly

5

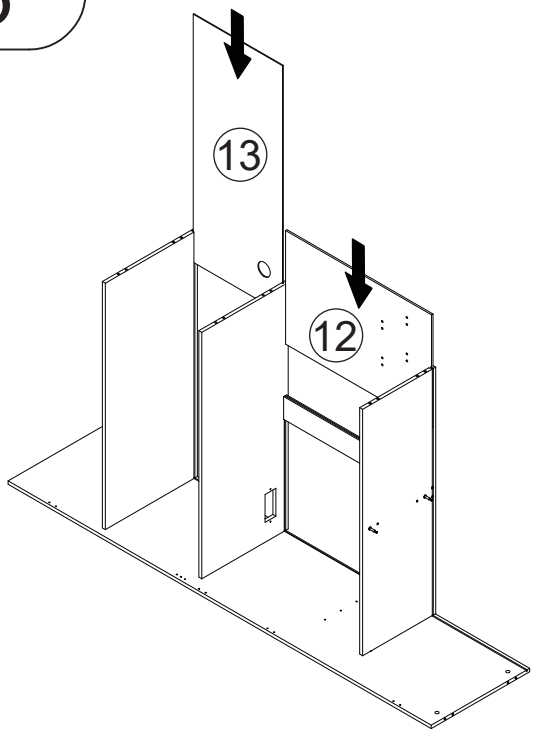

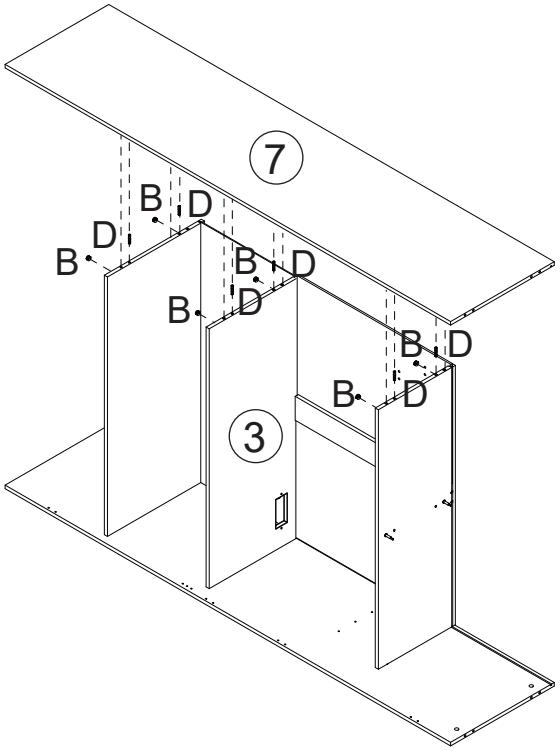

B		x6	D	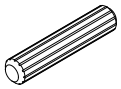	x6

6

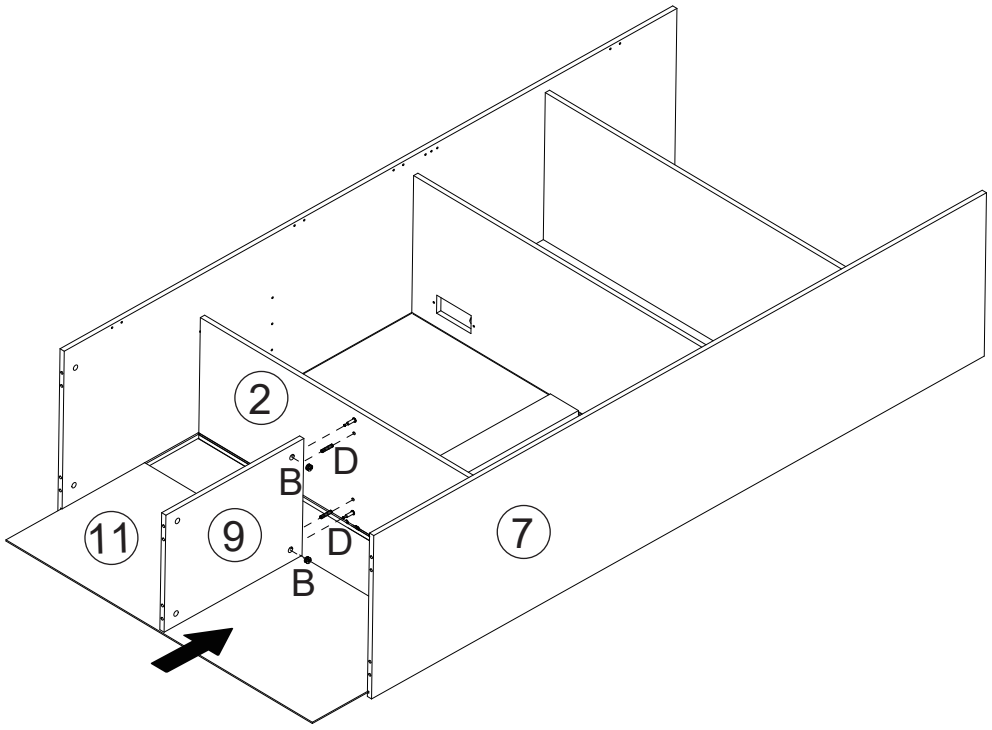

B		x2	D	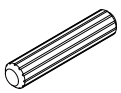	x2

Assembly

7

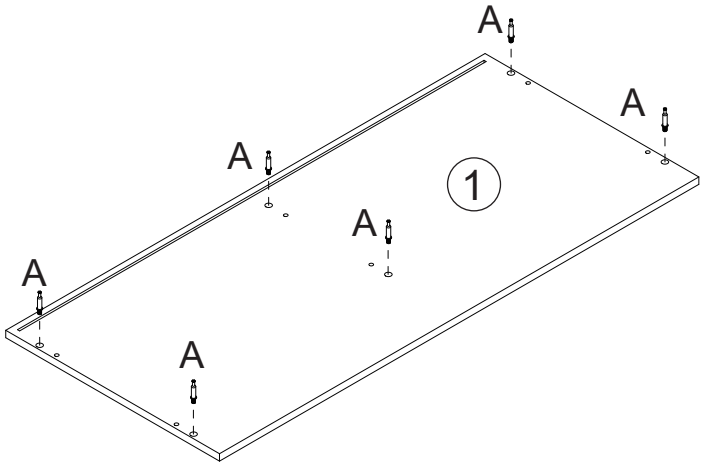

A 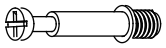 x6

8

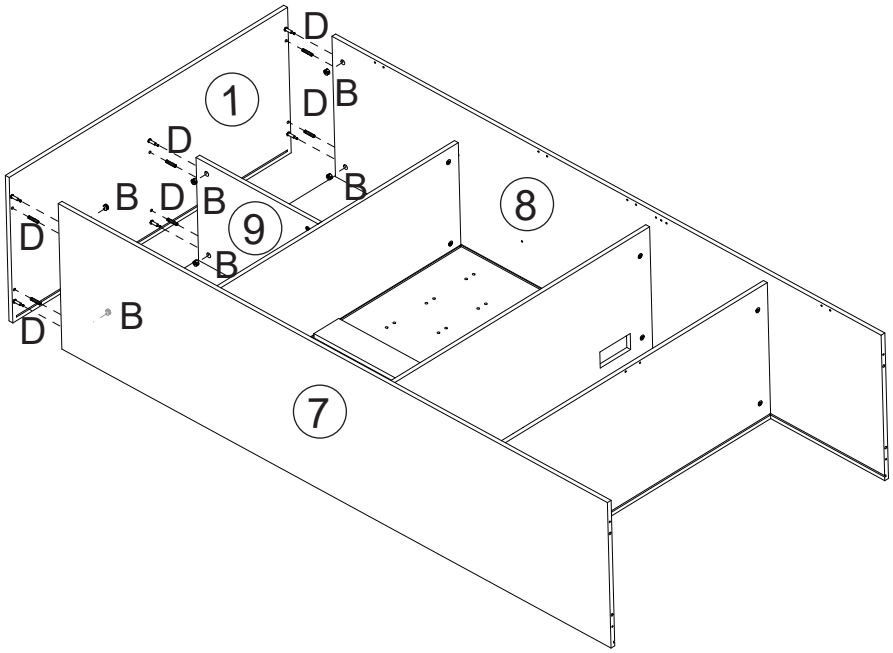

B  x6

D 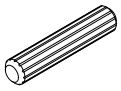 x6

Assembly

9

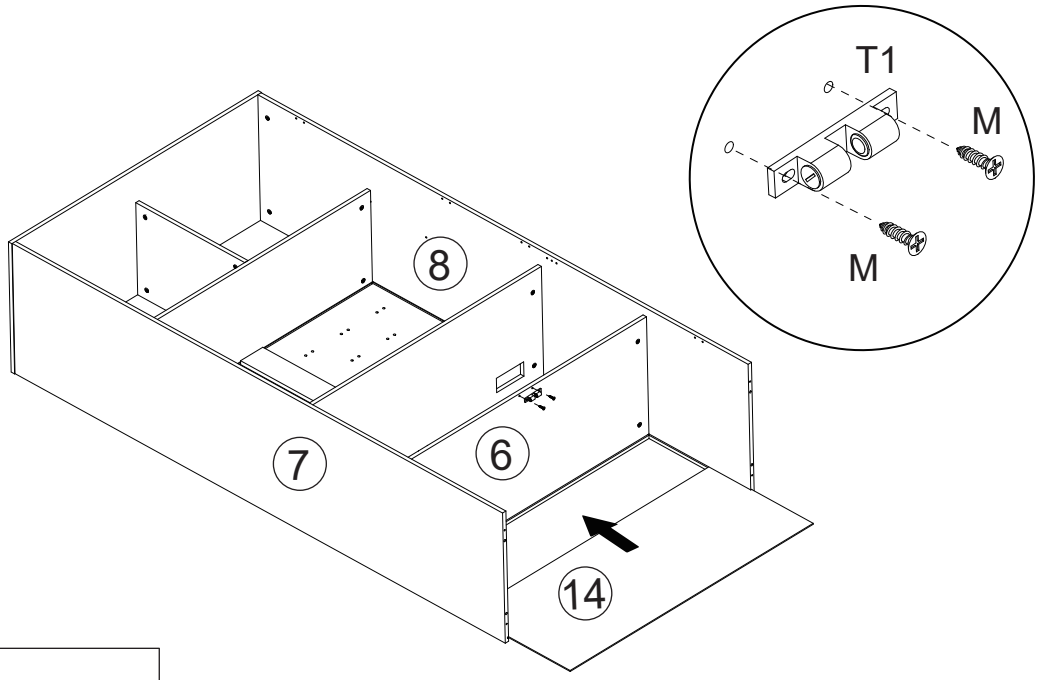

M	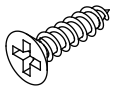	x2
T1	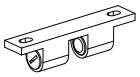	x1

10

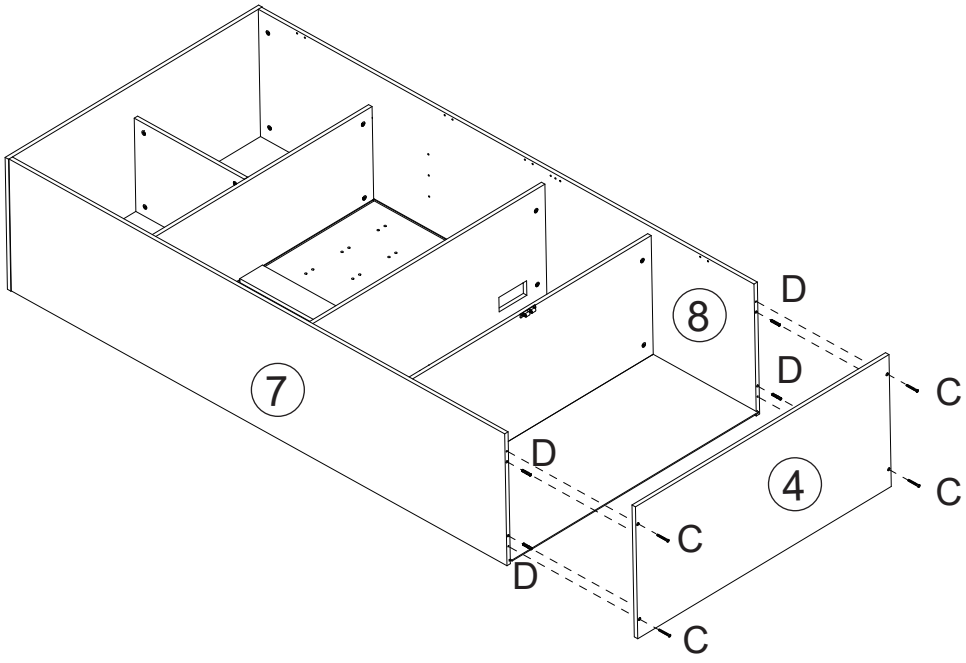

C	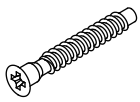	x4	D		x4

Assembly

11

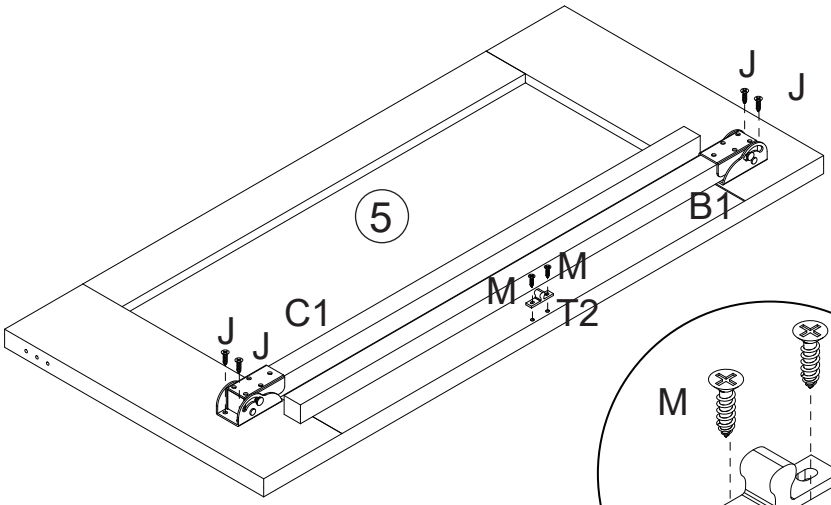

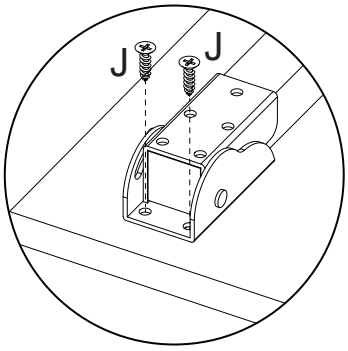

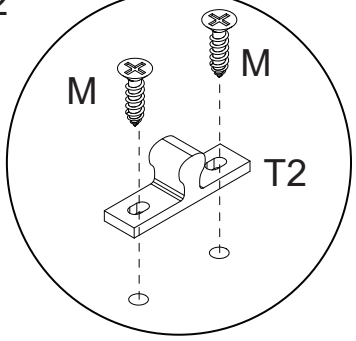

M	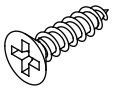	x2	J	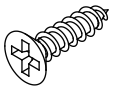	x4
T2	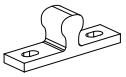	x1	B1		x1
C1		x1			

12

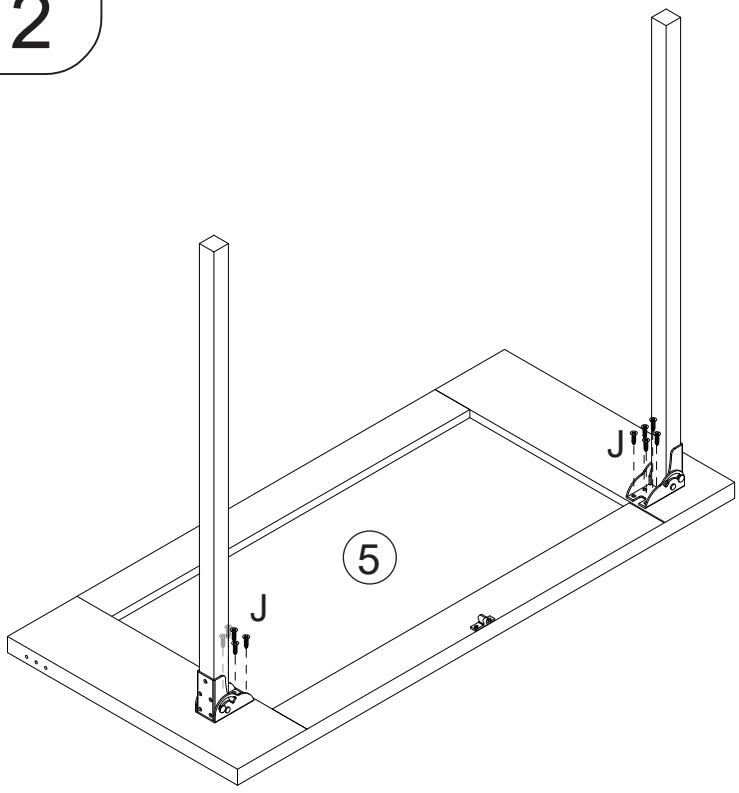

Press the switch to open or close the folding legs

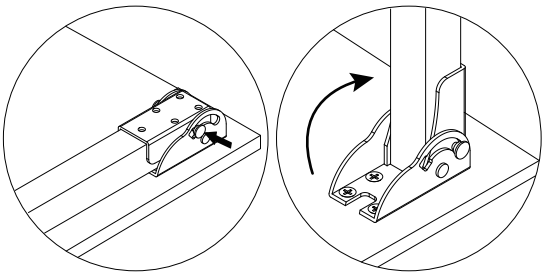

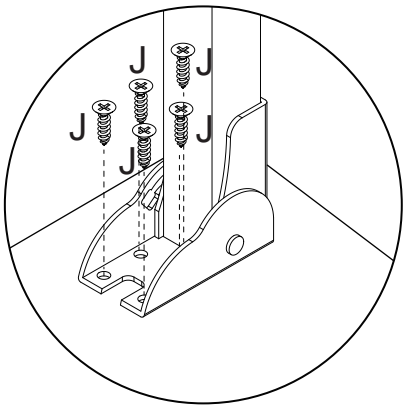

J	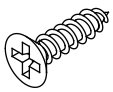	x10

Assembly

13

Place the countersunk holes on the outer side, and then tighten the screws.

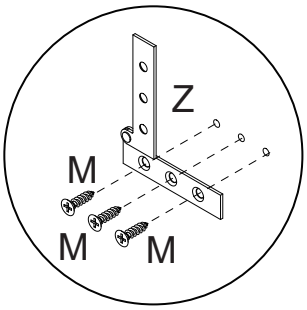

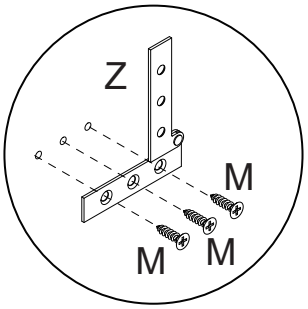

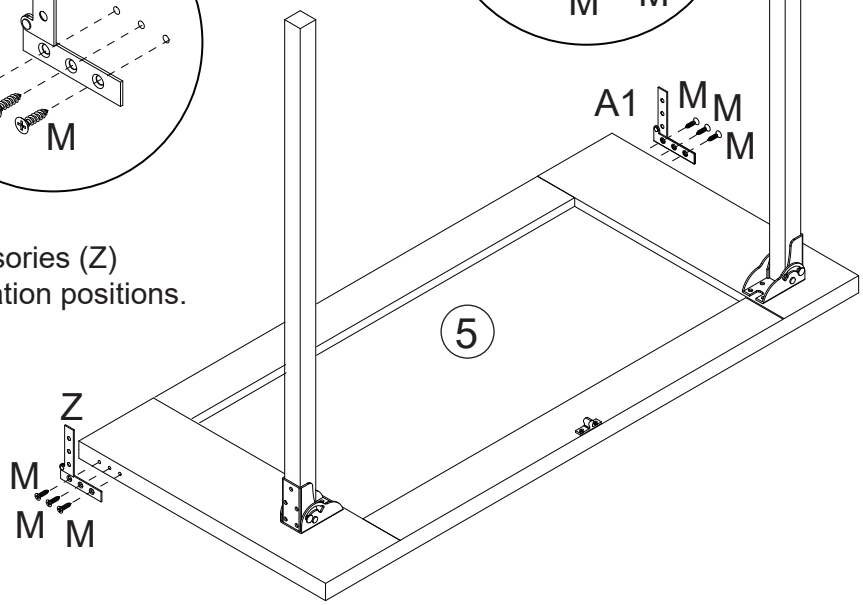

The rotation directions of the accessories (Z) are d fferent,and so are their installation positions.

M	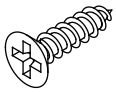	x6
Z	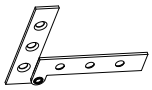	x2

14

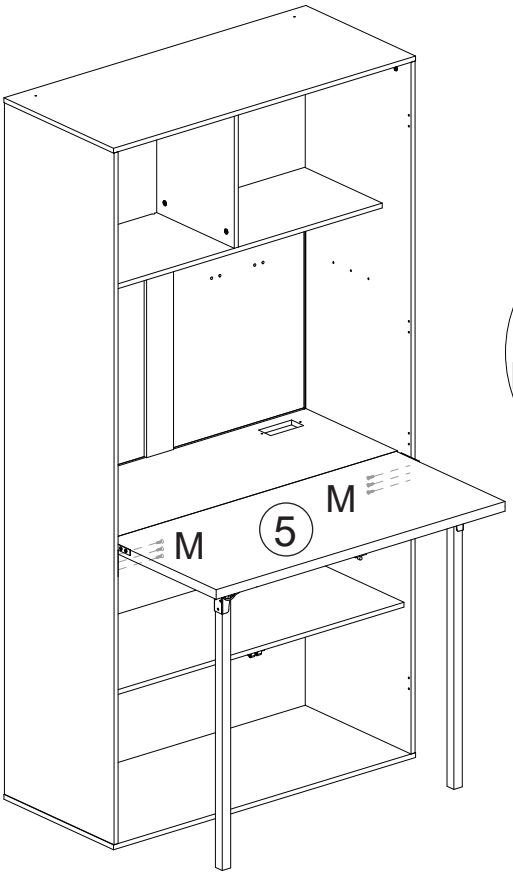

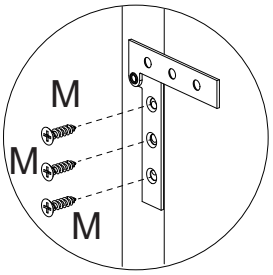

M	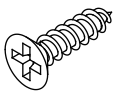	x6

Assembly

15

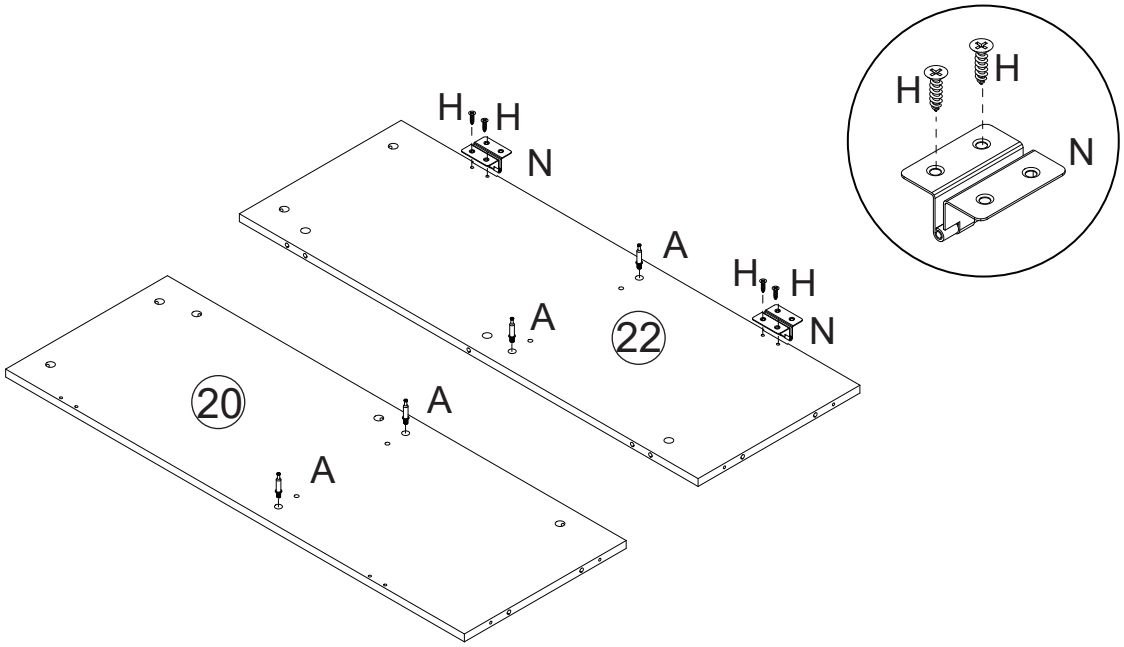

A 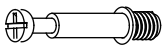 x4	H 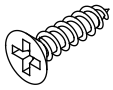 x4	N 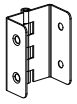 x2

16

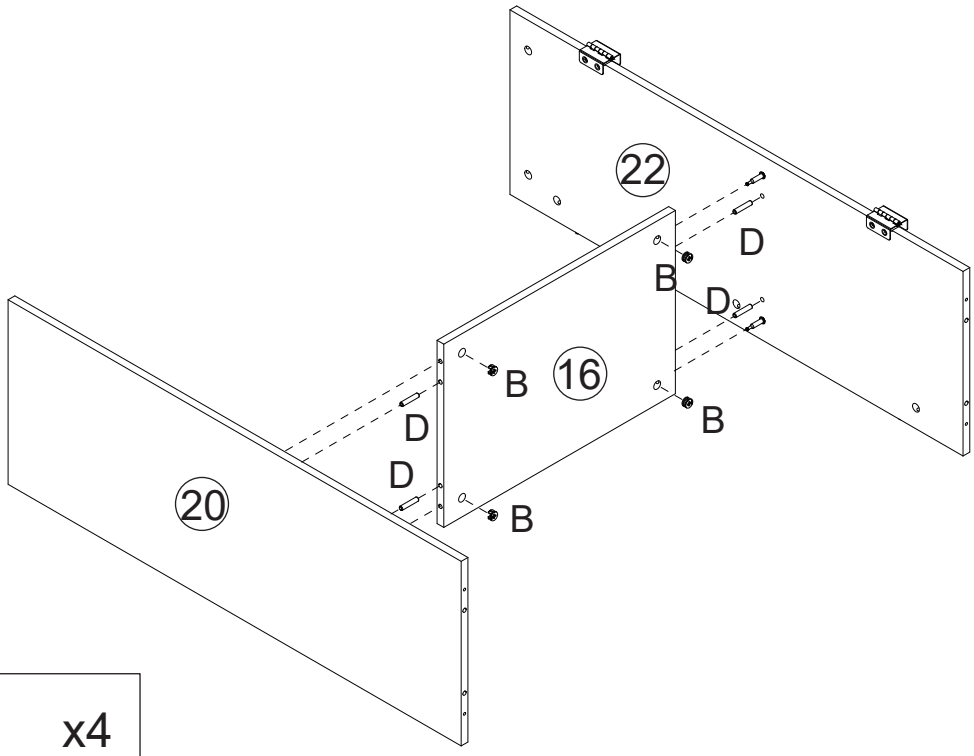

B  x4	
D  x4	

Assembly

17

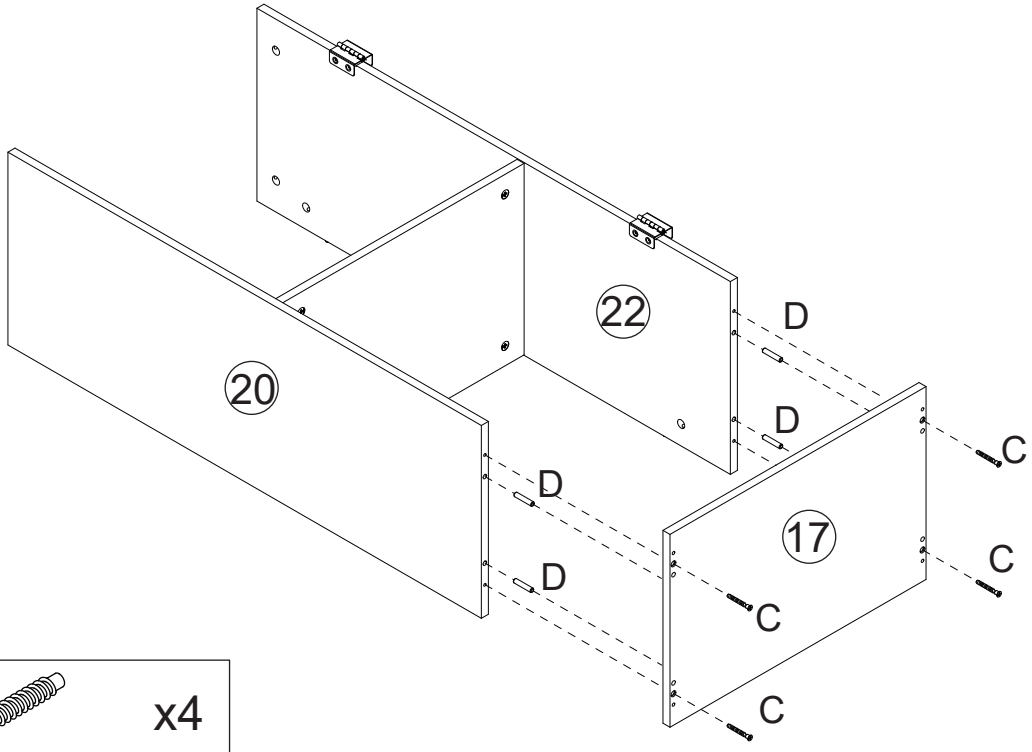

C	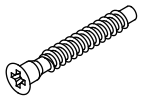	x4
D		x4

18

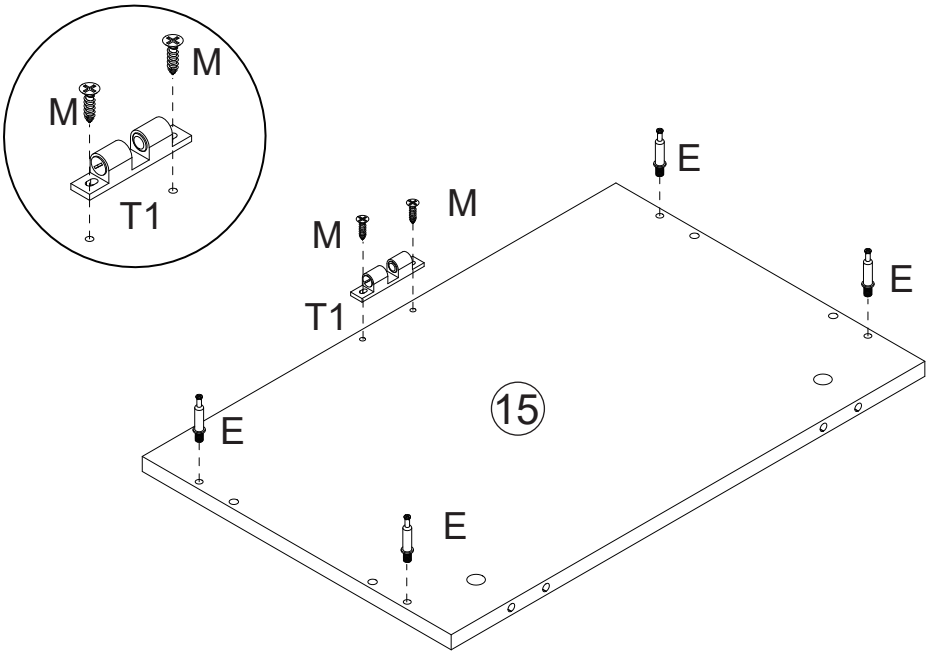

E		x4	M	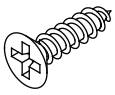	x2	T1	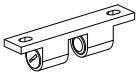	x1

Assembly

19

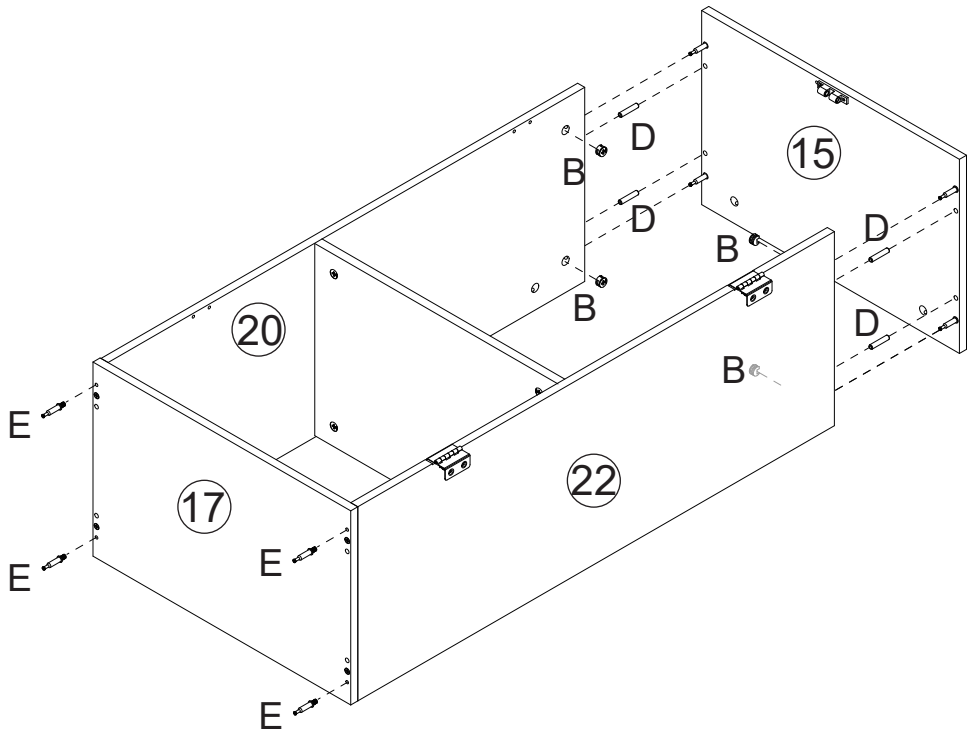

B		x4	D	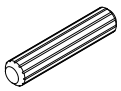	x4

E		x4

20

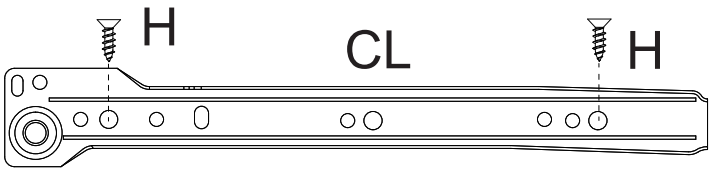

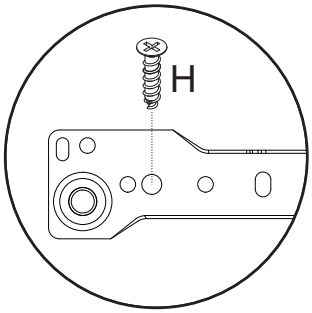

Note: Install CL
on the Right side.

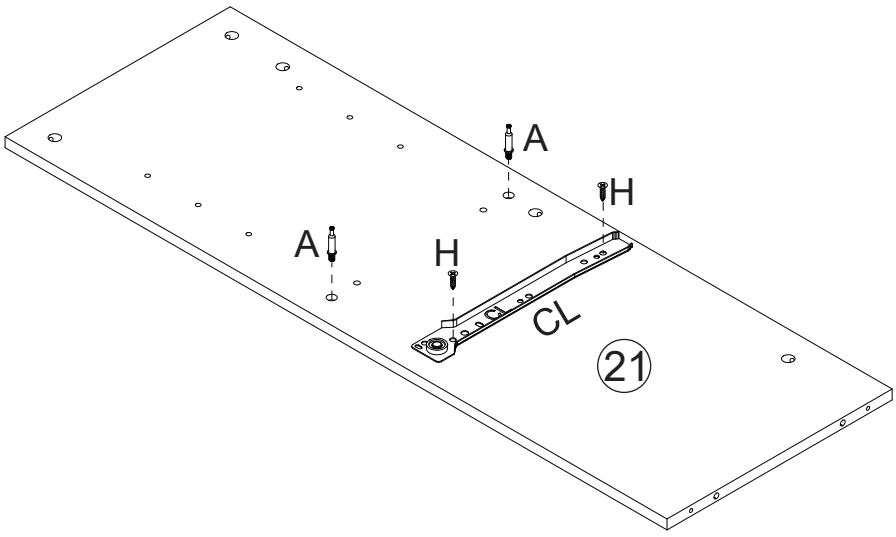

A	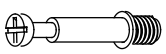	x2	H	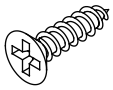	x2

L	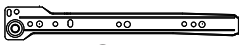 CL	x1

Assembly

21

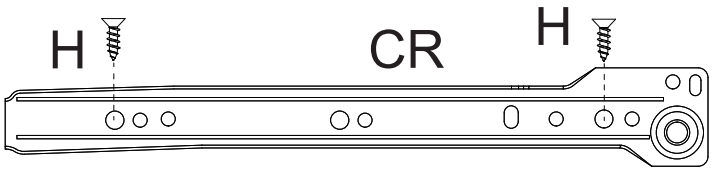

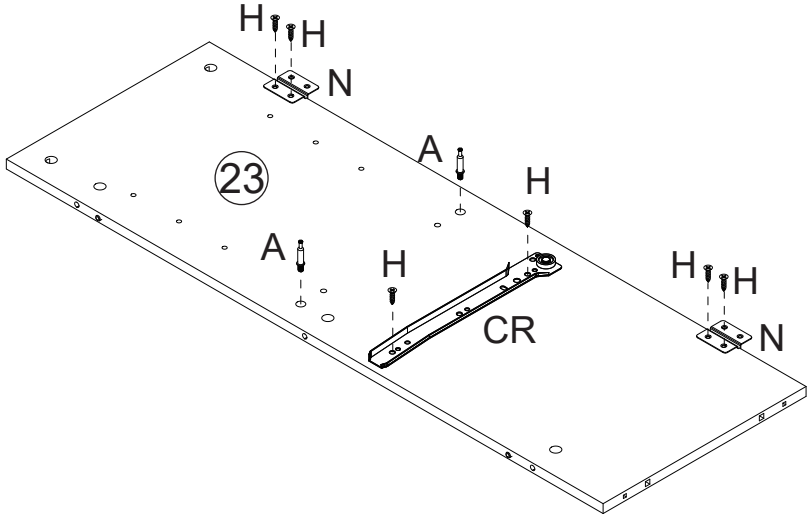

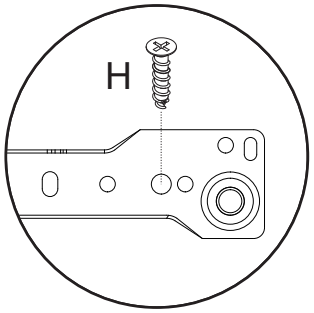

Note: Install CR on the Right side.

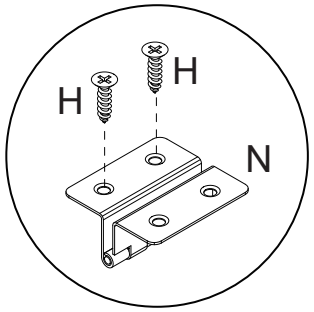

A	x2	H	x6
N	x2	L CR	x1

22

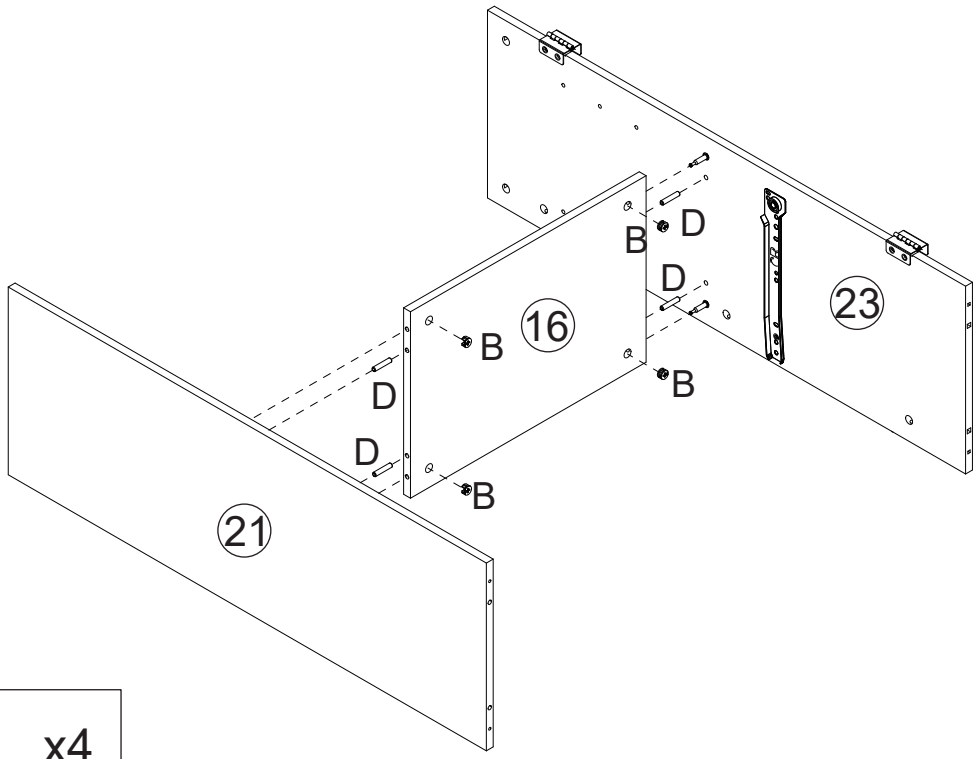

B	x4
D	x4

Assembly

23

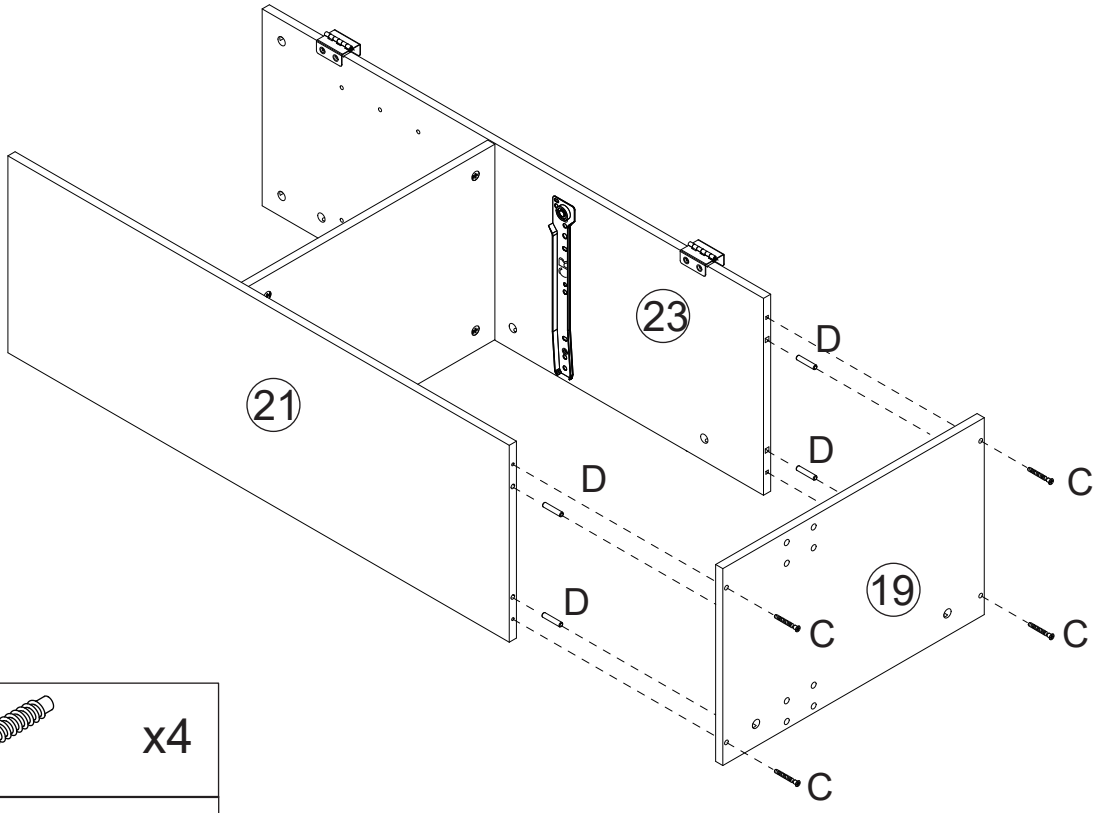

C	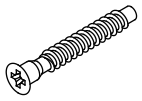	x4
D		x4

24

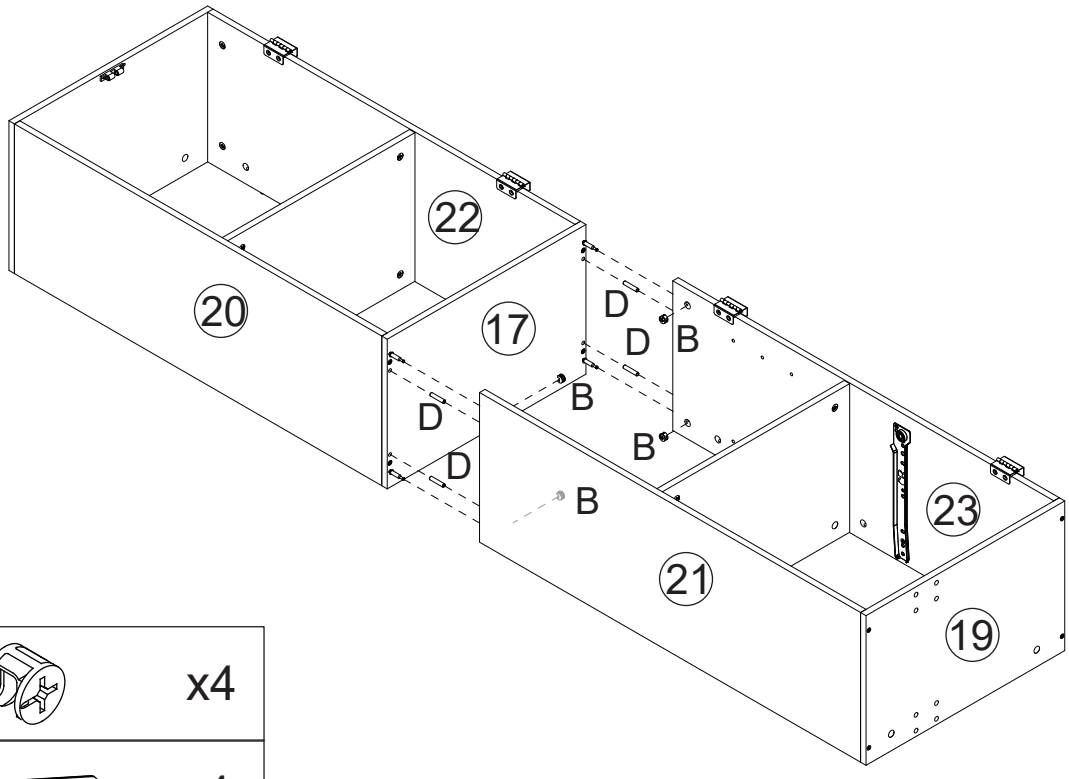

B		x4
D		x4

Assembly

25

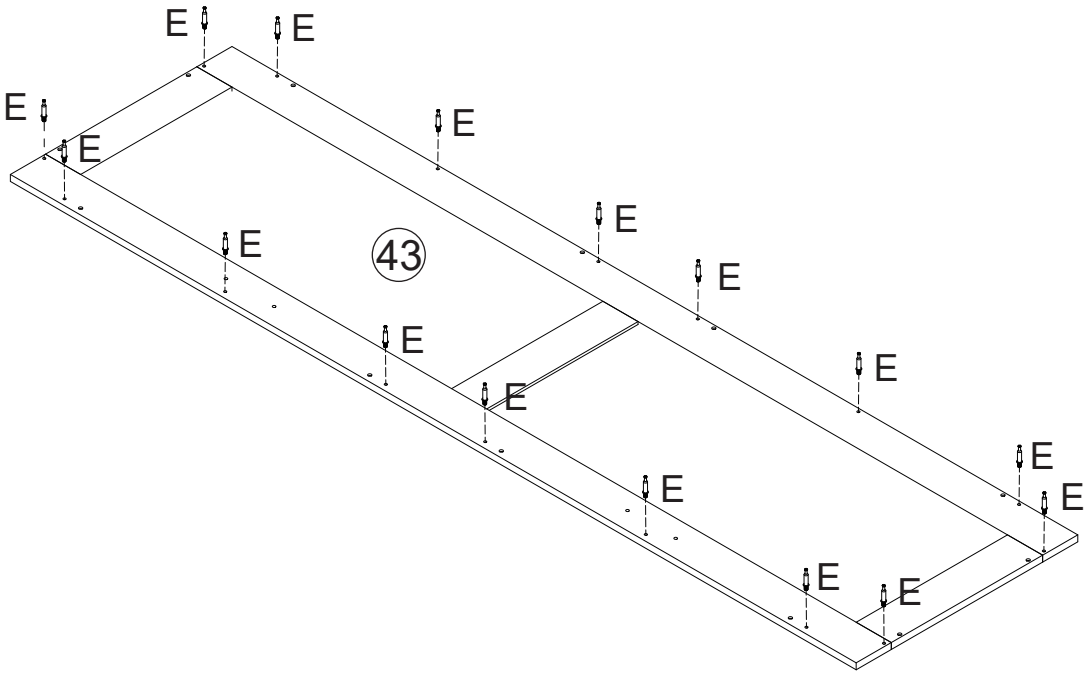

E		x16

26

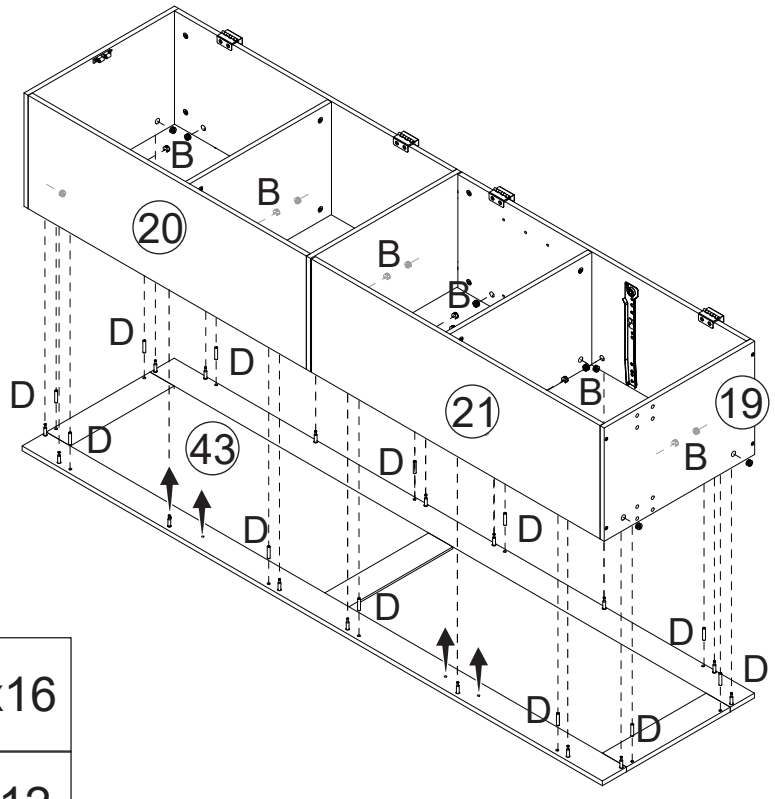

B		x16
D		x12

Assembly

27

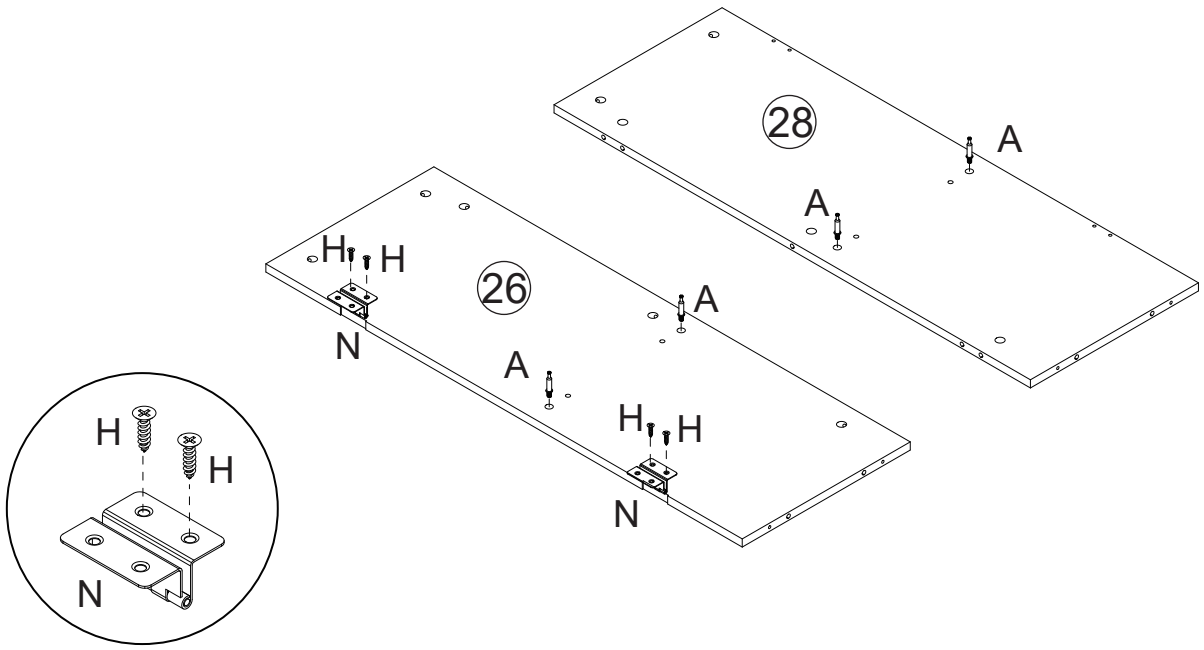

A	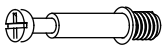	x4	H	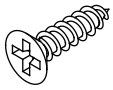	x4
N	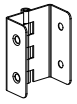	x2			

28

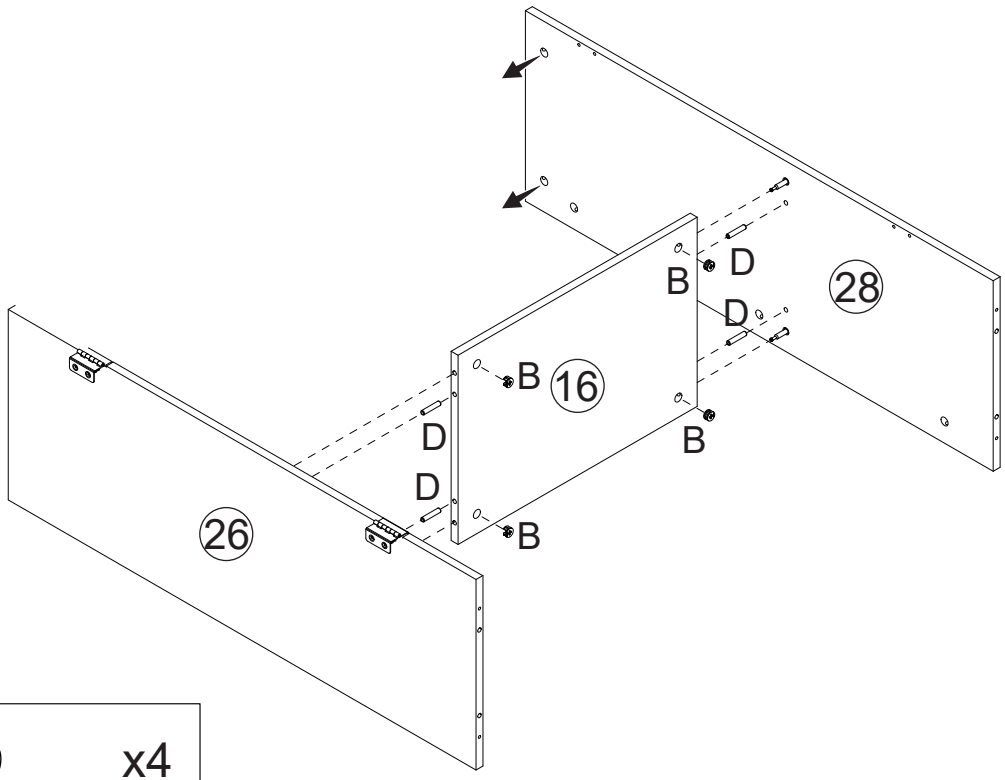

B		x4
D		x4

Assembly

29

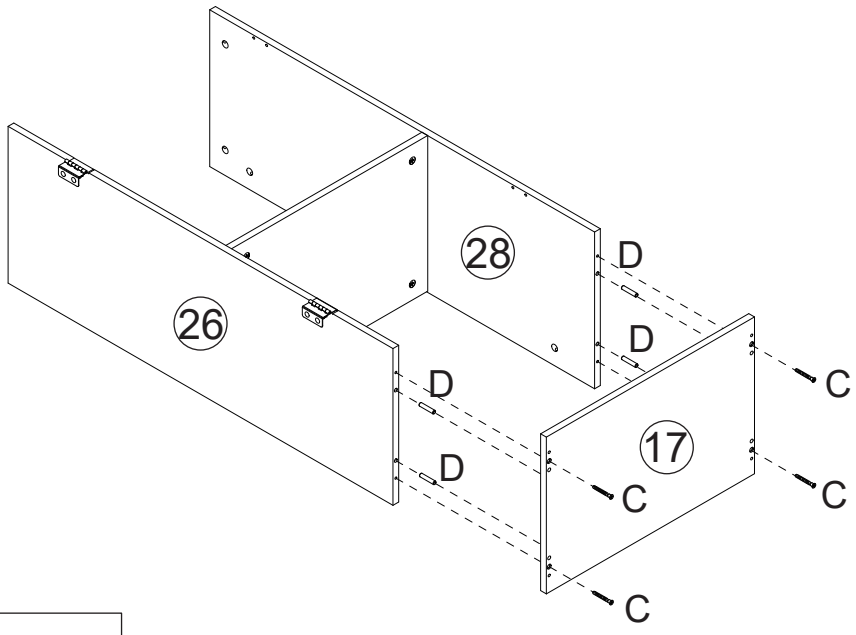

C	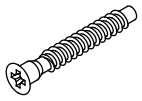	x4
D		x4

30

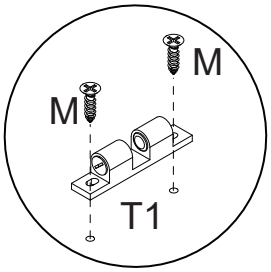

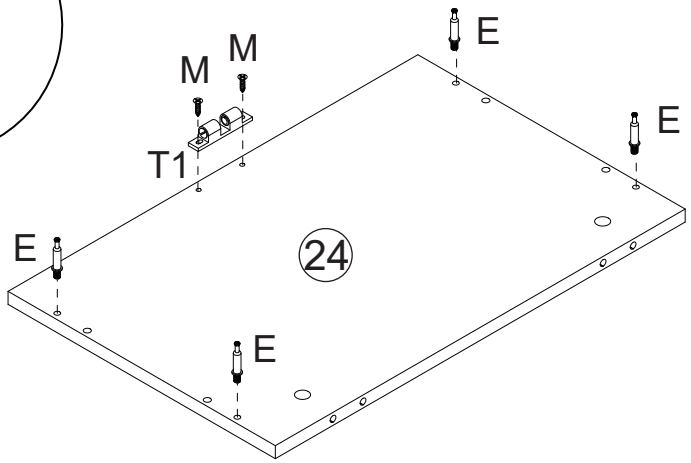

E		x4	M	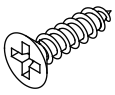	x2	T1	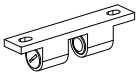	x1

Assembly

31

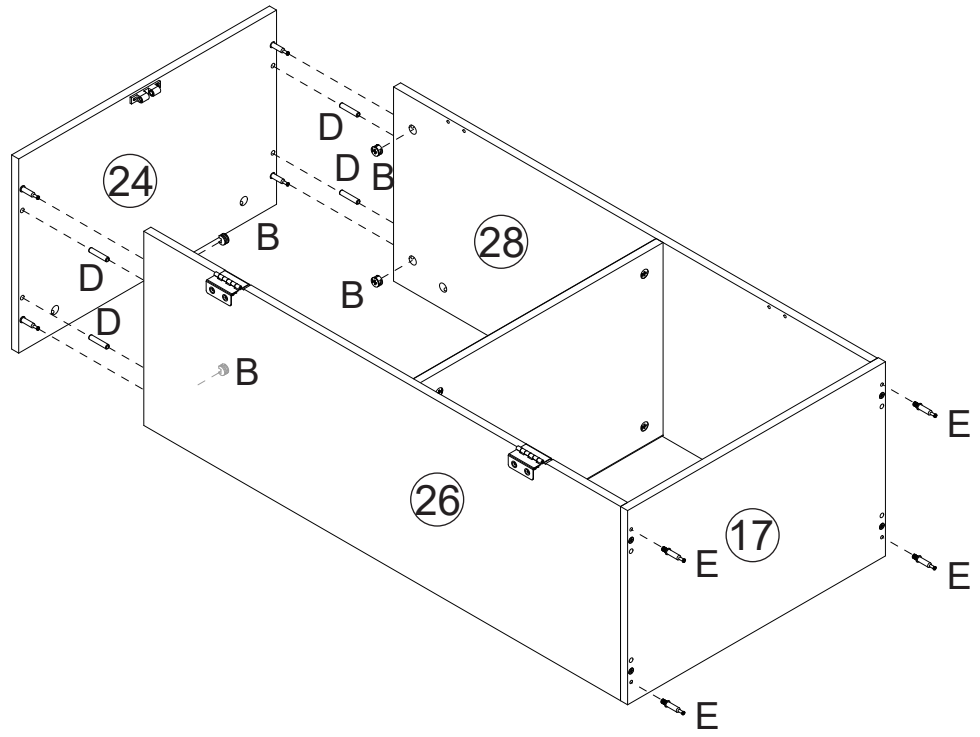

B	x4	D	x4	E	x4

32

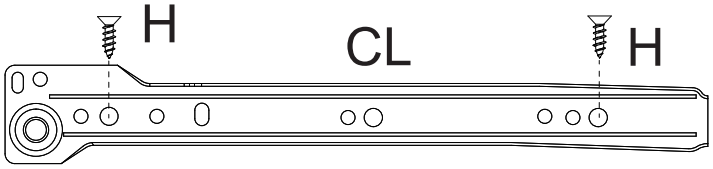

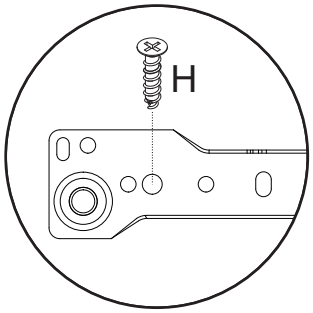

Note: Install CL
on the Right side.

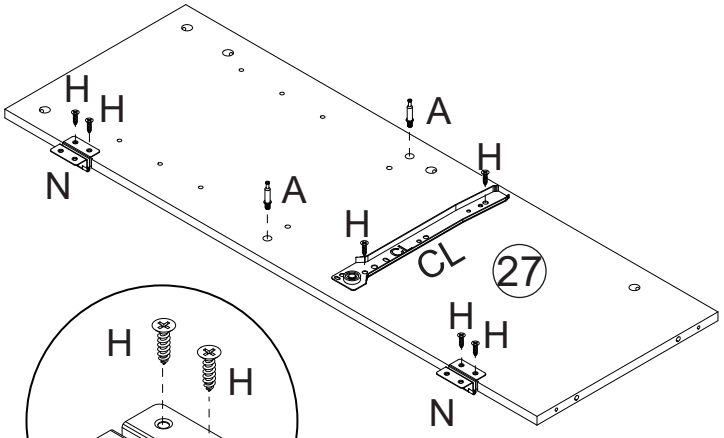

A	x2				
H	x6	N	x2	L CL	x1

Assembly

33

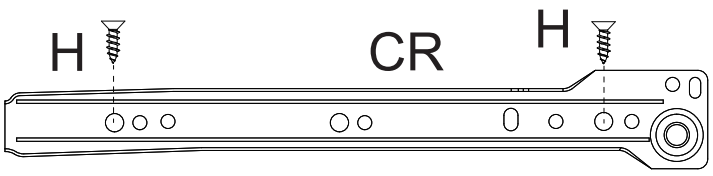

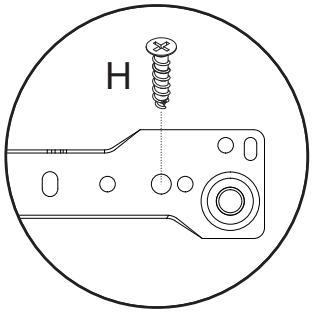

Note: Install CR on the Right side.

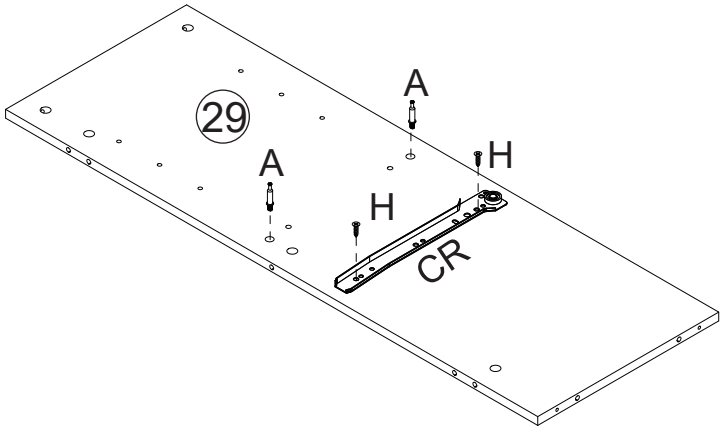

A	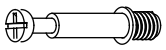	x2	H	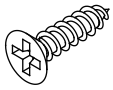	x2

L	 CR	x1

34

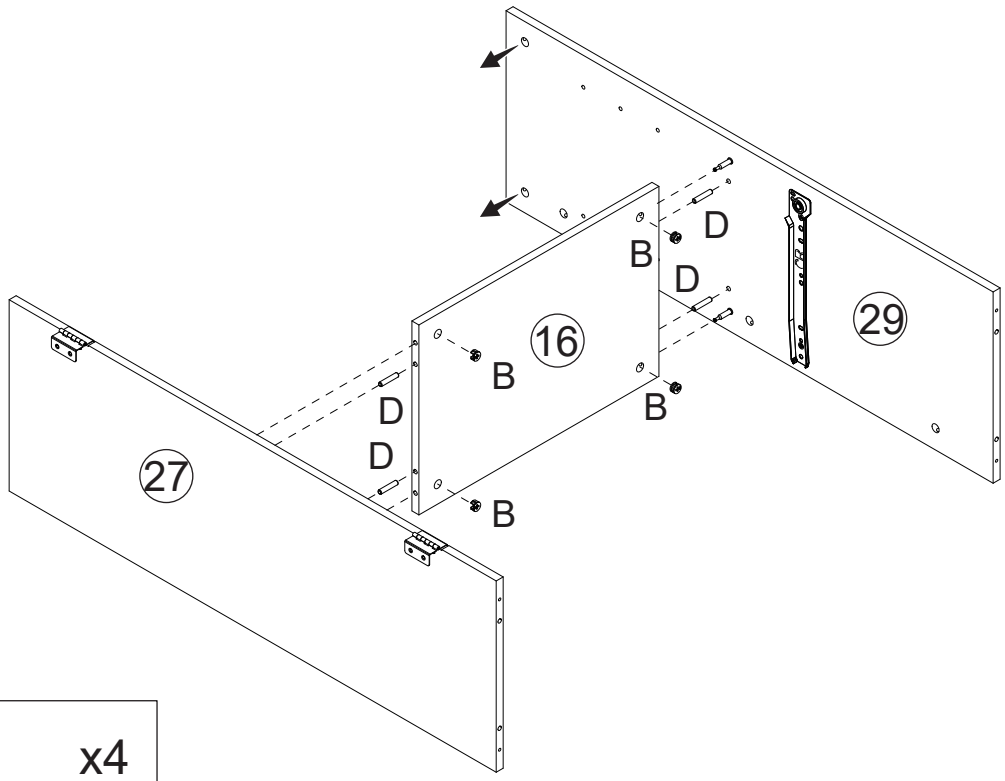

B		x4
D		x4

Assembly

35

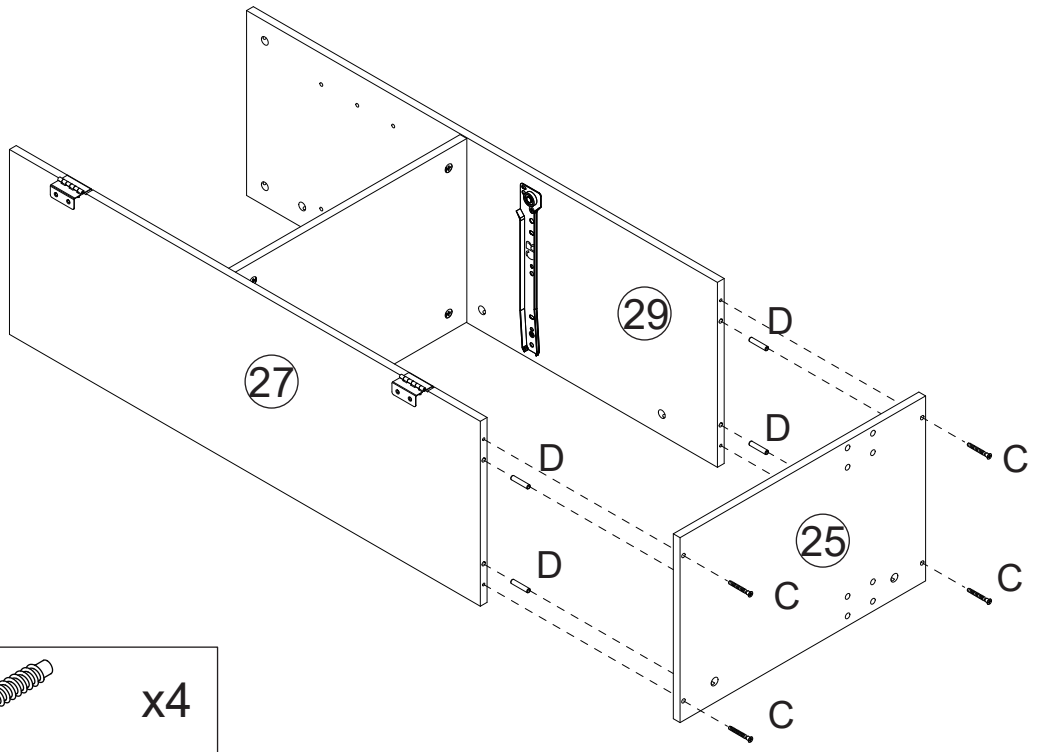

C	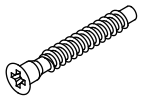	x4
D		x4

36

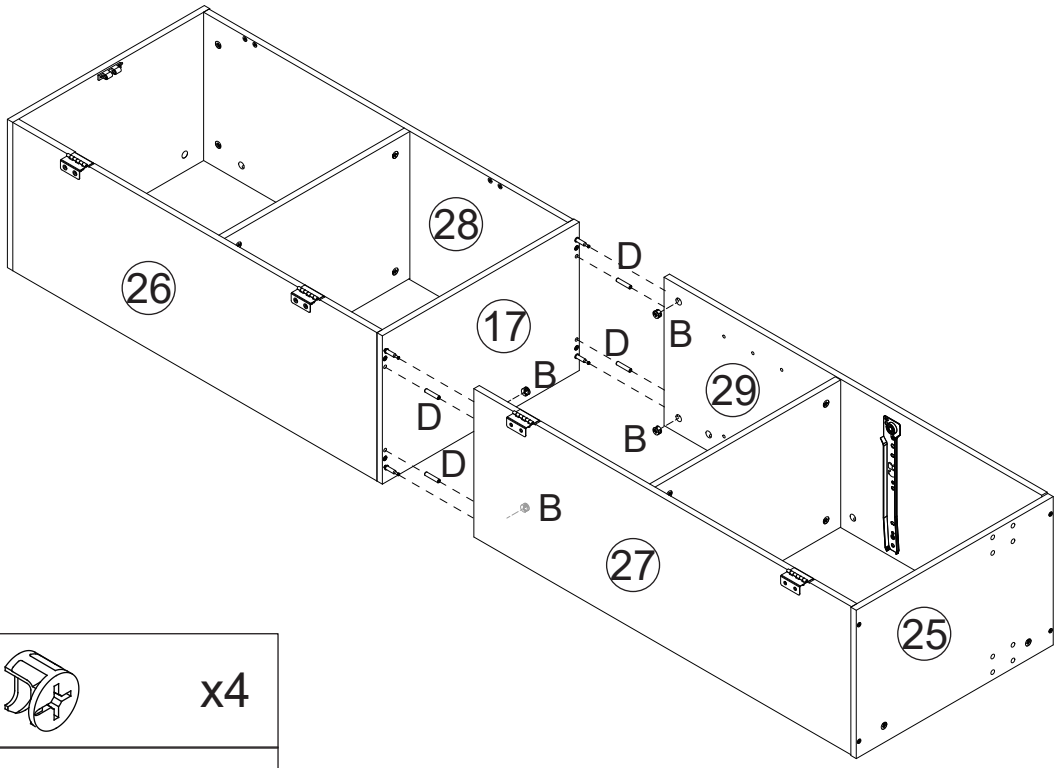

B		x4
D		x4

Assembly

37

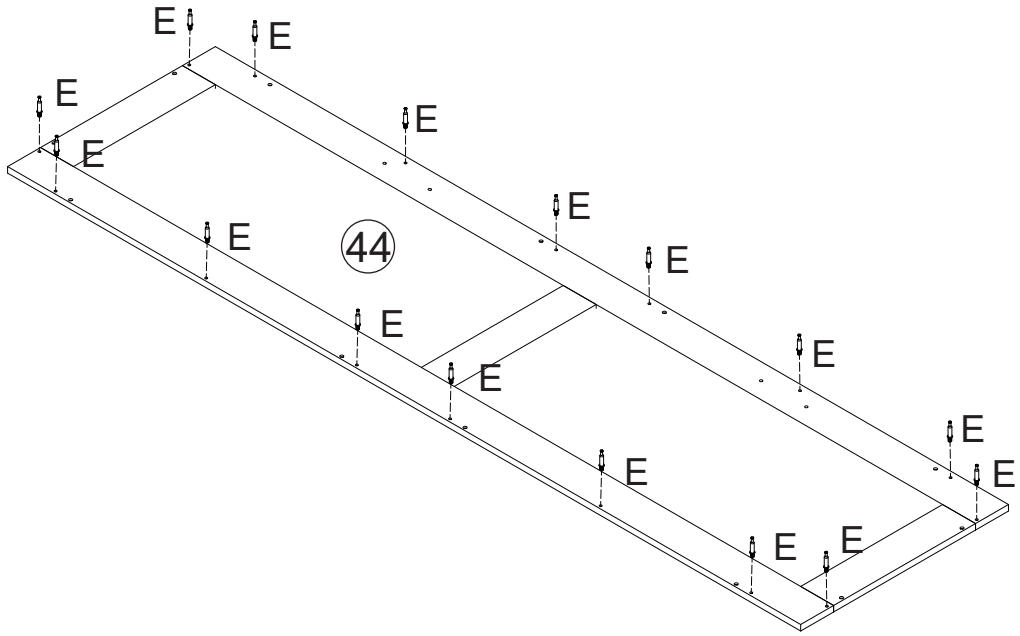

E  x16

38

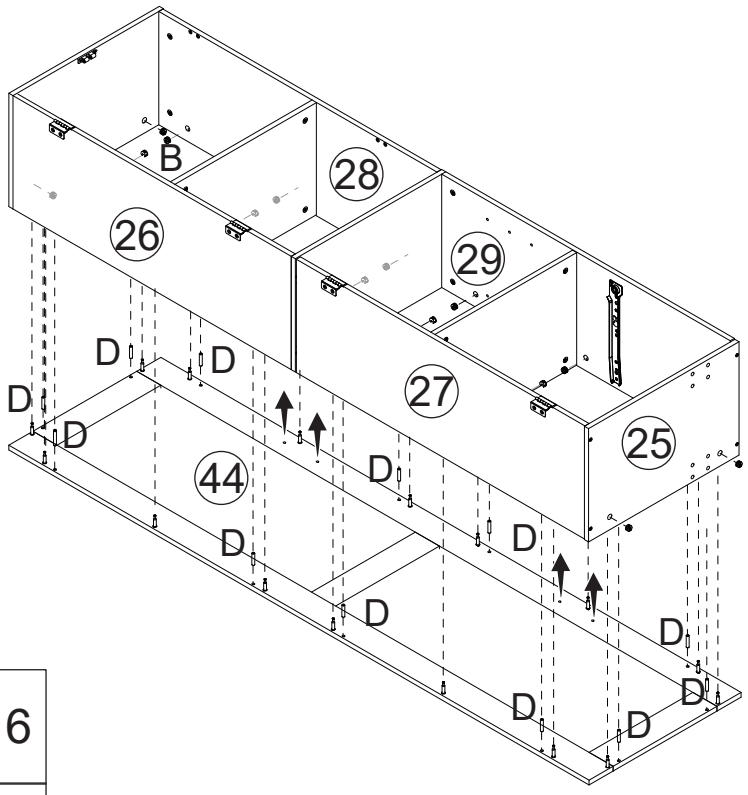

B  x16

D  x12

Assembly

39

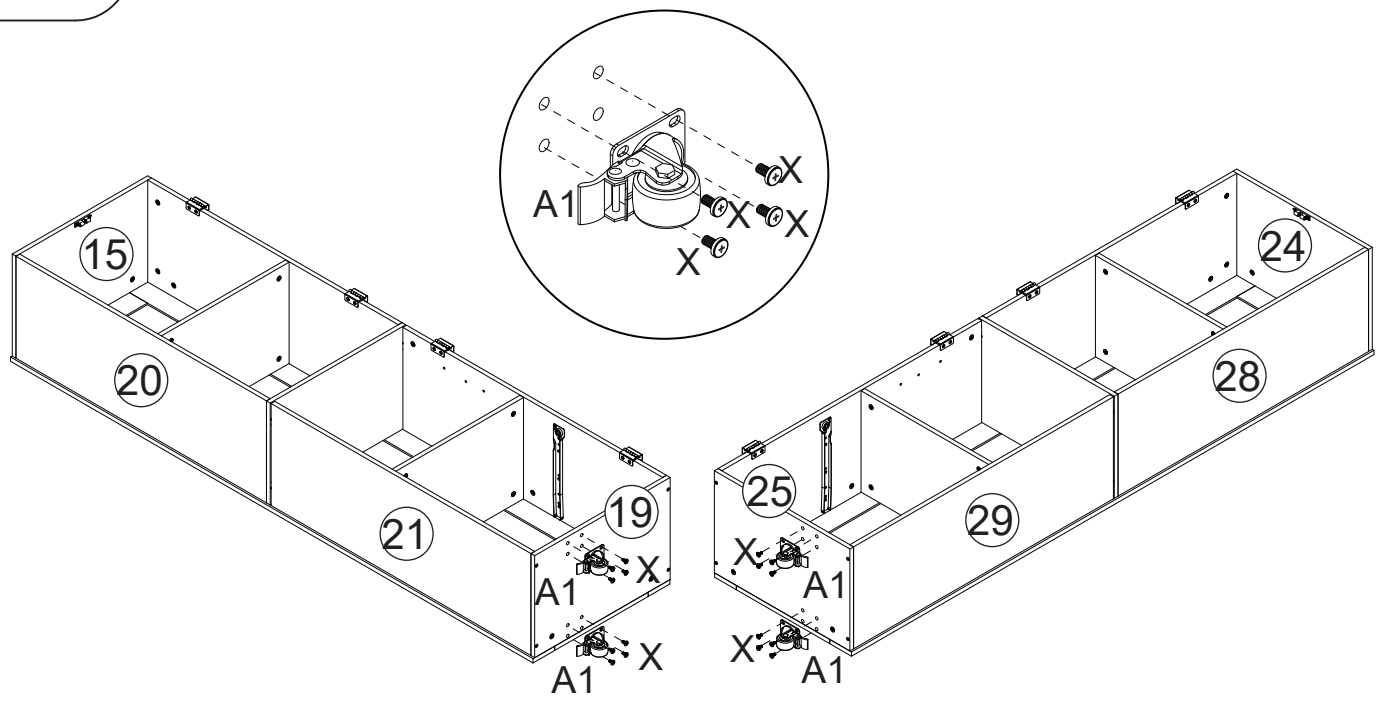

X	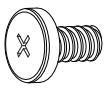	x16	A1	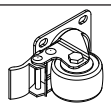	x4

40

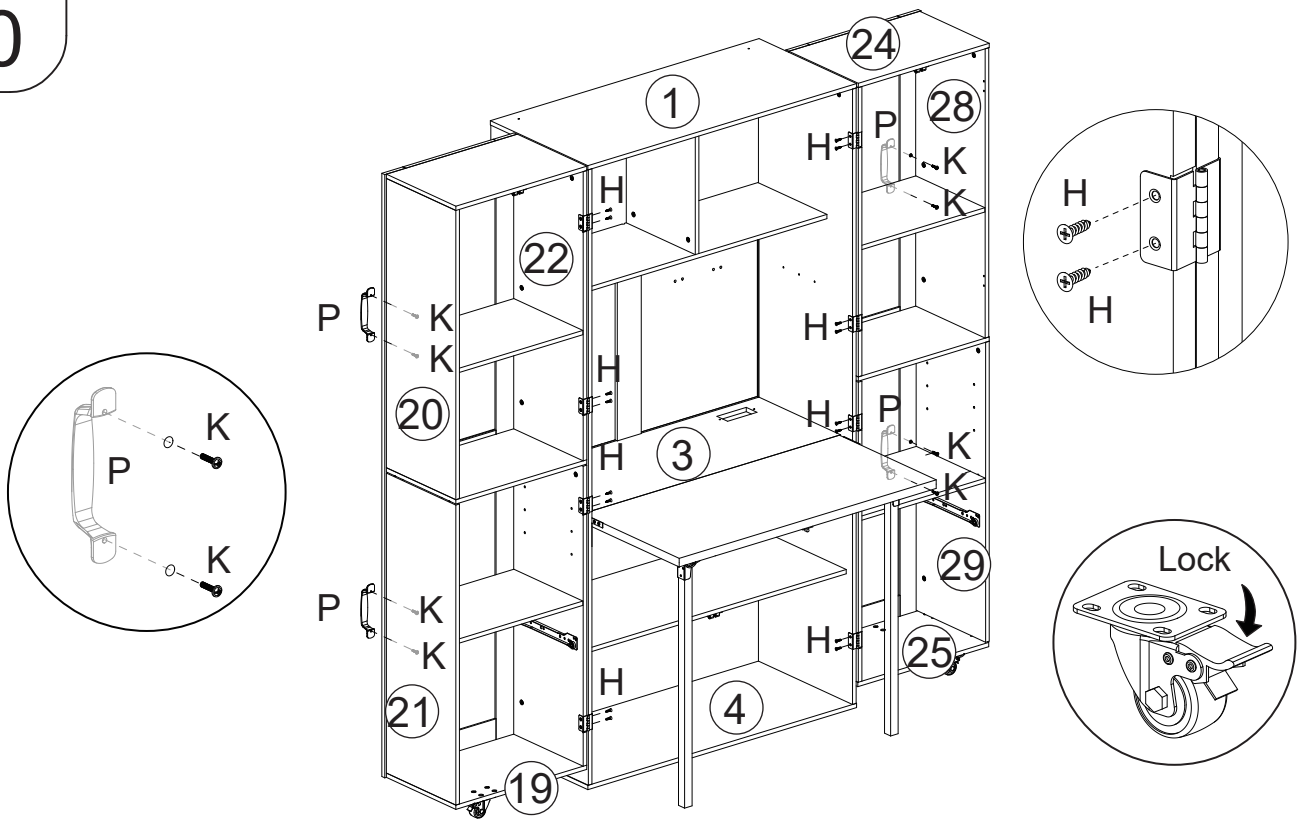

H	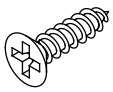	x16	K	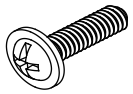	x8	P	 x4

Assembly

41

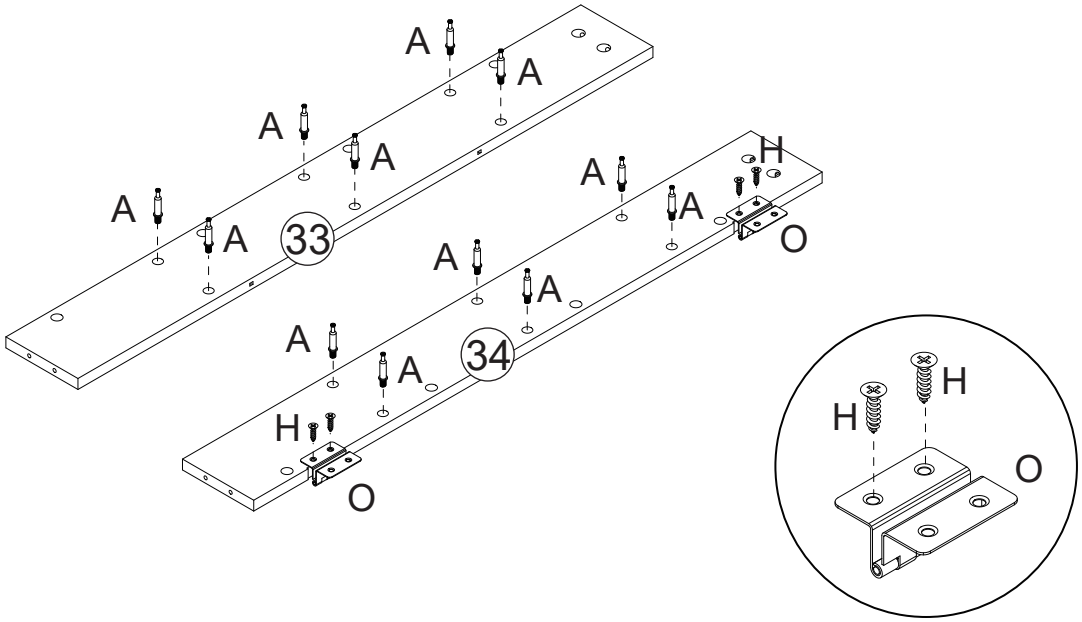

A	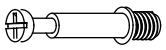	x12	H	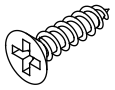	x4

O	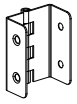	x2

42

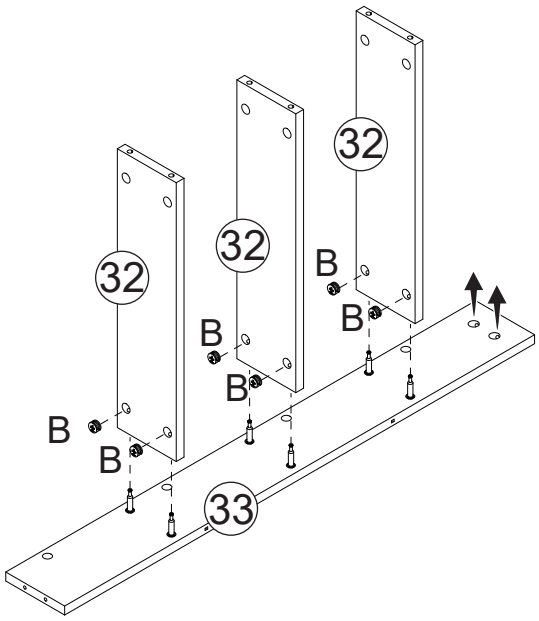

B		x6

43

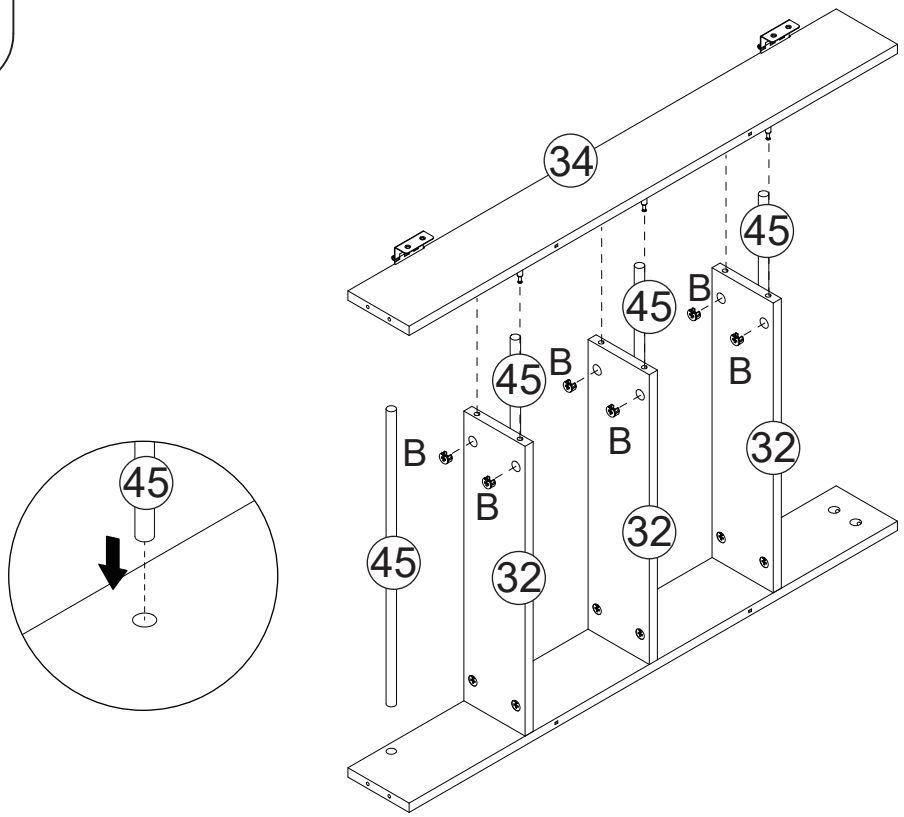

B  x6

44

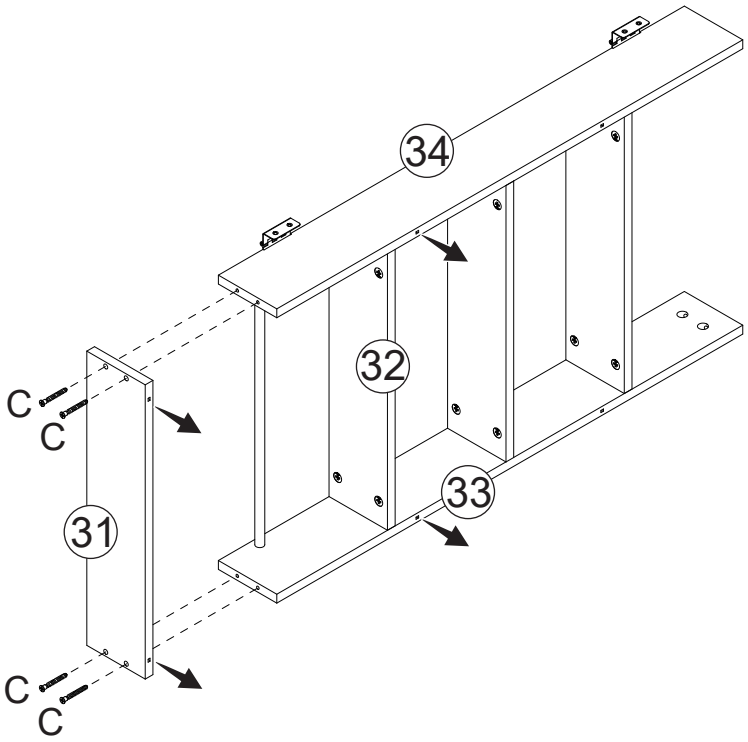

C 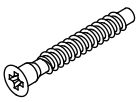 x4

45

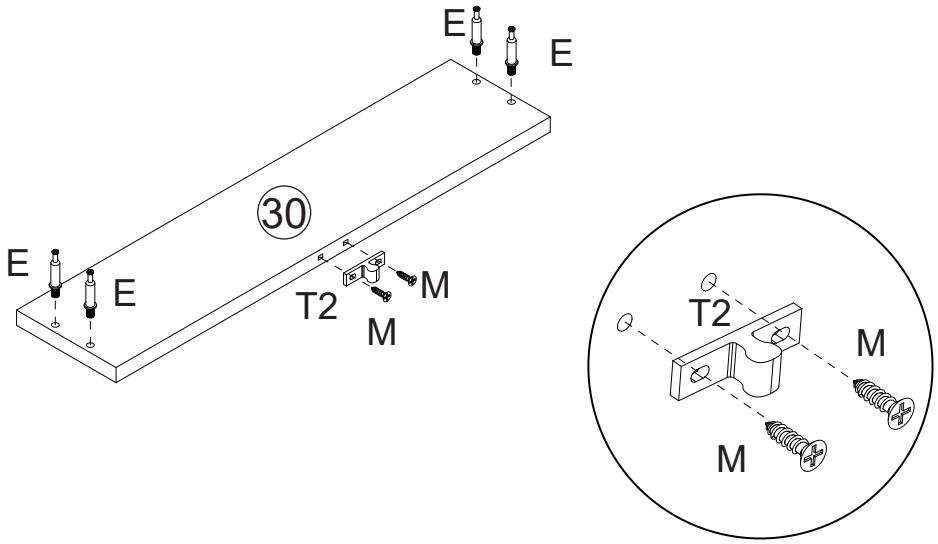

E		x4	M	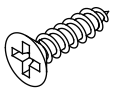	x2
T2	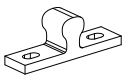	x1			

46

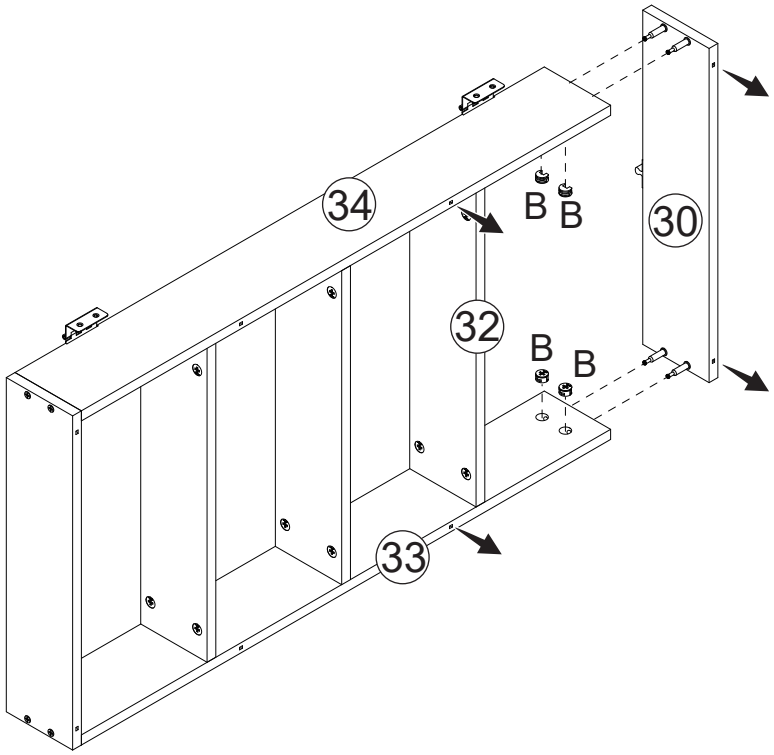

B		x4

Assembly

47

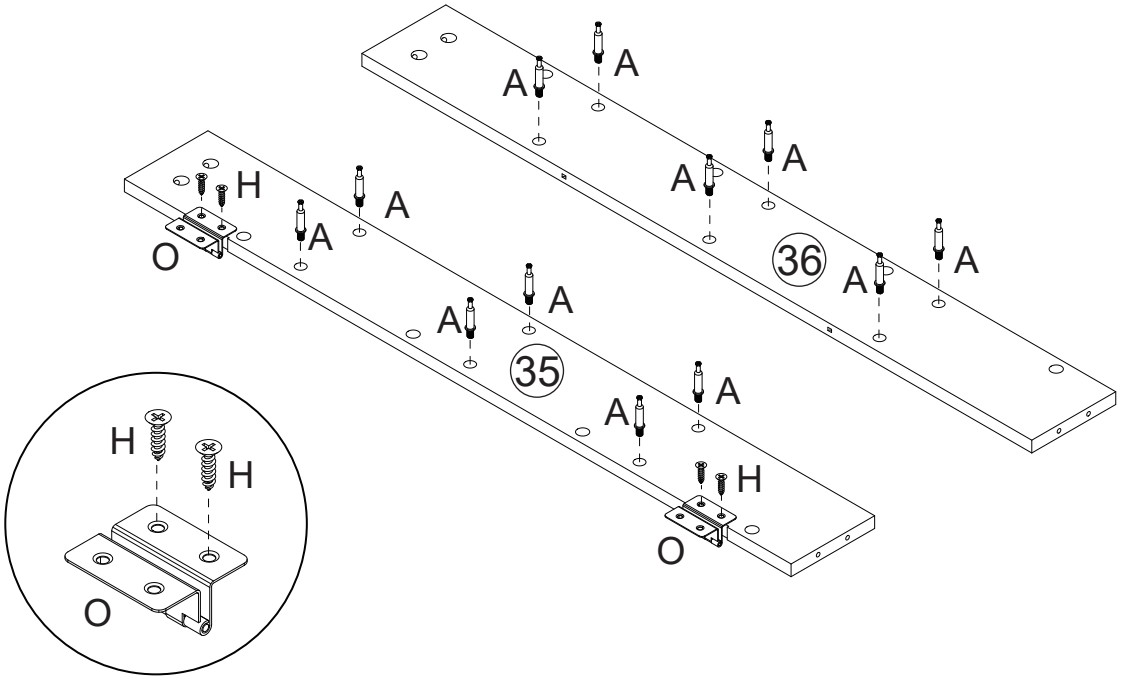

A	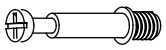	x12	H	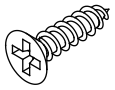	x4
O	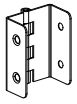	x2			

48

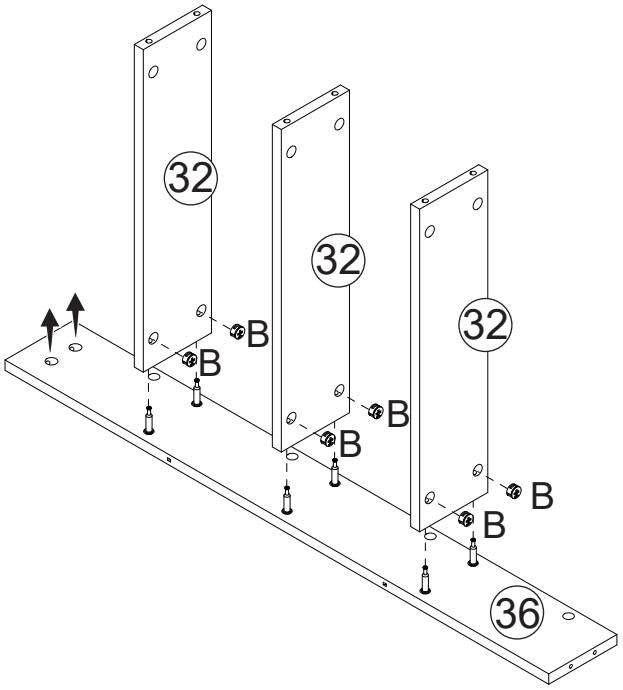

B		x6

Assembly

49

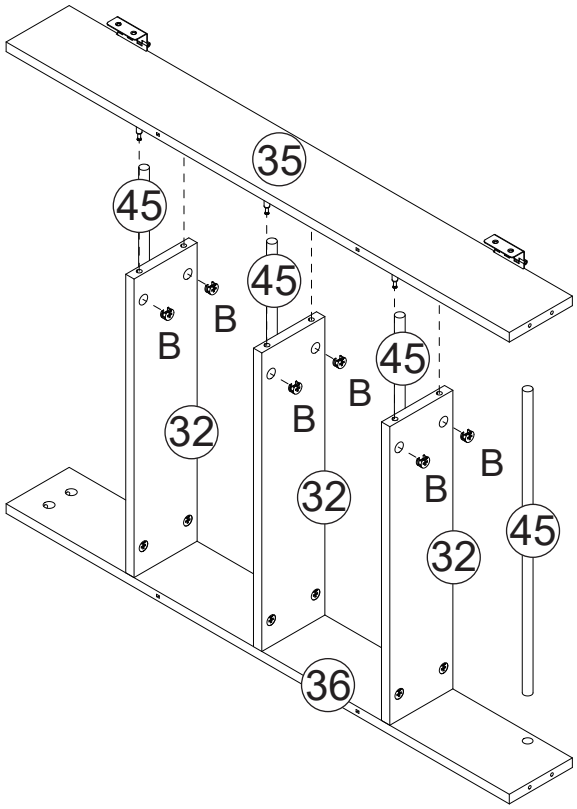

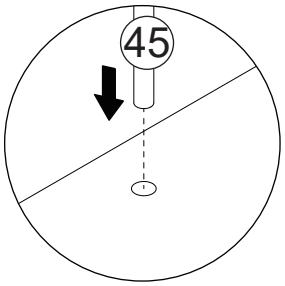

B  x6

50

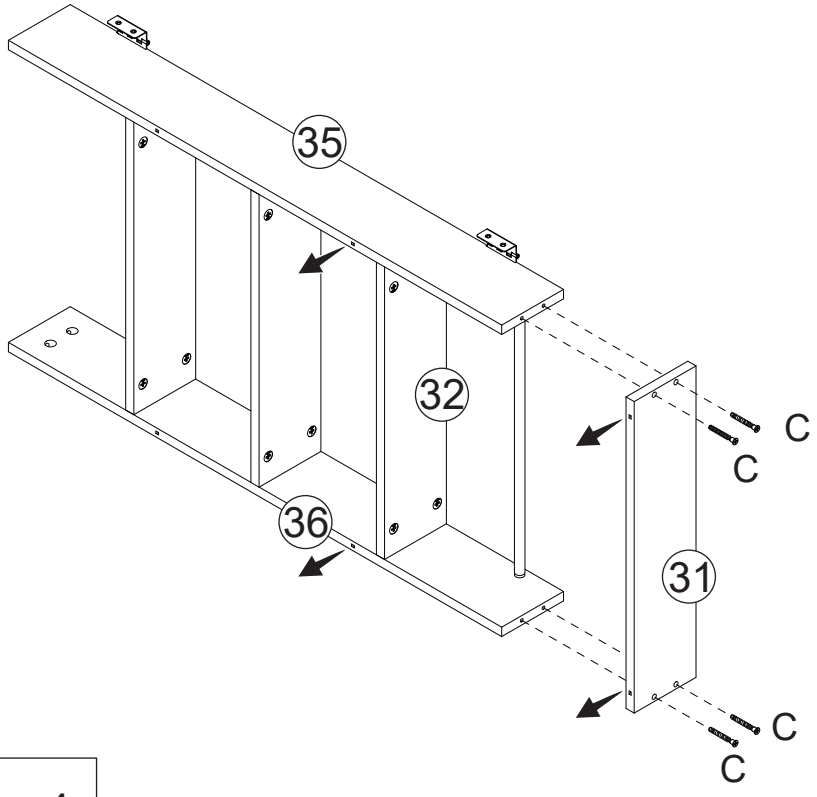

C 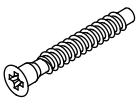 x4

51

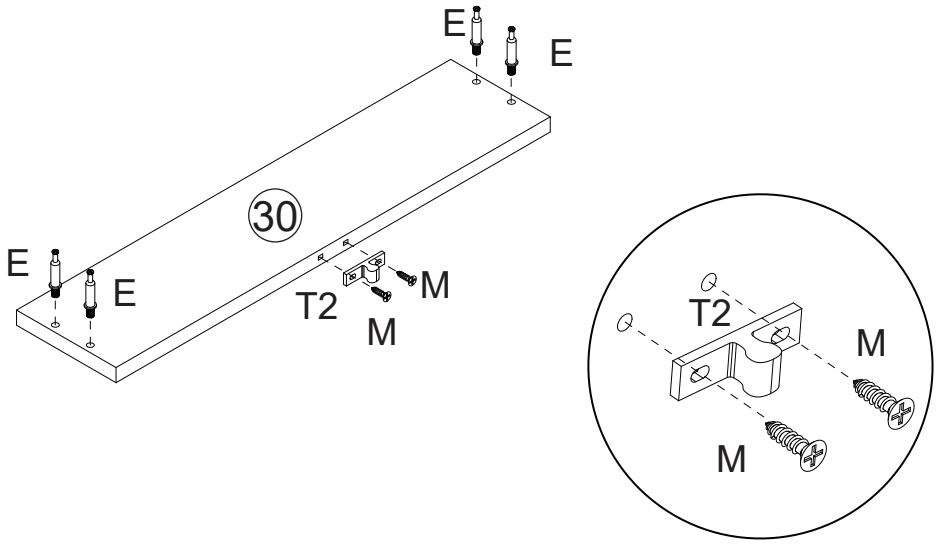

E		x4	M	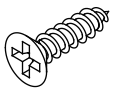	x2
T2	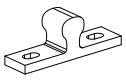	x1			

52

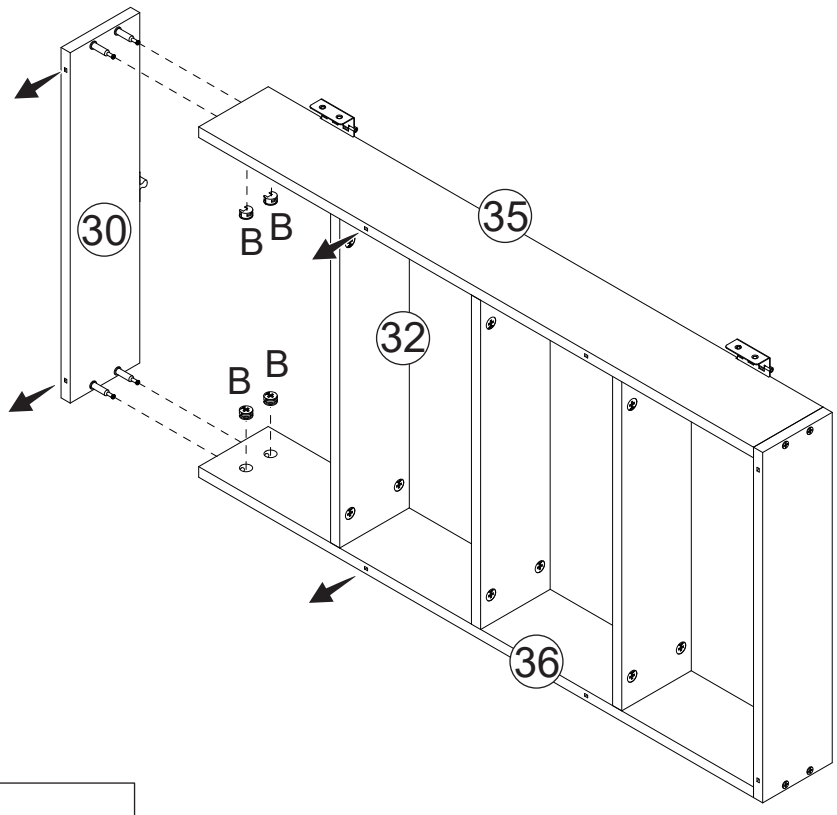

B		x4

53

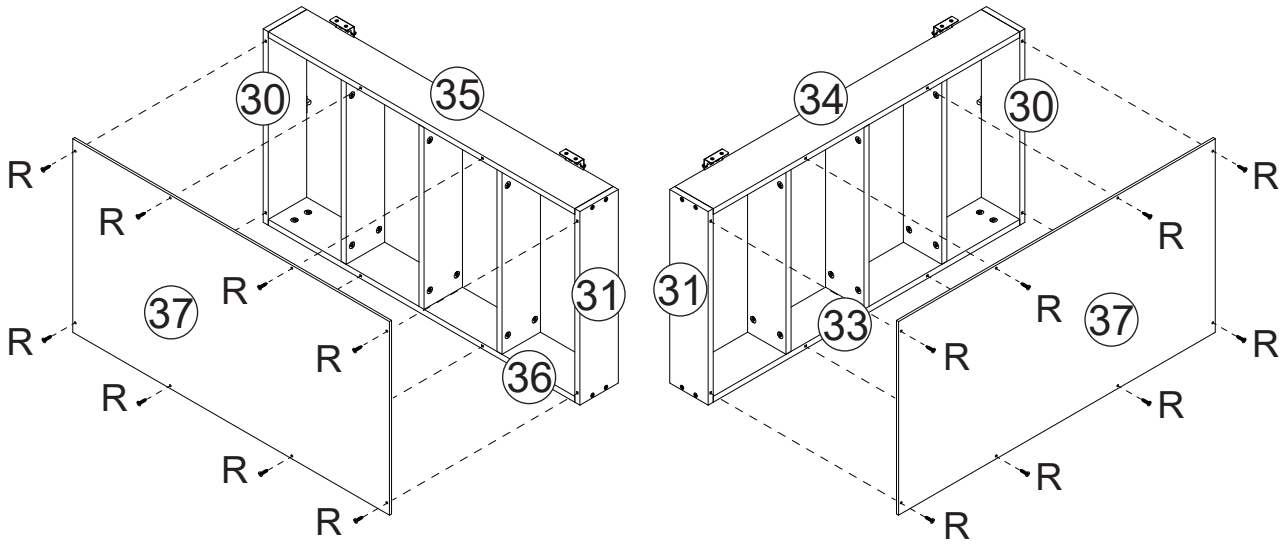

R 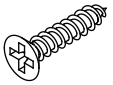 x16

54

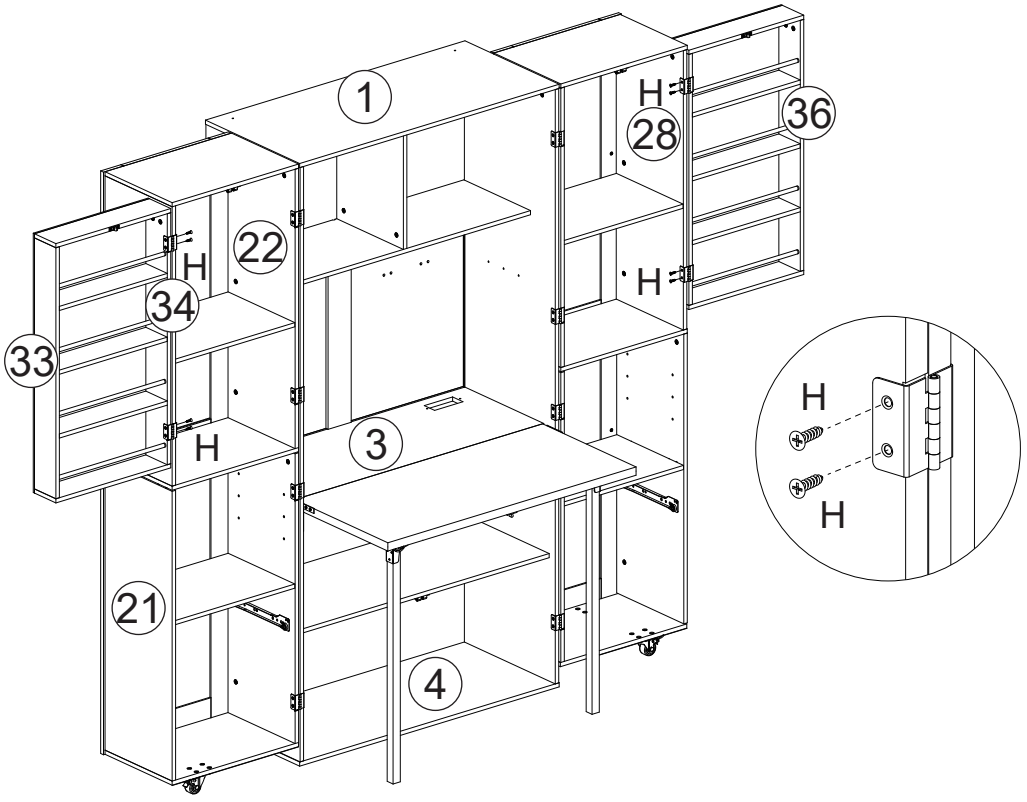

H 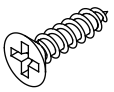 x8

Assembly

55

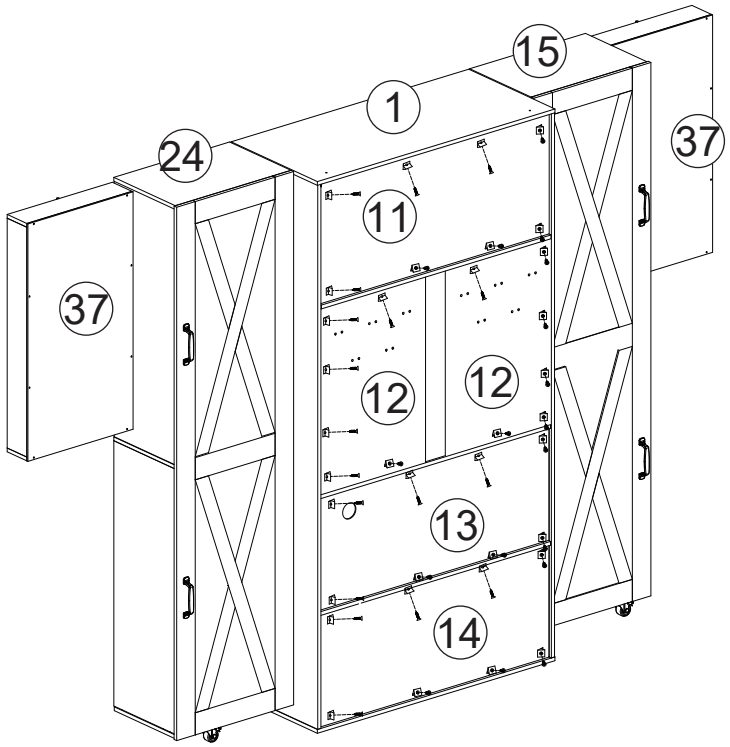

I		x36	J	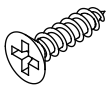	x36

56

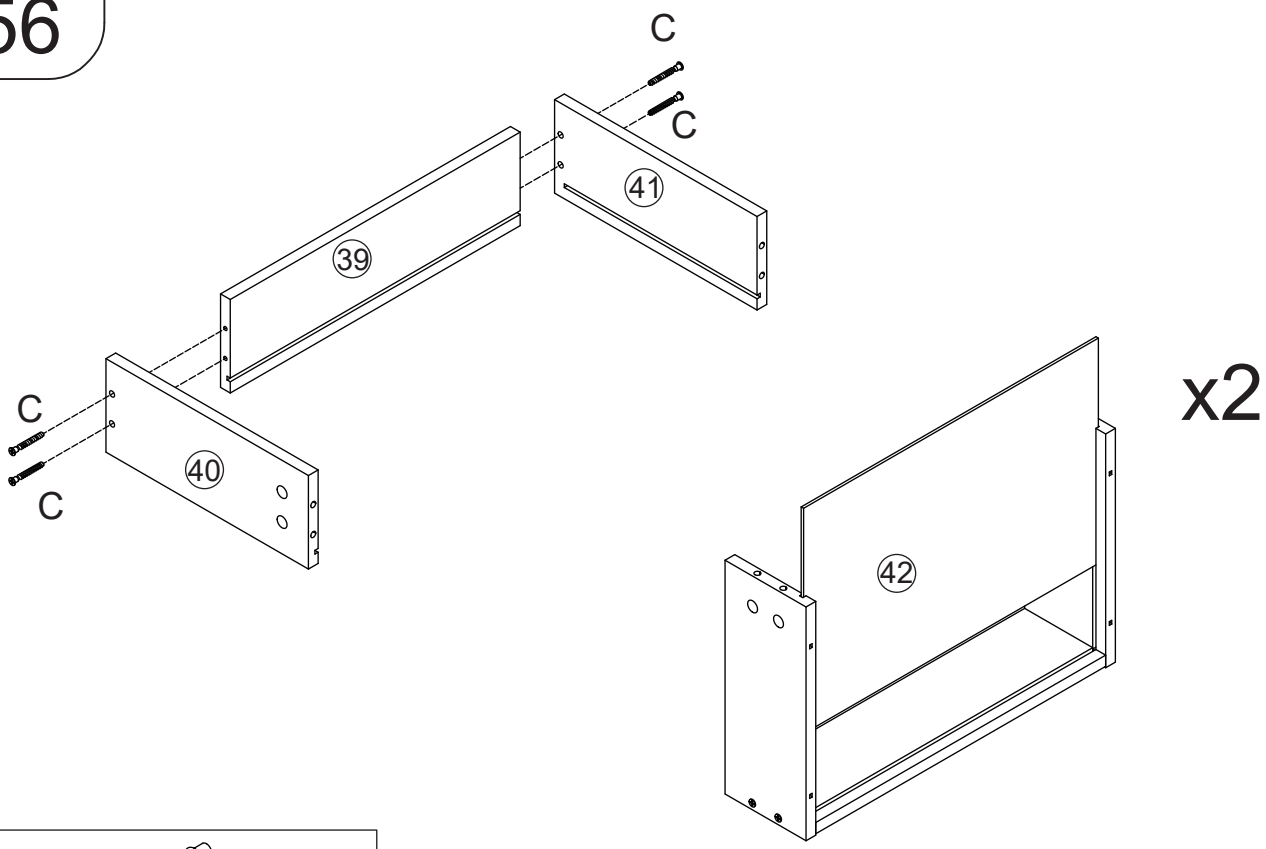

C	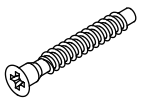	x8

Assembly

57

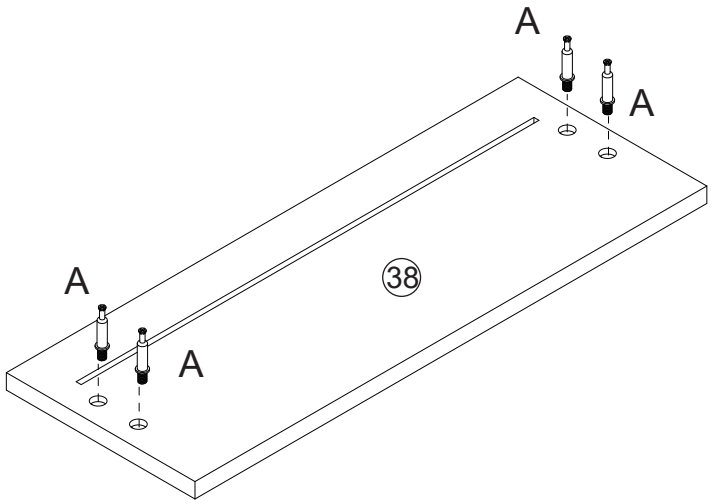

x2

A 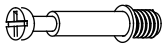 x8

58

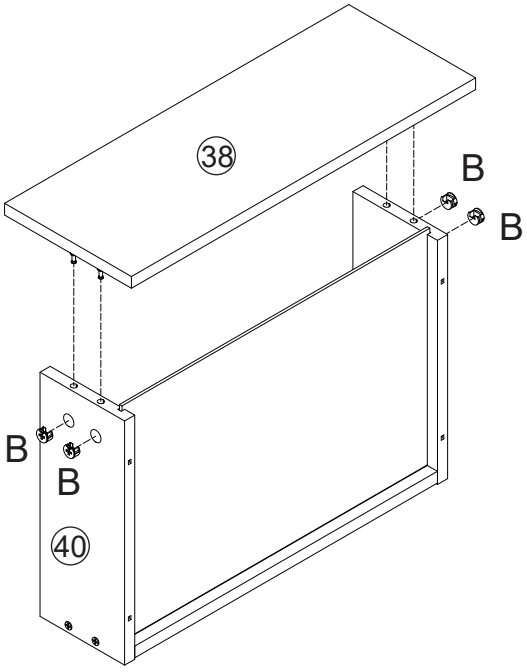

x2

B  x8

Assembly

59

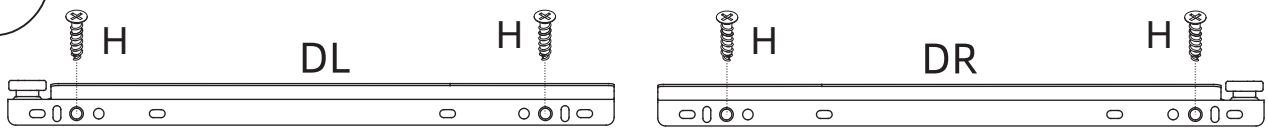

Install DL on the left side,
and DR on the right side.

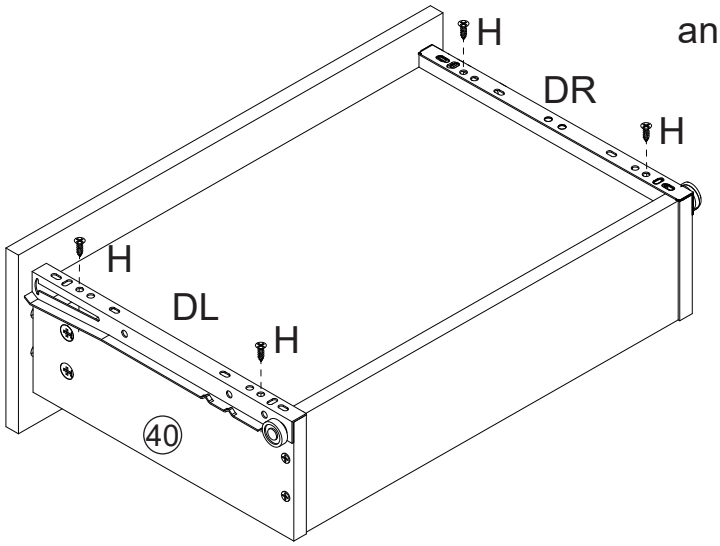

x2

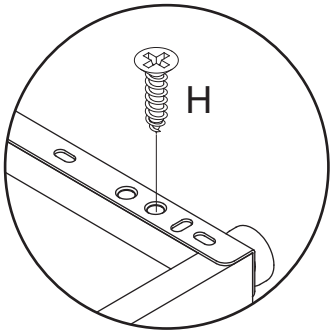

H	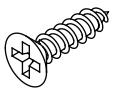	x8	L	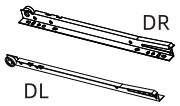	x2

60

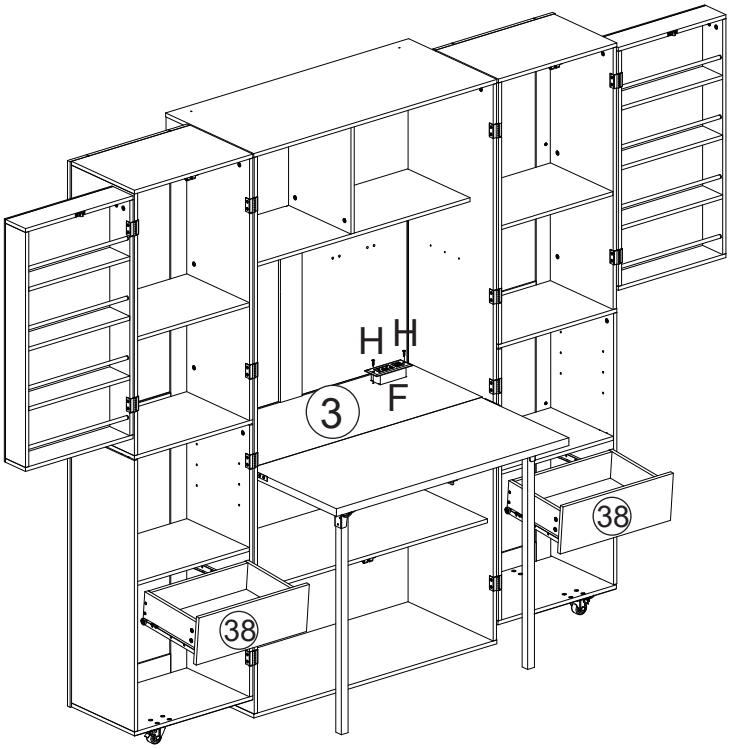

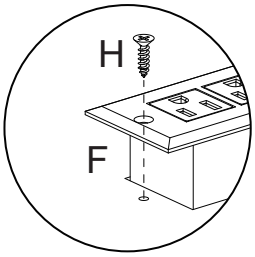

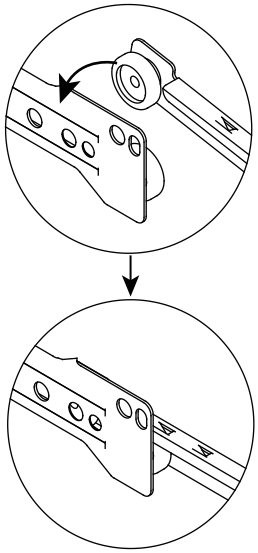

F	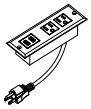	x1	H	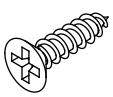	x2

Assembly

61

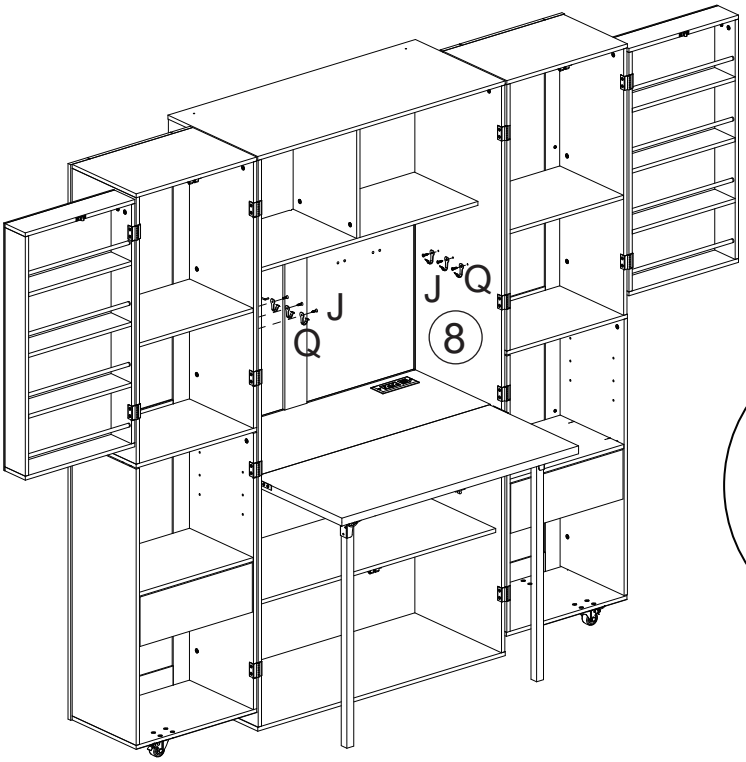

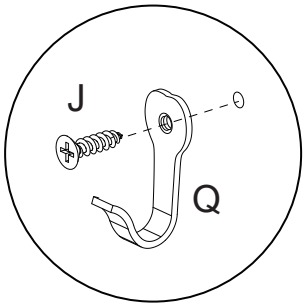

Q		x6	J	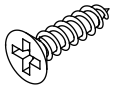	x6

62

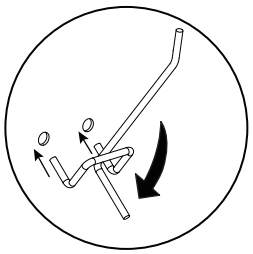

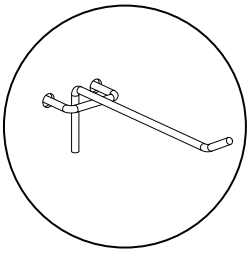

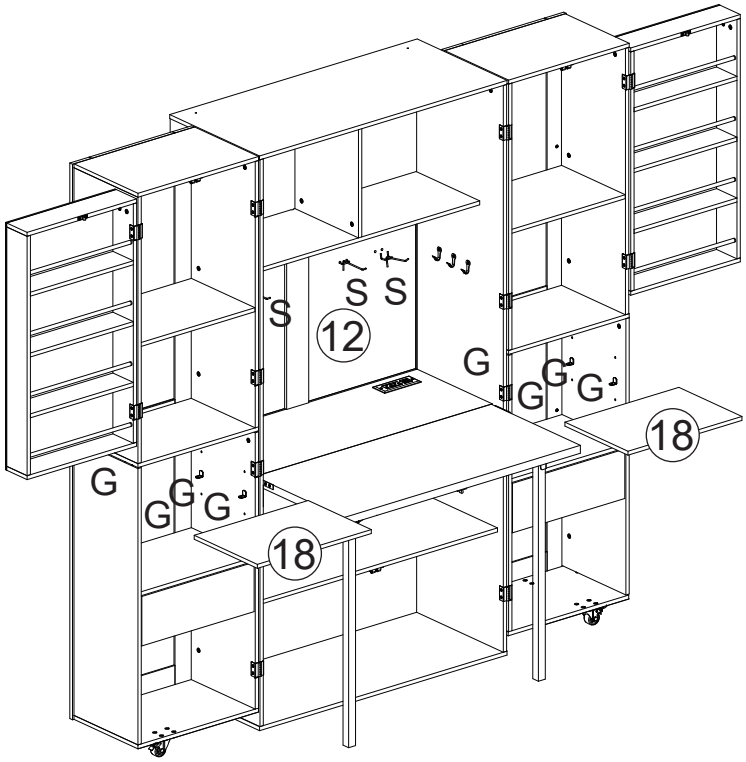

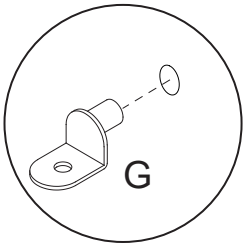

G		x8	S	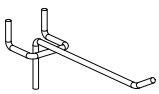	x10

Assembly

63

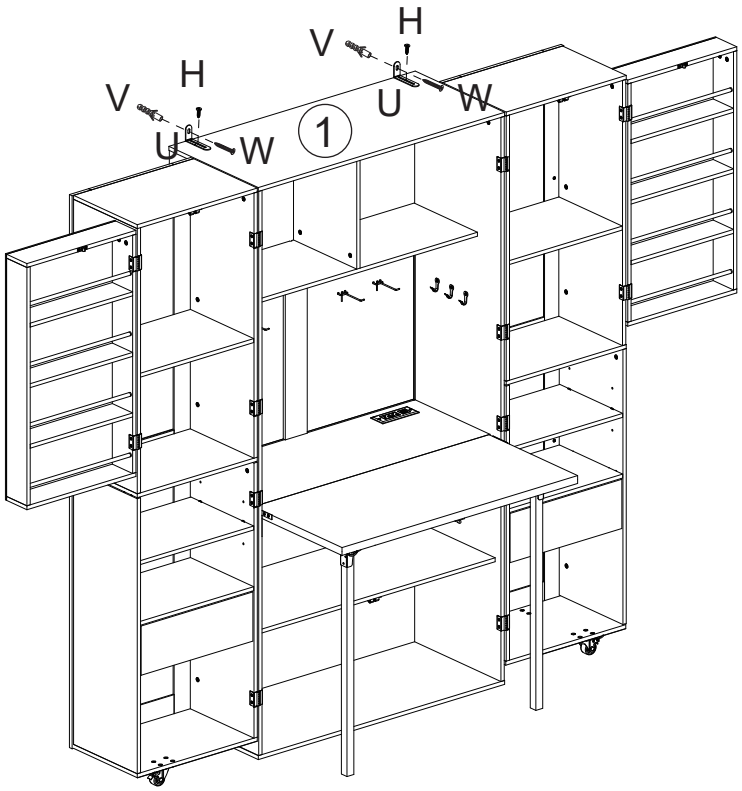

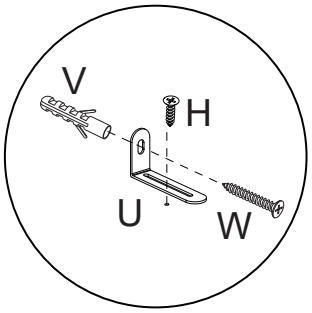

H	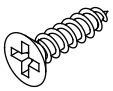	x2
U	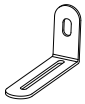	x2
V		x2
W		x2

64

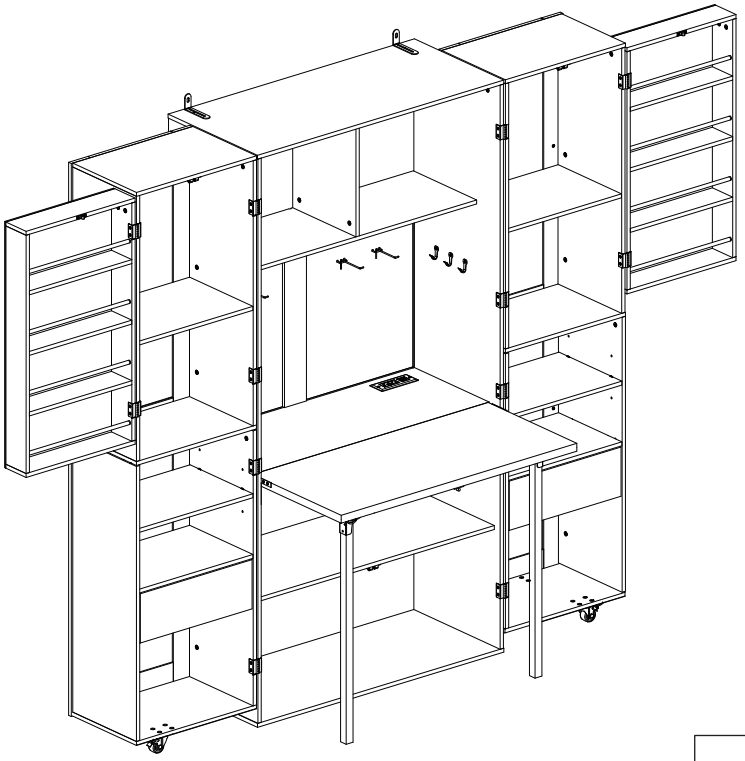

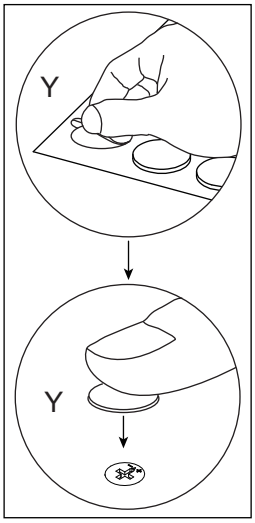

Y	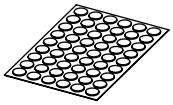	x1

Assembly

65

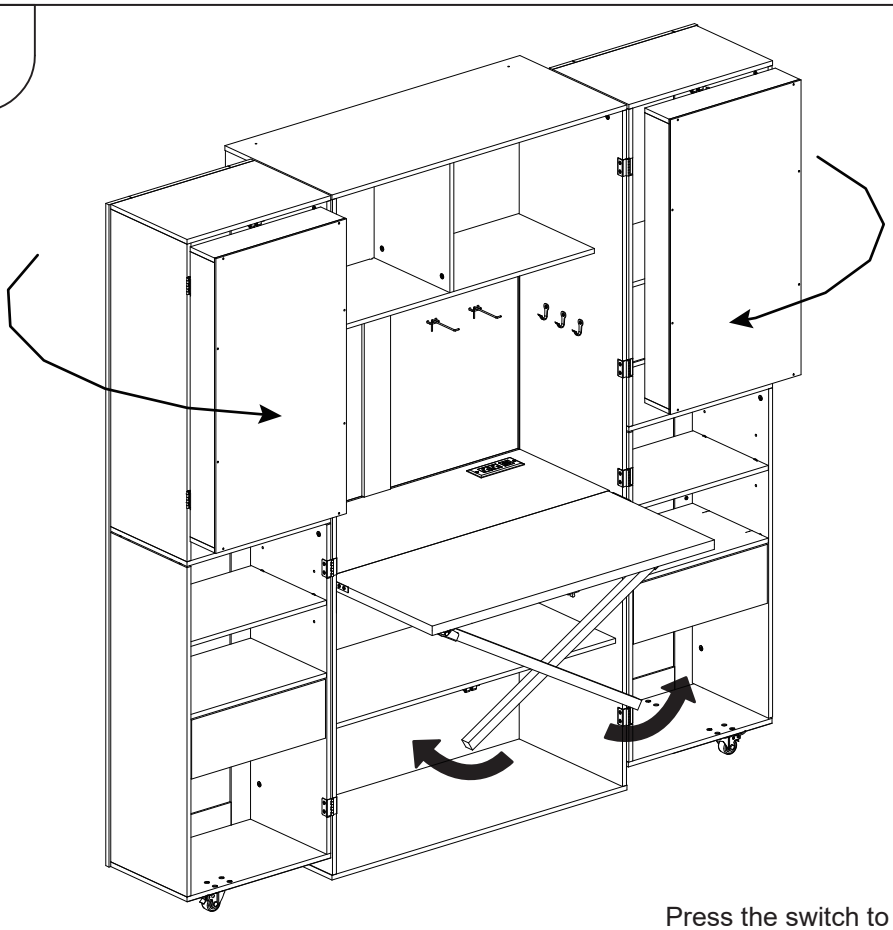

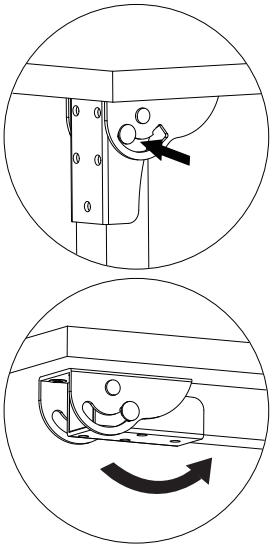

Press the switch to open or close the folding legs

66

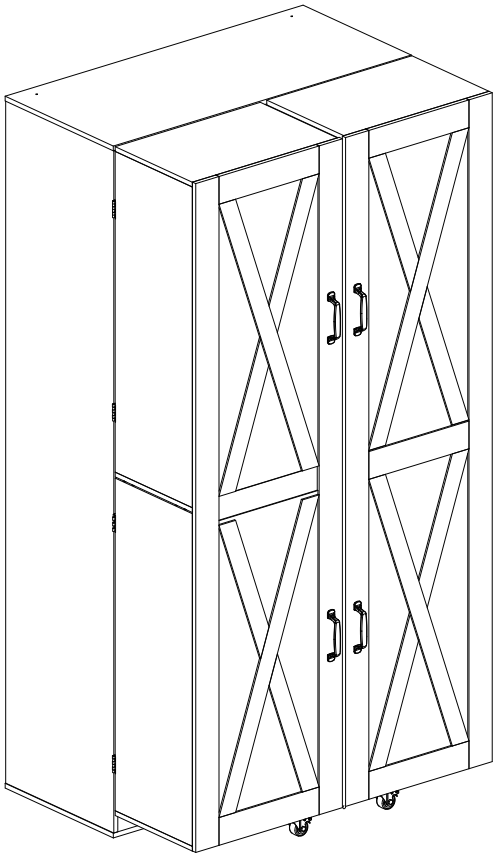

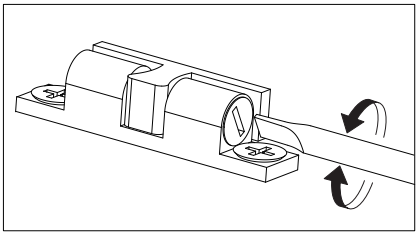

A single-head screwdriver can adjust the tightness of the ball bearings.

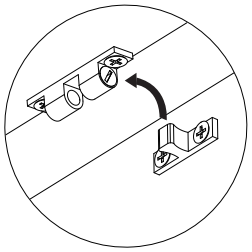

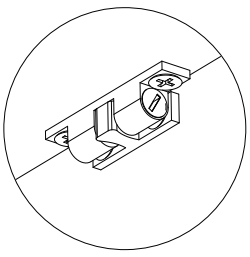

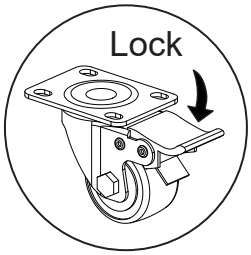

67

⚠ WARNING





Children have died from furniture tipover. To reduce the risk of furniture tipover:

- ALWAYS install tipover restraint provided.
- NEVER put a TV on this product.
- NEVER allow children to stand, climb or hang on drawers, doors, or shelves.
- NEVER open more than one drawer at a time.
- Place heaviest items in the lowest drawers.