LACAVA

FLOU
built-in bath/shower mixer
41PBP.L.S, 41PBP.L.S1

Specifications:

Installation:	built-in wall mount
Exterior Dimensions:	W: 5 1/8” H: 7 1/4” or 5” x 5”
Material:	solid brass construction with ceramic disc cartridge
Water use:	5.6 GPM (43.5 PSI)
Finishes:	CR - polished chrome NI - brushed nickel 44 - matte black
Fittings included:	Rough-in # VPBP W: 5 1/8” H: 7 1/4” trim # 41PBP.L.S-A 5” x 5” trim # 41PBP.L.S1-A
Tile opening max size:	Ø 4”

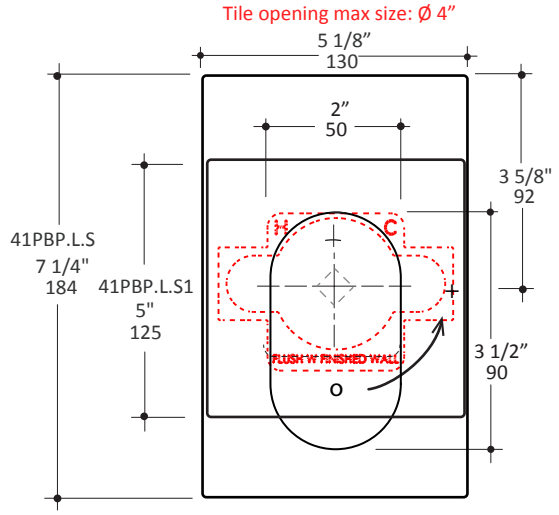

Features:

- pressure balancing valve with universal rough-in VPBP
- trims sold separately rectangular backplate W: 5 1/8” x H: 7 1/4” or square 5” x 5”
- lever handle
- single ceramic progressive disc cartridge
- anti-scald protection & temperature regulation for flow rates as low as 1.75 GPM
- screwdriver service stops
- 1/2” Male NPT inlets & outlet, optional sweat connections
- 1” extension kit available

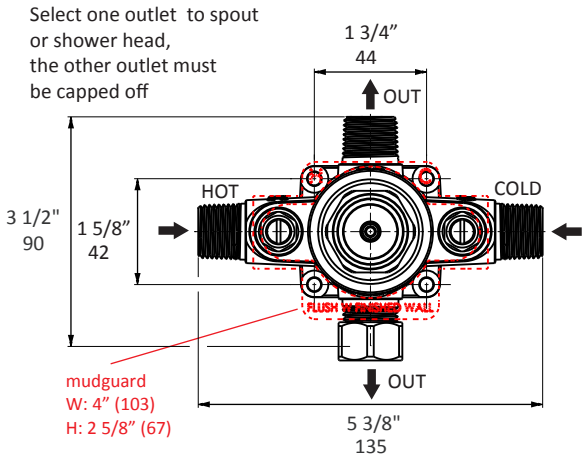

Codes + Standards:

- Meets and exceeds applicable national codes
  - ASME A112.18.1/CSA B125.1
  - ASSE 1016/ASME A112.1016/CSA B125.16
- CAL-Green compliant

ADA compliant when installed to specific requirements of this regulation

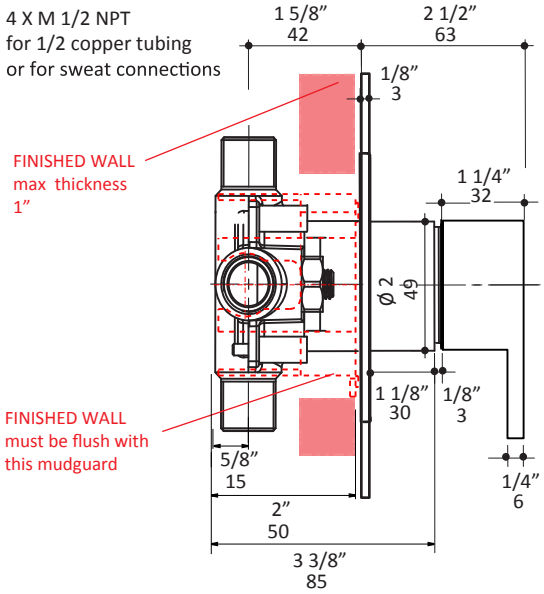

Recommended Items:

- Replacement parts:
  - VPBP rough-in
  - 41PBP.L.S-A trim W: 5 1/8” H: 7 1/4”
  - 41PBP.L.S1-A trim 5” x 5”
  - VPBP-C ceramic cartridge
  - VPBP-EX 1” extension kit

LACAVA reserves the right to revise any dimension or information on this sheet without notice. Dimensions are nominal and may vary within an industry accepted tolerance of 1/4”. Drawings provided herein are meant to give the user an idea of the product and are not made to scale. Location of plumbing is meant for reference, your specific application may vary.
Revised: 3/4/2024