CHILDREN ELECTRIC CAR

Installation and Operation Instruction

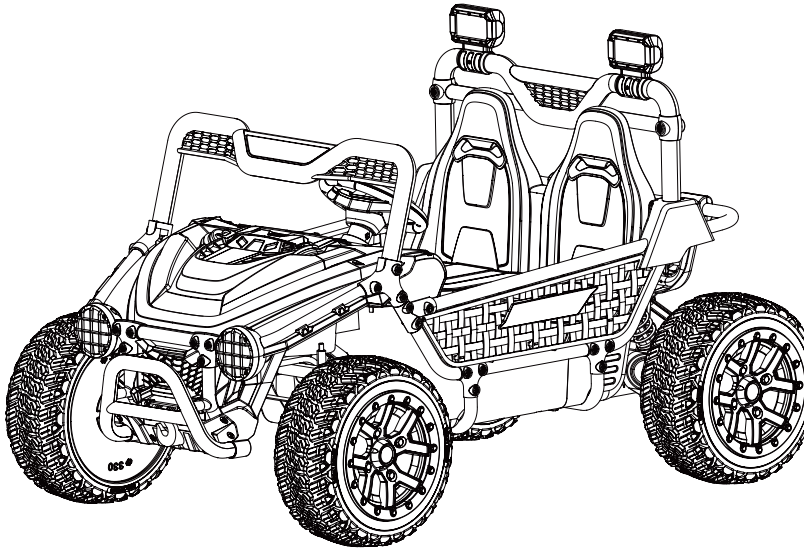

Installation video

Picture is for reference only, and the product is subject to practicality.

MADE IN CHINA

To prevent operational errors or damage, please read these instructions thoroughly before installation. Always ensure the child's safety. Please keep this specifications for future reference.

Specification

Storage battery	18V7AH*2(36V)
Electric motor	Drive motors: RS555 Steering motor: RS390
Suitable age	37 months+
Max weight	50 KG
Size	1280x810x784mm
Speed	7km/h-12km/h
Utility	7-10hours(charge)
Charger	AC100-240V50/60Hz(input),DC36V(output)
Battery of Remote control	Two pieces of AAA1.5V(Not Included)



Kind reminder

- Small parts. Not suitable for children under 36 months!
- Product should be adult assembly! Please be careful with screw split pin and other dangerous sharp tip!
- In order to avoid small parts caused by injury and accidental ingestion may cause choking hazard, please send small parts away from children under 3 years old!
- The children can not drive alone without adults,and caregivers in use process shall not be allowed to leave!
- Please recharge before using this product and charging the storage battery by the adults!
- To avoid harming children, please keep the packaging materials such as plastic bags away from them!
- Please check the product regularly to make sure that the electric wire, plugs, outer case and other parts are normal. If something is damaged, please stop using the car until it is fixed!
- Two AAA dry cells are for the remote control!
- Use all the cells or batteries in right way!
- Please don't insert the output socket If the line with no connection!
- The packaging and instructions must be retained since it contains important information!

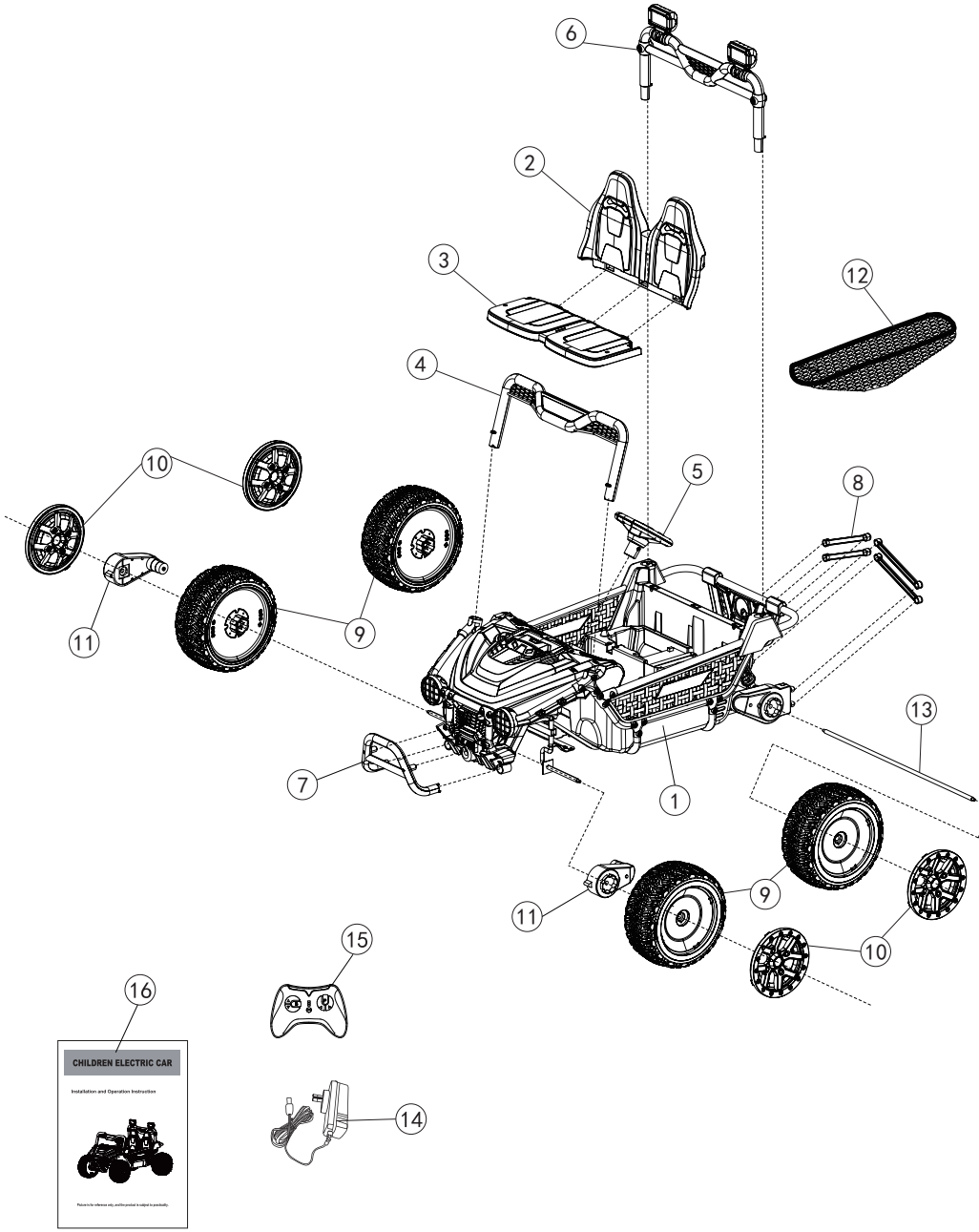
6
2
3
12
4
10
5
8
11
9
7
1
13
9
11
10
15
16
14
CHILDREN ELECTRIC CAR
Installation and Operation Instruction

Parts Names

Number	Name	Quantity(PCS)	Remarks
1	Car body	1	
2	Seat back	1	
3	Seat bottom plate	1	
4	Front windshield	1	
5	Steering wheel	1	
6	Rear light bracket	1	
7	Front bumper	1	
8	Rear decorative parts	4	
9	Wheel	4	
10	Wheel cover	4	
11	Front driving motor	2	
12	Rear string bag	1	
13	Rear axle	1	
14	Charger	1	
15	Remote control	1	
16	Manual	1	
Hardware	5X35mm screw	1	
	5X12mm screw	1	
	8X35mm pin shaft	2	
	R-shaped split pin	2	
	4X12mm self-tapping screw	10	2 more for spare parts
	M8 washer	2	
	M12 washer	4	
	M10 lock nut	4	
	M5 lock nut	2	
	Plastic wrench	2	
	Iron wrench	1	

Installation Steps:

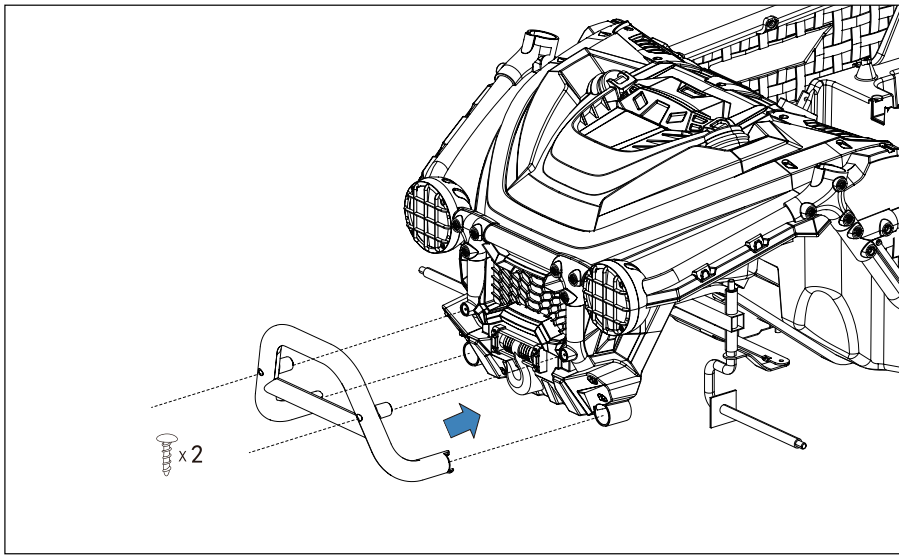

1.Install the front bumper

First insert the front bumper into the front hole of the car body,and then fix it with two 4*12mm self-tapping screws.

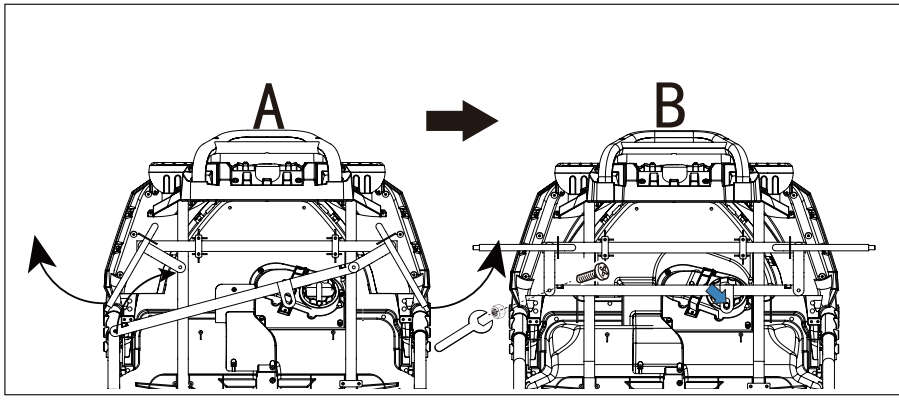

2.Adjust the steering bracket

Adjust the steering bracket from Figure A to Figure B,then use a screwdriver and the iron wrench to fix the steering bracket with a 5x12mm screw and M5 lock nut.Please don’t over tighten the screw.

Installation Steps:

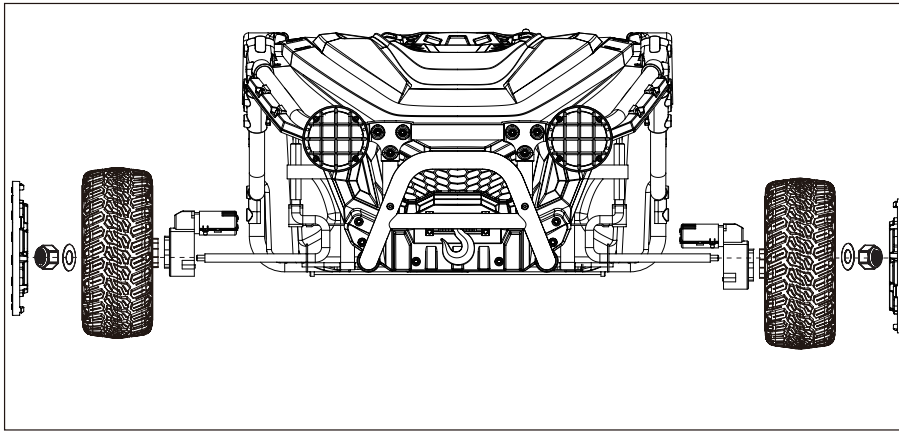

3.Install the front wheels

a,Put the “F/L”drive motor to the left side of the front axle and the “F/R”drive motor to the right side.Connect the motor wires with power wires protruding from the car body.

b,Install the left and right wheels to the front axle,add the M12 washer and M10 lock nut,then fix them with the plastic wrench.Finally,aim the wheel cover at the holes in the wheel and clamp it.

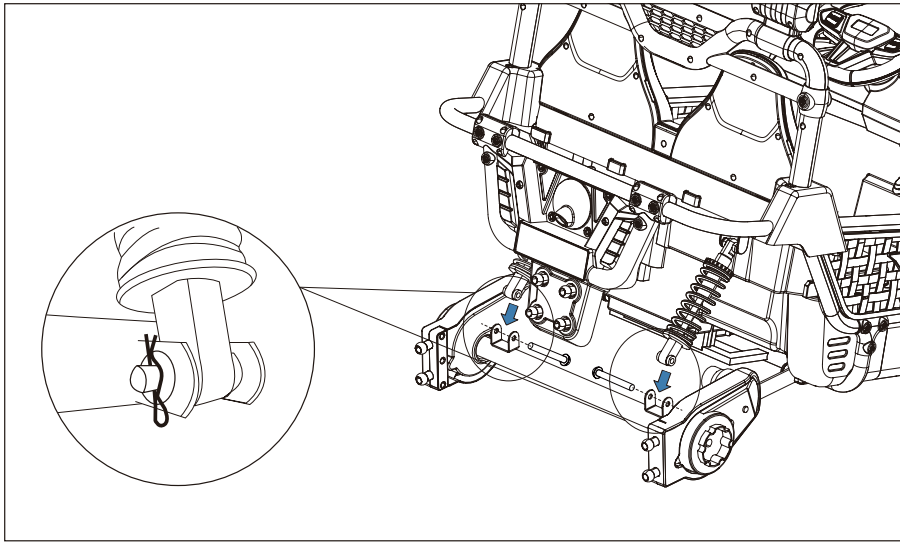

4. Fix the rear shock absorber

a. Insert the end of shock absorber into the hole of the frame base in the direction of the arrow, so that the hole is in a straight line.

b. Insert the 8x35 pin shaft and add an M8 washer, then fix it with an R-shaped split pin.

Installation Steps:

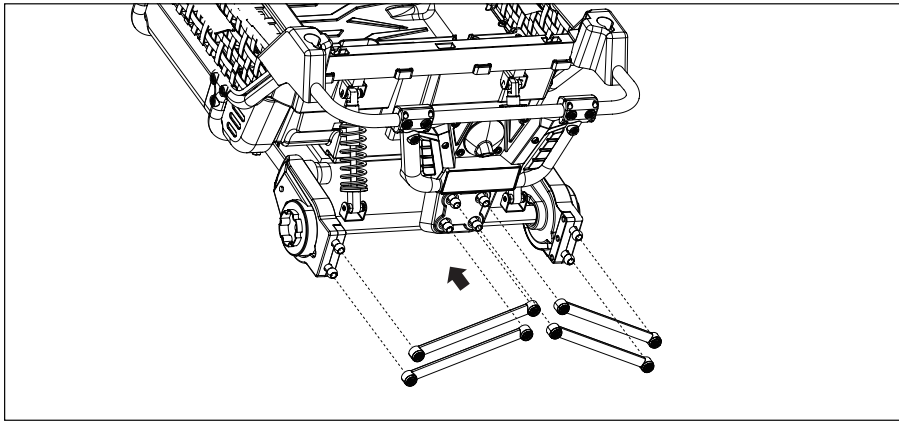

5. Install the rear decorative parts
Insert the rear decorative parts into the plastic parts on the motor base and rear bumper separately.

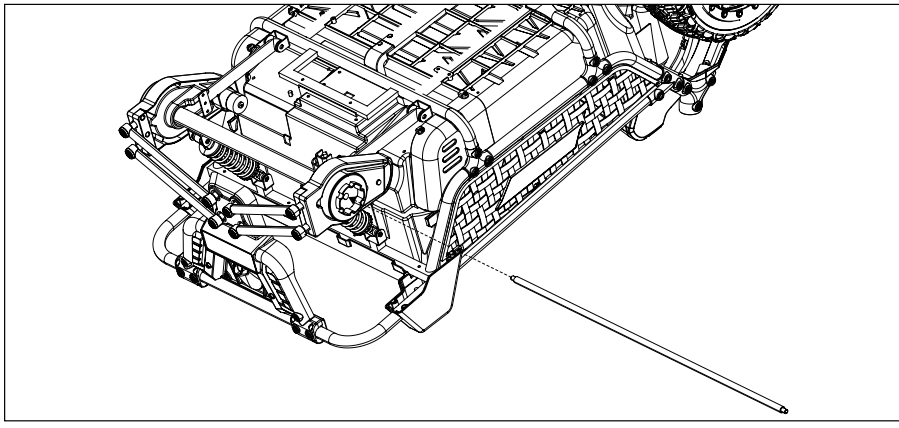

6. Install the rear axle
Insert the rear axle into the car body in the direction of the arrow,and make the length of the left and right sides of the rear axle symmetrical.

Installation Steps:

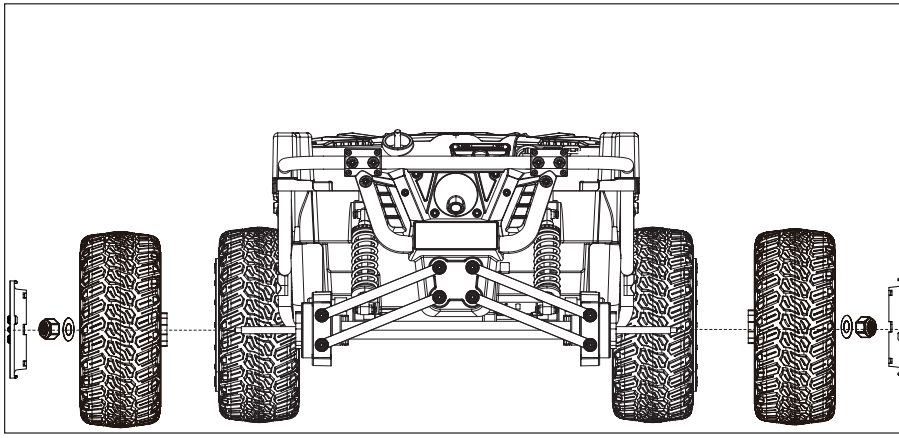

7. Install the rear wheels
Install the left and right wheels to the rear axle,add the M12 washer and M10 lock nut,then fix them with the plastic wrench.Finally,aim the wheel cover at the holes in the wheel and clamp it.

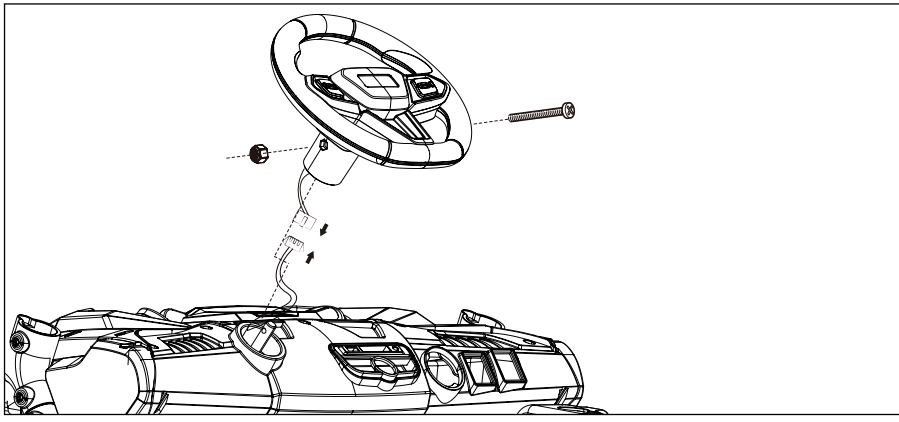

8. Install the steering wheel
Connect the wire of steering wheel to the power wires on the steering wheel base.Then insert the steering lever into the center hole of the steering wheel. Finally insert 5*35mm screw through the hole on the steering column base and fix it with a M5 lock nut.

Installation Steps:

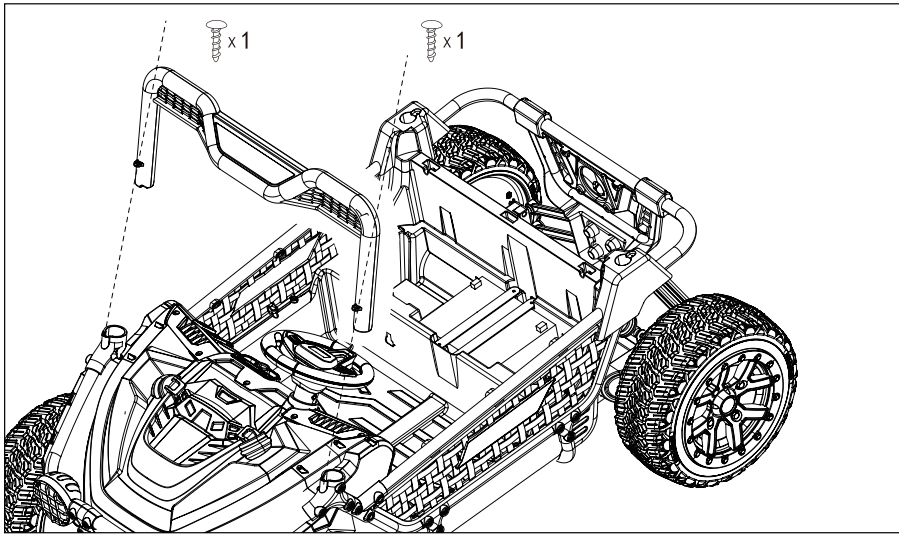

9. Install the front windshield
Install the front windshield into the hole of the car body, and then fix it with two 4*12mm self-tapping screws.

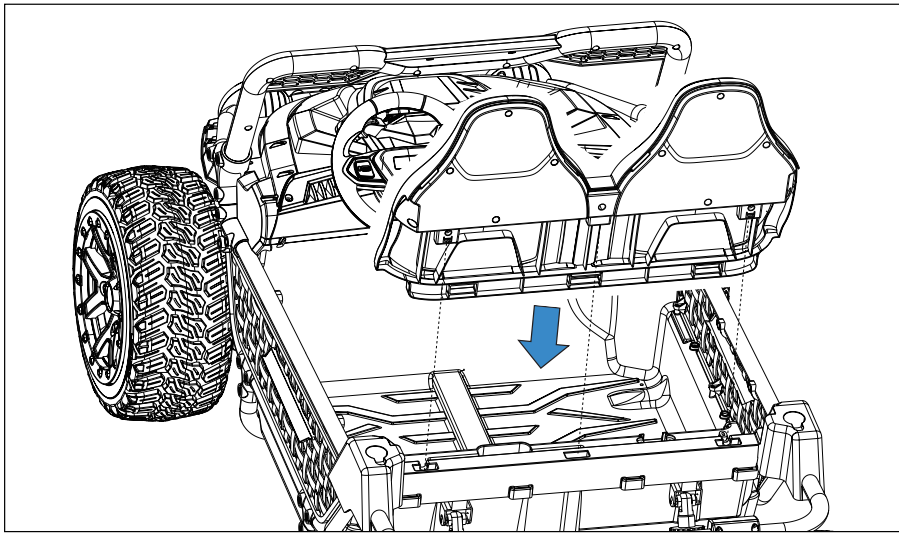

10. Install the seat back
Insert the seat back into the hole of the rear guard.

Installation Steps:

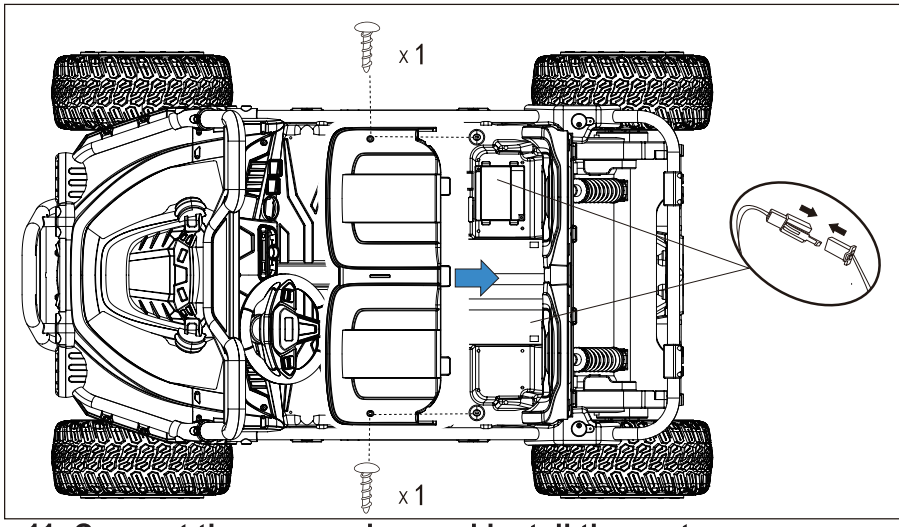

11. Connect the power wires and install the seat

Connect the power wires:Connect the power wire on the battery to the power wire on the receiver.

Install the seat :First slide the seat into the hole under the seat back, then fix it with two 4*12mm self-tapping screws.

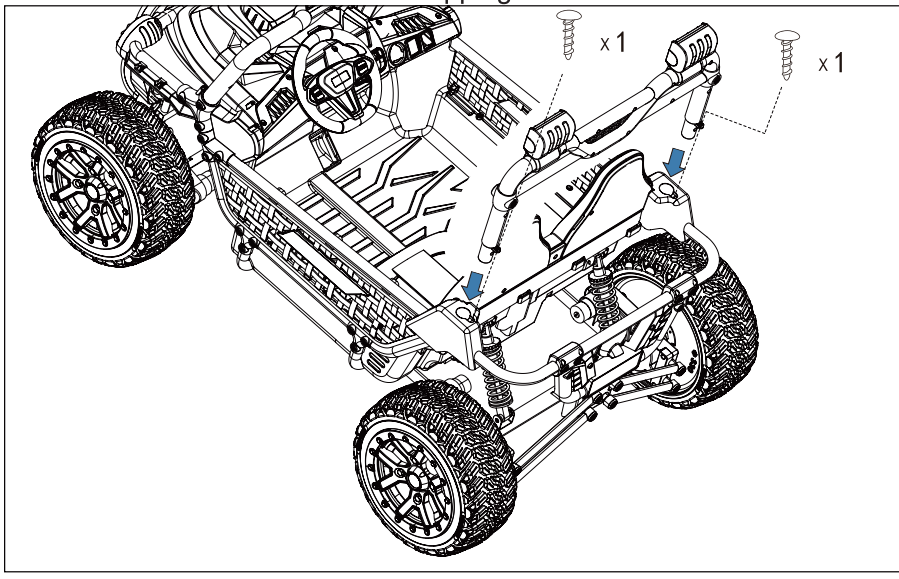

12. Install the rear light bracket

First insert the rear light bracket into the position indicated by the arrow in the picture, then fix it with two 4*12mm self-tapping screws.

Function instruction:

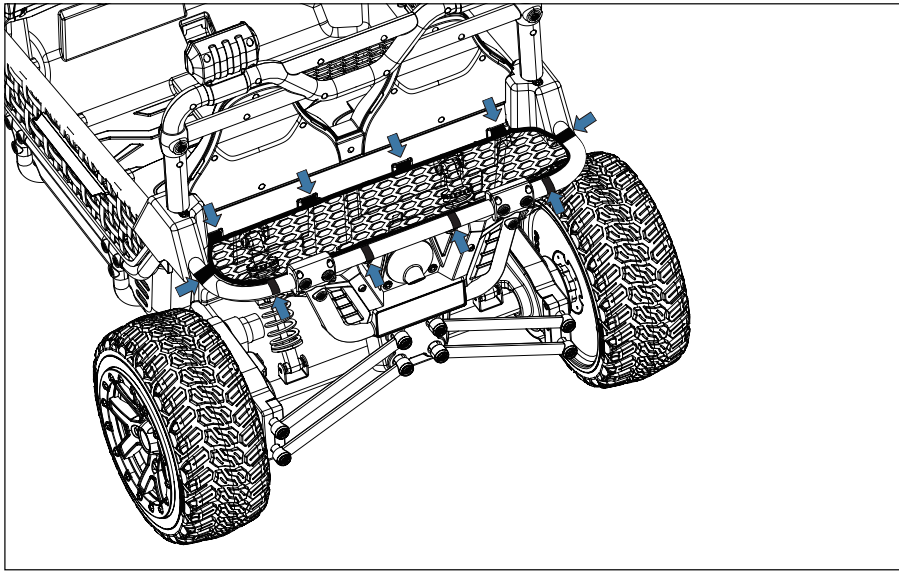

13. Install the rear string bag
Fix the rear string bag with Velcro at the position indicated by the arrow in the picture at the rear of the vehicle.

Function instruction:

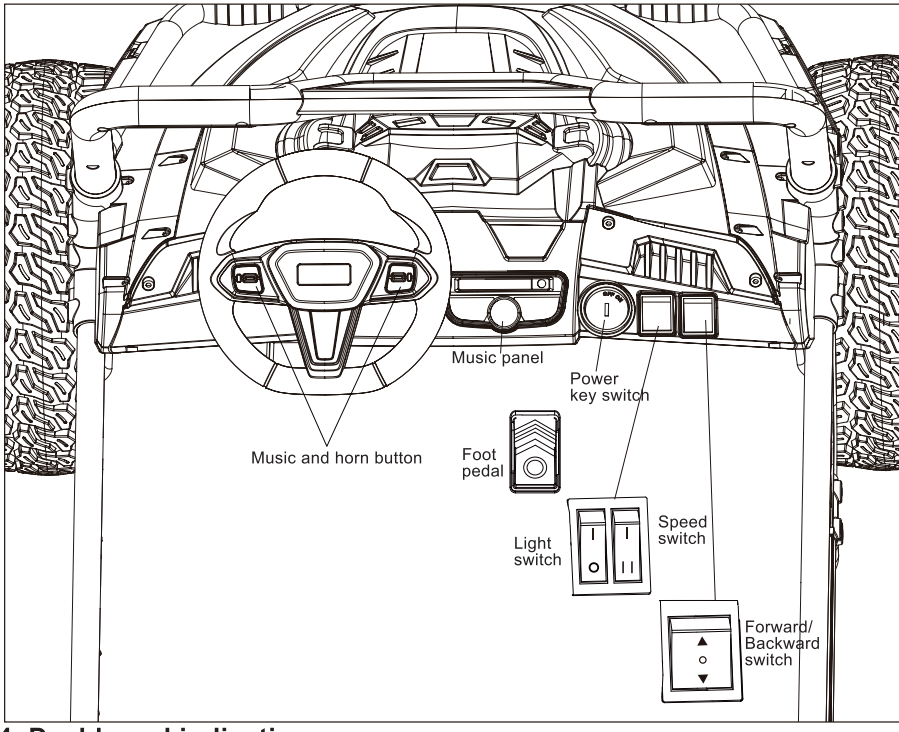

14. Dashboard indication

a.Power key switch

Insert the key into the keyhole,turn right to power up the car with the engine sound.

b.Forward/Backward switch

In manual steering mode,children can press the Forward/Back switch to go forward,reverse or stop.

c.Speed switch

Press the green switch to choose speed mode. “I” for low speed. “II” for high speed.

d.Light switch

Press the red switch to turn on/off the front lights.

e.Music and horn button

There are two buttons on both side of the steering wheel. Press music button on the left to play built-in music, press horn button on the right to play the horn sound.

f.Foot pedal

Step the foot pedal can control the car to move forward, backward or stop.

g.Music panel

Music panel is on the right side of the steering wheel.You can either press the music button on the steering wheel or on the music panel to play built-in music.Middle knob for volume adjustment.To play music or story from external source,you can press the B button for mobile connection or use port for USB connection.

Function instruction:

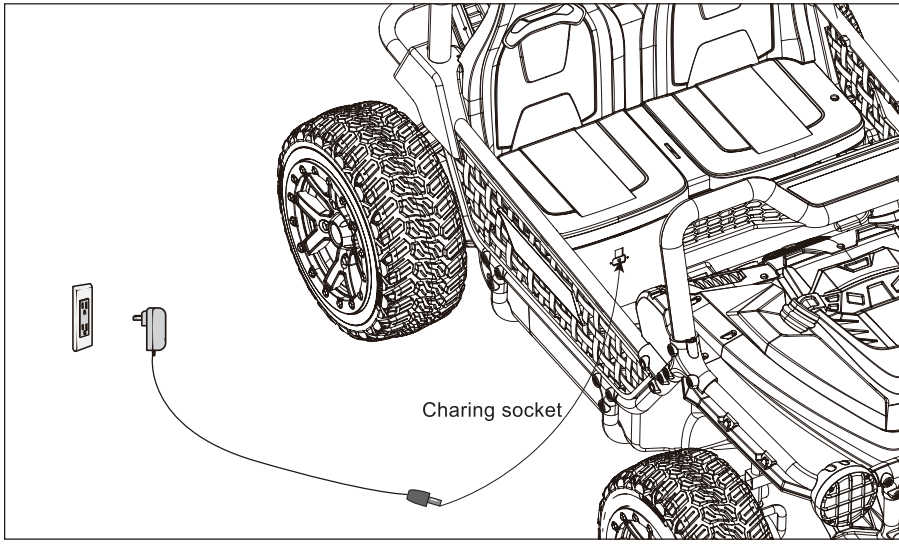

15. Charging indication

a.When the power indicator on the music player lights up two or less red light, it indicates the battery is running down. And you will hear a voice prompt. Please stop using the car and recharge the battery in time to avoid irreversible damage to the battery.

b. **Charging method**: Insert the output end of the charger into the charging hole on the car body, and the charger into the power socket.

Note: While charging, the car is in charge protection mode and has no function. Only when the charger is pulled out from the charging hole above the battery, the car will return to the normal mode !

2.4G Remote control instructions

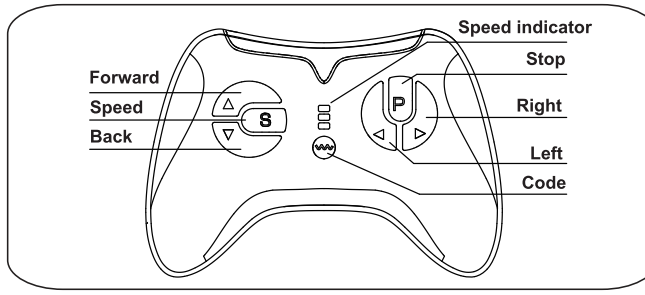

For the first time need to code ,this product has a memory function .When you change battery next time, you don't need to match the code once again.

①Long press "Code"button more than three seconds,until the first LED lights flashing.

②Open body power ,first a long bright LED turns on the success of the code.

③Remote control 10 seconds without operating automatic standby , press any key to wake up.

④Key Description: "△"Forward, "▽"Back, "◁"Left "▷"Right, "S"Speed, "P"Stop.

Press the "S" key to set the speed, a light is low, two lights for medium-speed, three lights for high-speed, the car back with only medium-speed. Press the "P" key to keep the brakes, the indicator full flash, press the brake button again to lift the brake.

Note: The remote control should be used by caregivers and cannot be touched by children.

Dry cells warning!



（1）Non-rechargeable cells cannot be charged.

（2）Only can be charged by adults.

（3）Rechargeable cells should be removed from the toy before being recharged.

（4）Different types of cells or old and new cells should not be mixed to use.

（5）Cells should be put in with the correct polarity.

（6）Exhausted cells should be removed from the toy.

（7）The power terminal should not be short-circuited.

Warning:containing small parts may cause choking hazard!

Fault and Solutions:

Type of fault	Analysis of causes	Solutions
Can not move	1.Voltage is below normal level	Charge the battery
	2.Safety wire protects	Wait for a while
	3.The screw on the wheels have fell off	Tight the screw again
	4.Battery connector has fell off	Come on again
	5.Battery is damaged	Change the battery
	6.Electrical equipment is damaged	Bring it to repair in maintenance points
	7.Motor is damaged	Bring it to repair in maintenance points
The battery can not be charged	1.Battery connector have fell off	Plug into again
	2.Battery charger is power off	Plug into again
	3.Battery charger is damaged	Change the battery charger
Distance per charge is short	1.Battery is not full	Charge the battery again
	2.Battery is old	Change the battery
Some noise and heat, when charge the battery	1.Chemical reaction	Normal
Low speed	1.Battery is old	Change the battery
	2.Battery is out of power	Charge the battery again
	3.Over weight	Keep the weight under 50kg
	4.Undulate pavement	Smooth path

Gear case with high noise	1.Gear is broken	Bring it to repair in maintenance points
The car shake when it go forward	1.Bad connection of the motor connector wires 2.Something wrong with the motor	Connect well Bring it to repair in maintenance points
Drive without music	1.Electrical equipment is damaged	Bring it to repair in maintenance points
If you can not solve the problem,please feel to contact us.		

Kind reminder:

(1)Before the first use, make sure the battery has been charged over 7-10 hours, otherwise it will be damaged forever.

(2)Do not drive the car on the slipped street,road,slop and other dangerous places.

(3)Do not drive the car on the smooth surface,such as marble and floor tile.

(4)Do not be overweight. The maximum load is 50Kg.

(5)Do not transfer the switch "Forward" and "Backward" while driving.

(6)Do not change the wires of the car or attach live devices.

(7)Keep the remote control and car away from the rain ,the wet thing and fire, in order that the circuit is not damaged.

(8)When the car meets some obstacle,it will stop. Please leave the obstacle before driving.

(9)Do not drive the car in the room to protect children and furniture.

(10)When the remote control power is low, the car just go forward, not turn left or right.

(11)When the car not go farther or shake, you should change a new battery at once.

(12)Please turn off the power when the car is not in use, and disconnect the battery connector when the car will not be used for a long time.

Kind reminder for charging:

- Make sure the battery has been charged over 7 to 10 hours or the charger indicator turns green before the first use, otherwise the battery will be damaged forever.
- Connect the charger connector to the battery connector,then insert the charger on the plug.
- After using 1 hour,you should charge in time. It takes 7 to 10 hours to charge normally.
- Do not charge over 20 hours one time.
- It is normal to have some heat for charger and battery when it is charging.(low than 60°C)
- In order to protect charger,battery and circuit,please use the special charger and battery from factory.
- Connecting terminal can not be a short circuit.
- Do not mix to use old and new batteries or different types of batteries.
- Make the battery charge once a month at least when the car is not driven for long time.
- Charge the battery by the adult.

Chargers and battery maintenance:

- Unscrew the screw on the battery cover, remove the battery cover, take out and put the battery, finally fix the battery cover with the screw.
- The charger should be placed waterproof and moisture-proof.
- Before charging, check whether the external surface of the charger is damaged, whether the plug is corroded, and whether the wire is cracked. This charger cannot be used to charge in any case.
- Check the battery regularly for leakage.
- Charge only under adult supervision.
- Batteries should be connected with correct polarity. (Red to red, black to black)
- Connecting terminal can not be a short circuit.

Maintenance:

- Before the installation, make sure the parts are complete. If you have any question, please feel free to contact us.
- Make sure every part is complete when installing and using.
- Please clean the car regularly.Do not damage the electrical equipment.
- Please check and maintain the car for the children's safety.

Criteria of product operation :

EN71 EN62115 ASTM F963 CPSIA