Instruction

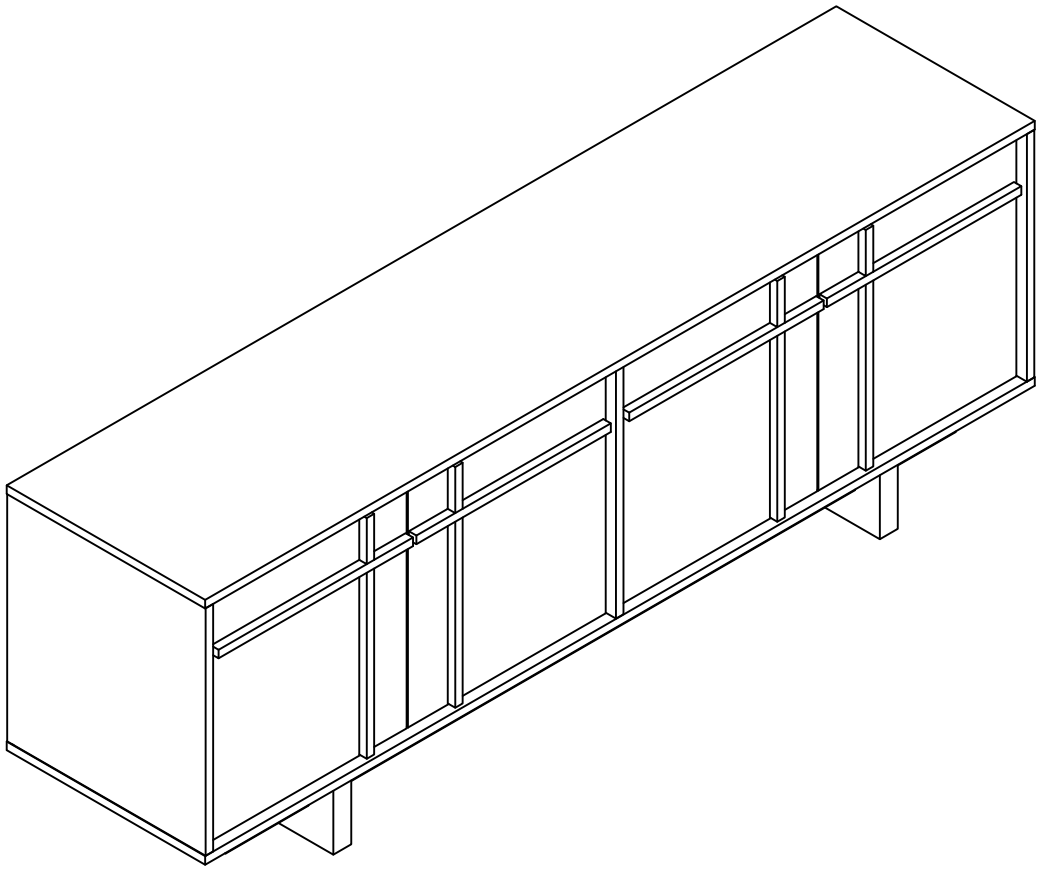

THIS INSTRUCTION BOOKLET CONTAINS IMPORTANT SAFETY INFORMATION. PLEASE READ AND KEEP FOR FUTURE REFERENCE.

Do Not Return This Product!

Contact our customer service team for help first.

WARNING

-Unit can tip over causing severe injury or death.
-Anchor unit to stud in wall (if instructed to)
-Do Not allow children to climb on unit.
-put heavy items on lower shelves or drawers.



Assembly Difficulty Meter

WARNING

Do NOT return this product!

Contact our friendly customer service team first for help.

fujiwahservice@outlook.com

HELPFUL HINTS

PEOPLE NEEDED FOR ASSEMBLY:2
ESTIMATED ASSEMBLY TIME:1 HOUR



Watch Assembly Video

on YouTube

-Open your item in the area you plan to keep it to avoid excessive heavy lifting.

-Identify,sort and count the parts before attempting assembly.

-Back panel must be used to make sure your unit is sturdy.

-Do NOT use harsh chemicals or abrasive cleaners on this item.

-Never push,pull,or drag your furniture.



BEFORE YOU START

- ☑ Read through each step carefully and follow the proper order
- ☑ Separate and count all your parts and hardware
- ☑ Give yourself enough room for the assembly process
- ☑ Caution: IF using a power drill or power screwdriver for screwing,please be aware to slow down and stop when screw is tight.Failure to do so may result in stripping the screw.

FAQ

Q: What if parts are missing or damaged?

A: If a part is lost or damaged, identify the part number according to the instructions and provide photos of the damage, we will resend you the appropriate part.

Q: What if I have trouble with the installation?

A: The product comes with instructions and an installation video, so if you still have questions, we can help further

Q: What if the product arrives damaged?

A: If a product is lost or damaged, please provide photos of the damage, we will provide you with a perfect after-sales protection, so that you can rest assured!

Q: What is the return policy?

A:Returns accepted within Amazon's 30-day window, Reach out with images/videos for speedy processing, Be cautious of potential fees for returns lacking seller or Amazon labels, Further clarifications can be requested.

CUSTOMER SUPPORT

Returns accepted within Amazon's 30-day window. Reach out with images/videos for speedy processing.
If you have any questions about the product or require after-sales support, please feel free to contact Amazon customer service or reach us via:

fujiwahservice@outlook.com

BOARD IDENTIFICATION

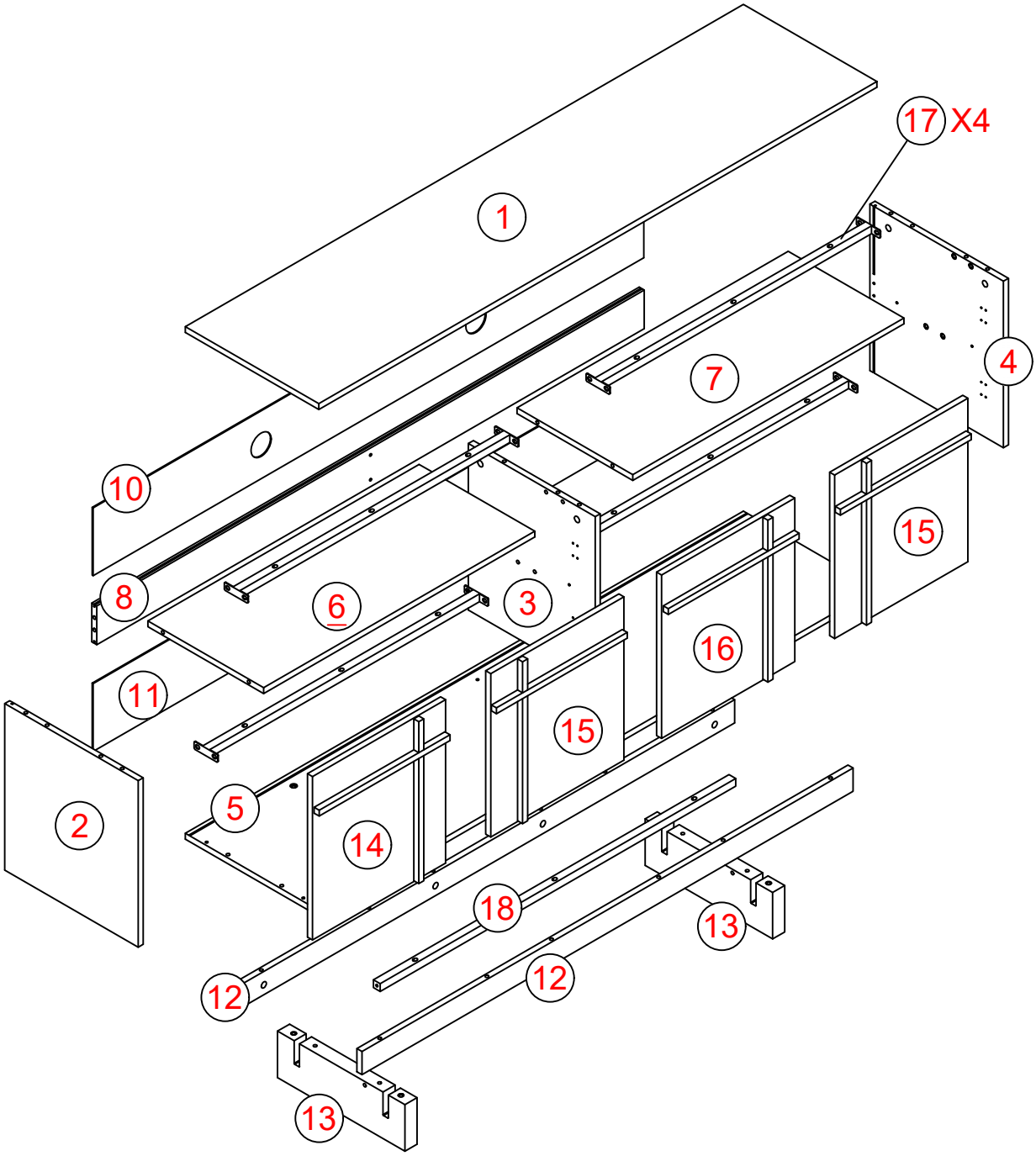

BOARD IDENTIFICATION

1 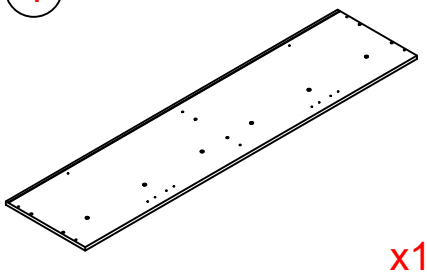 x1	2 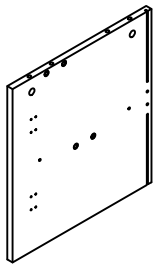 x1	3 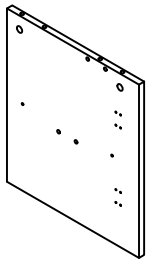 x1
4 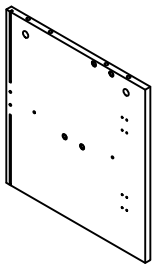 x1	5 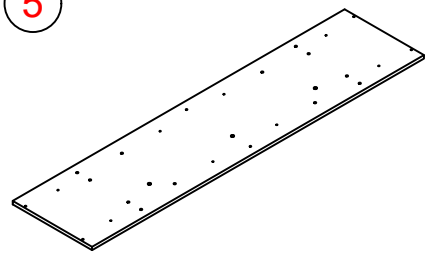 x1	6 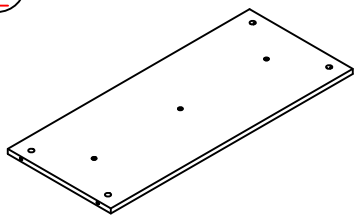 x1
7 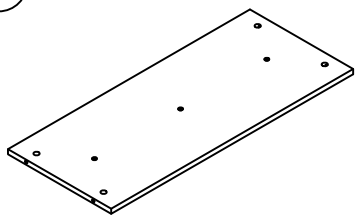 x1	8 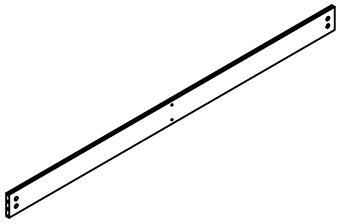 x1	10 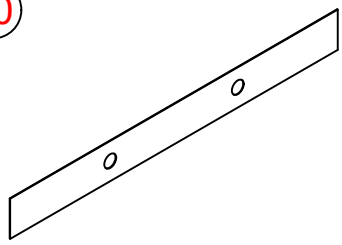 x1
11 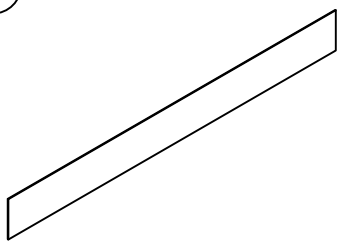 x1	12 x2 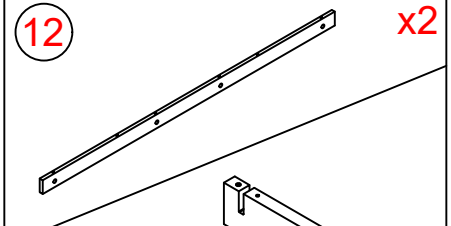 13 x2	14 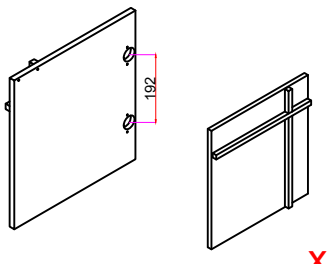 x1
15 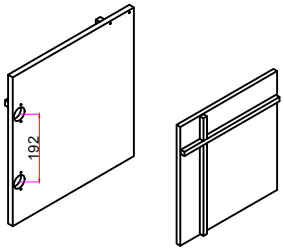 x2	16 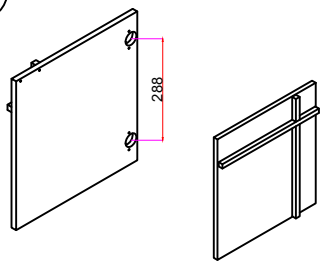 x1	17 x4 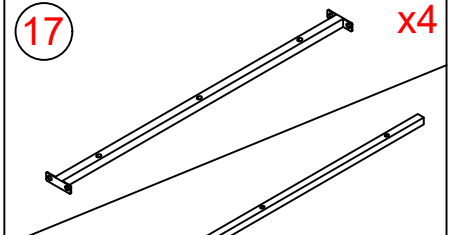 18 x1

THE HARDWARES

A M5X42  26 PCS	B Ø15X12  26 PCS	C M5X40 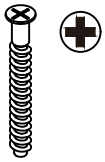 8 PCS	D Ø8X40  20 PCS	E M3.5X14  68 PCS	F  12 PCS
G M6X28  23 PCS	H M6  4 PCS	J M6X12  8 PCS	K 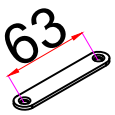 4 PCS	L 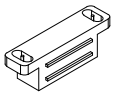 4 PCS	M M3X14  8 PCS
P Ø21  15 PCS	R M6X50  2 PCS	S 25MM-DW 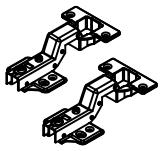 4 Right	T 30X30X3  4 PCS	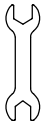 1 PC	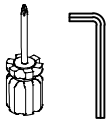 1 PC

 Phillips Screwdriver Power Tool NOT Recommended

IMPORTANT :

1. Do not tighten bolts / screws completely until all bolts / screws are lined up and inserted into holes.
2. Do not over tighten screws and bolts to avoid stripping.
3. Please use hand tools to assemble this product. Do not use power tools.
4. Must need 1 people to assemble this product.


2 PERSONS

CAM LOCK FASTENING SYSTEM

This Cam Lock Fastening System will be used throughout the assembly process.

1

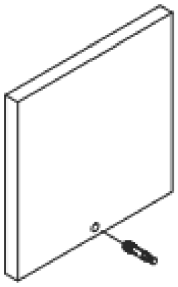

Press CAM BOLT into hole.

2

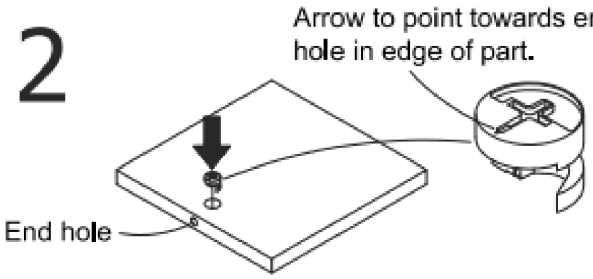

Press CAM LOCK into hole.

3

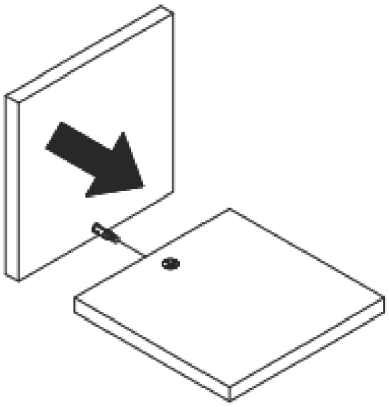

Press parts together so CAM BOLT inserts into edge hole.

4

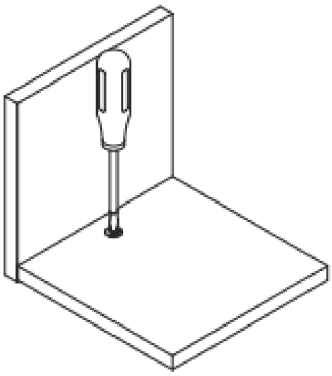

Using a screwdriver, turn the CAM LOCK clockwise to lock the CAM LOCK and CAM BOLT into their holes and fastening parts together.

M5X42

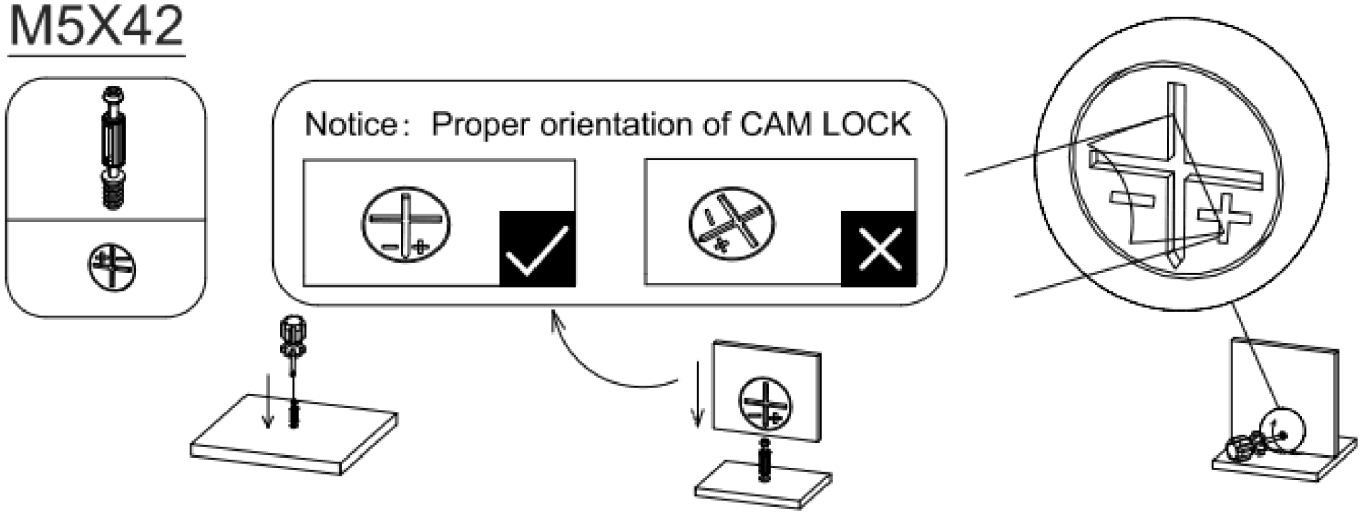

BOARD IDENTIFICATION

STEP 1

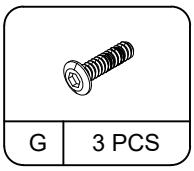

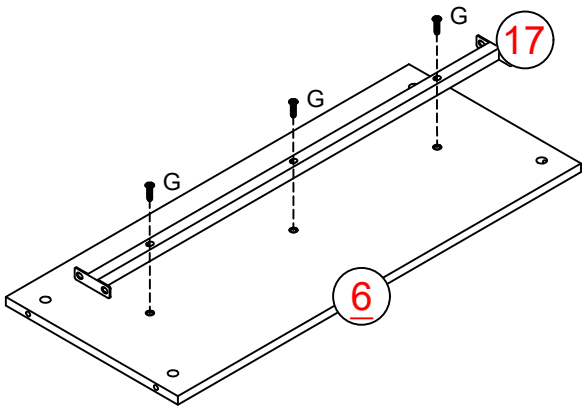

STEP 2

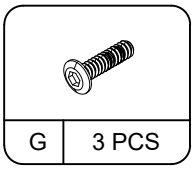

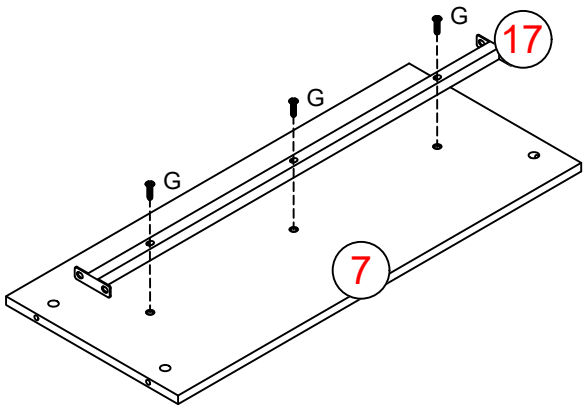

BOARD IDENTIFICATION

STEP 3

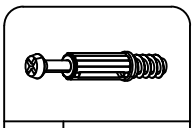

A	2 PCS

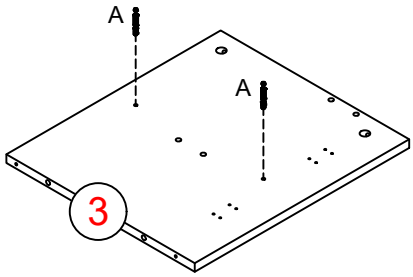

STEP 4



B	2 PCS

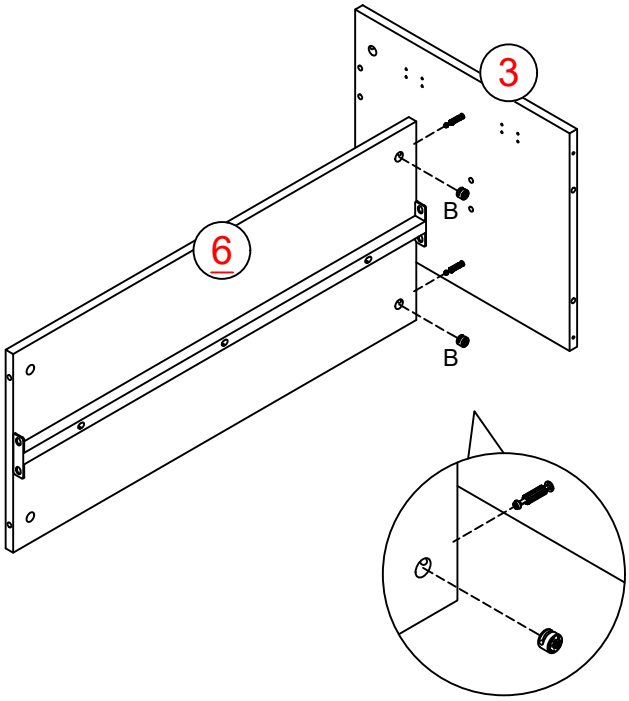

BOARD IDENTIFICATION

STEP 5

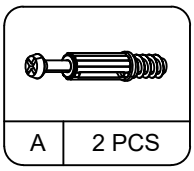

A	2 PCS

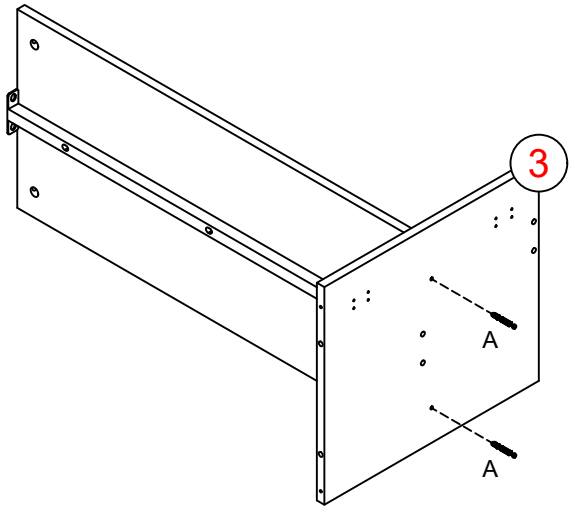

STEP 6

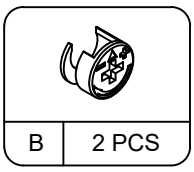

B	2 PCS

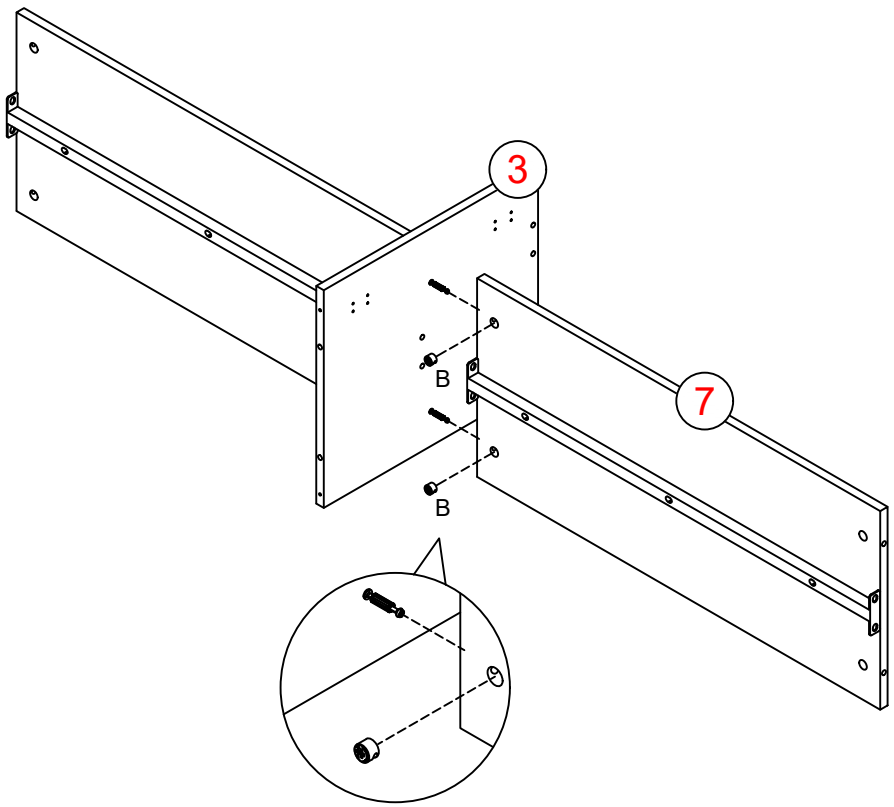

BOARD IDENTIFICATION

STEP 7

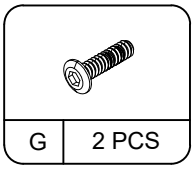

G	2 PCS

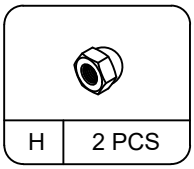

H	2 PCS

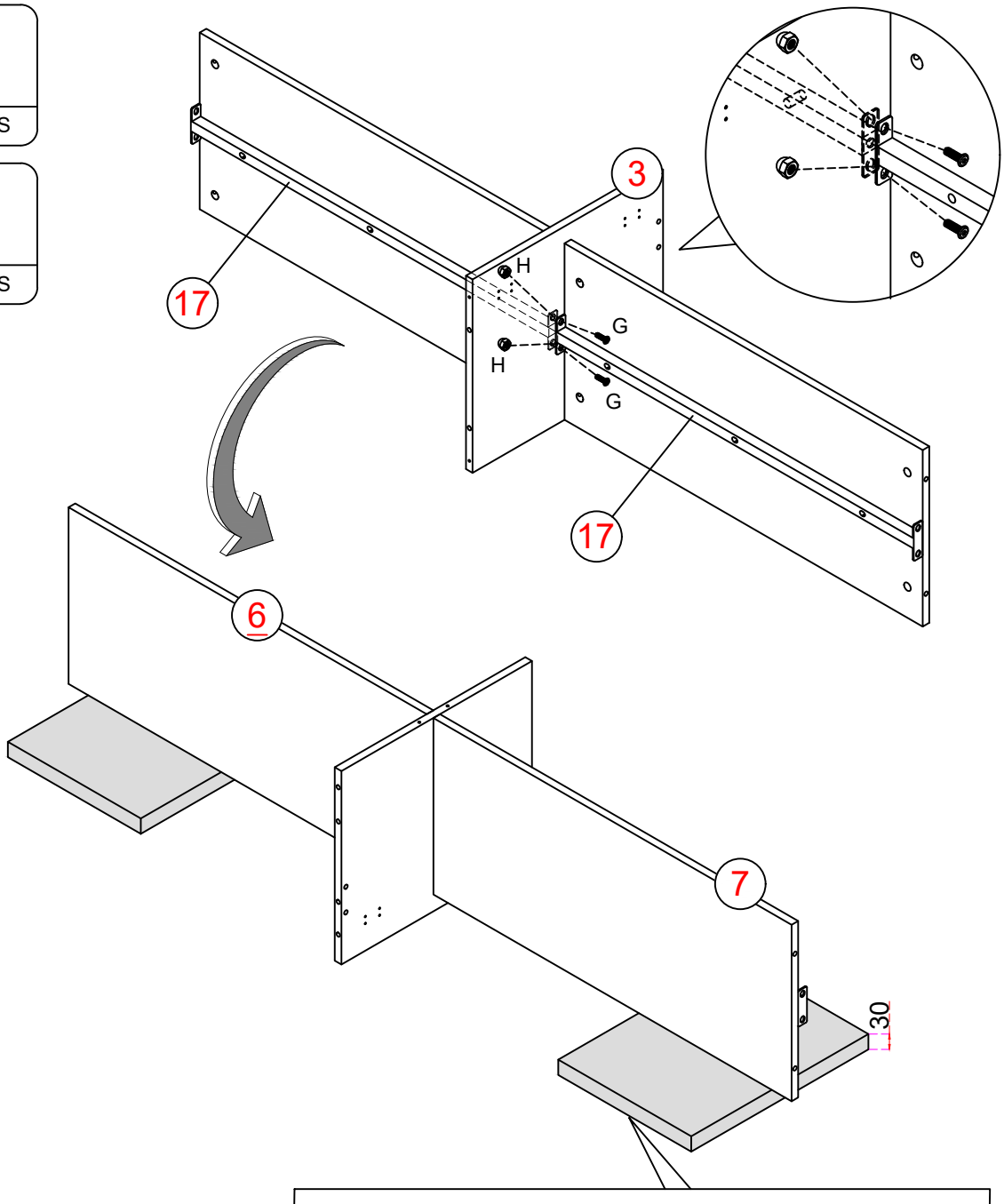

After this step, rotate the assembled board 360° and place a layer of 30mm material under the 7/6 board, ensuring are on the same plane.

BOARD IDENTIFICATION

STEP 8

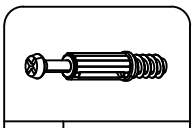

A	4 PCS

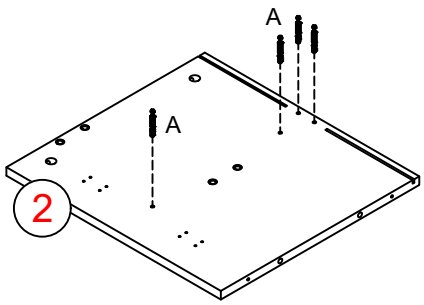

STEP 9

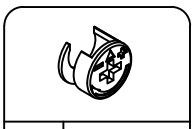

B	2 PCS

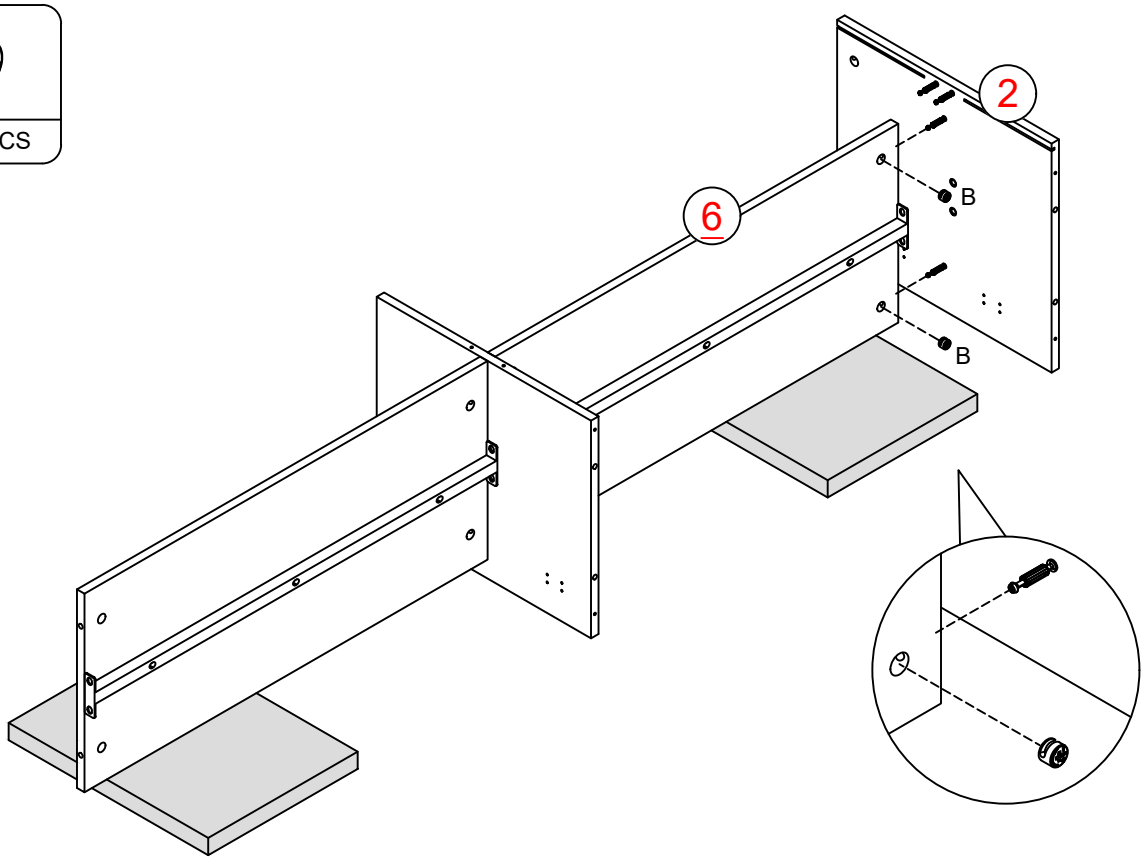

BOARD IDENTIFICATION

STEP 10

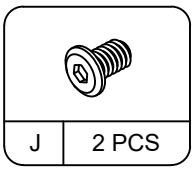

J	2 PCS

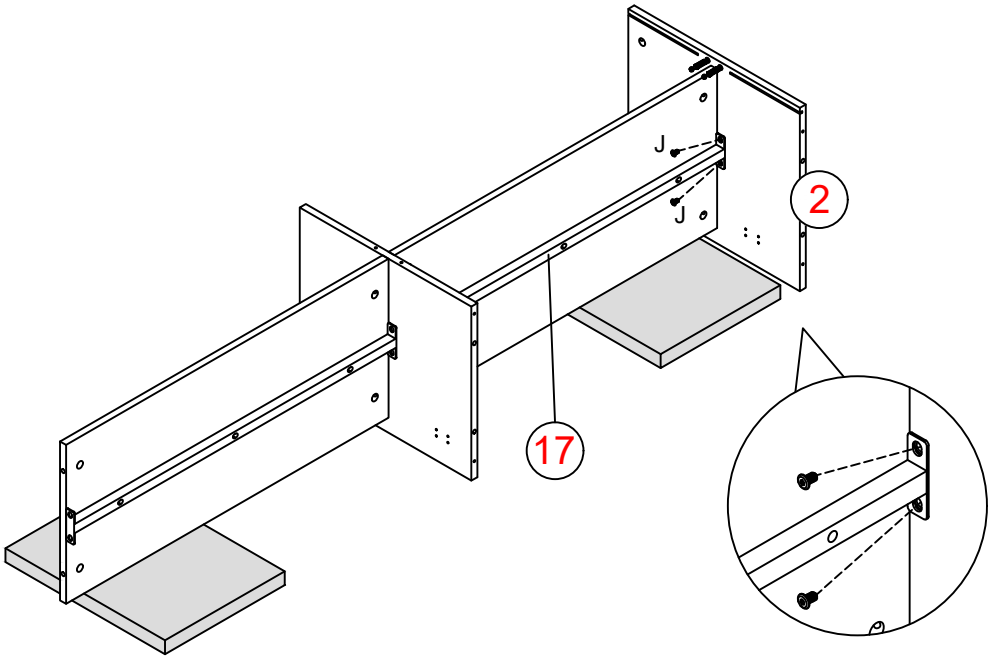

STEP 11

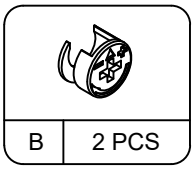

B	2 PCS

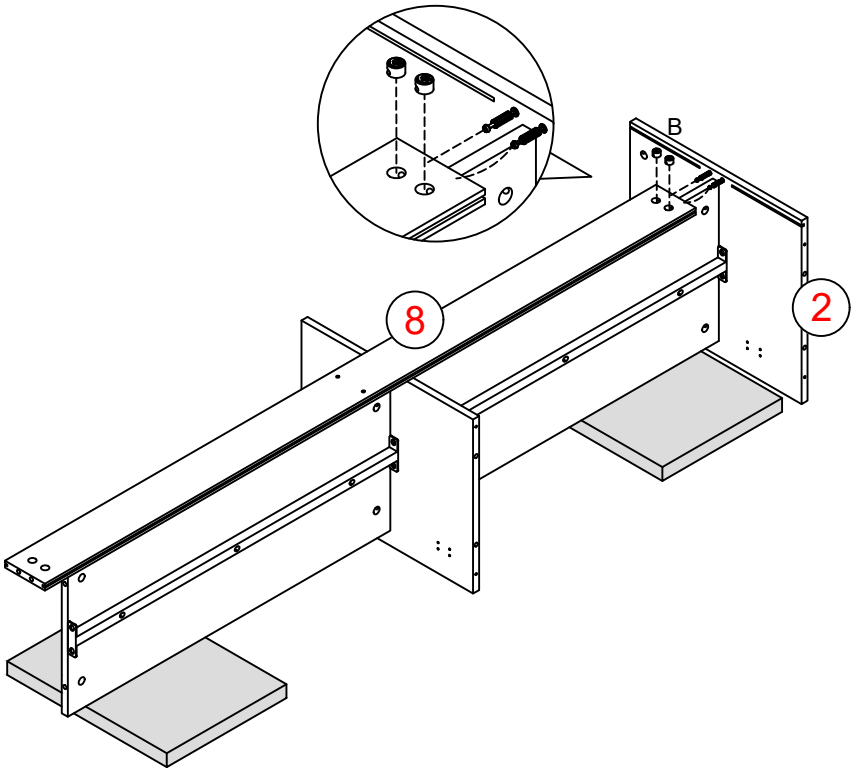

BOARD IDENTIFICATION

STEP 12

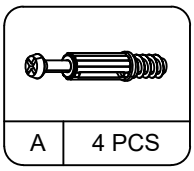

A	4 PCS

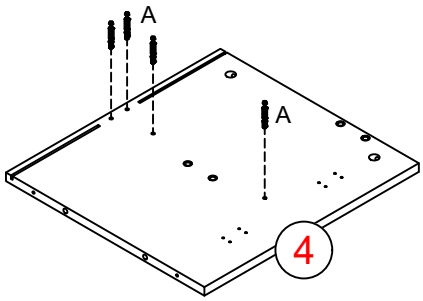

STEP 13

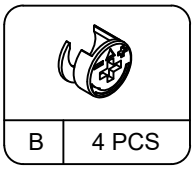

B	4 PCS

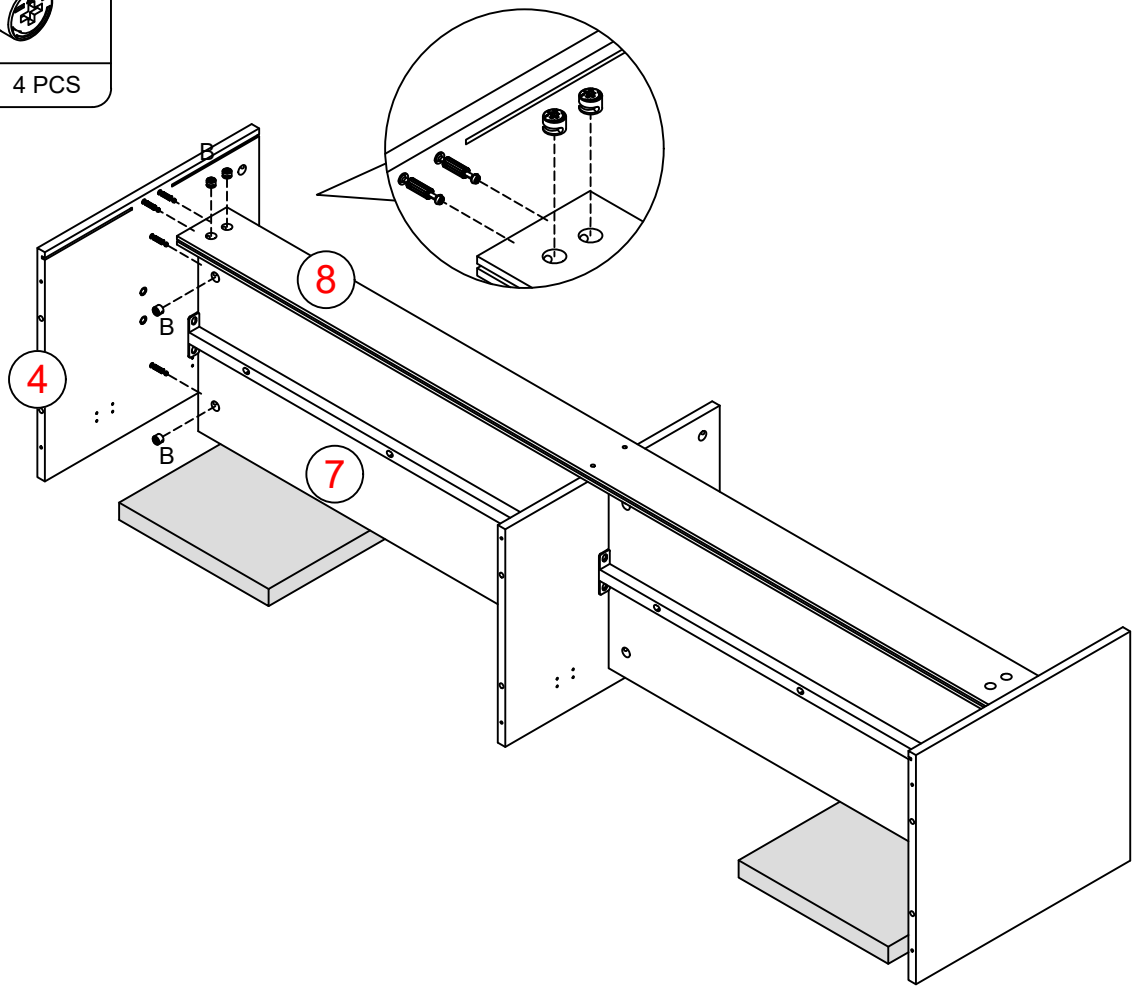

BOARD IDENTIFICATION

STEP 14

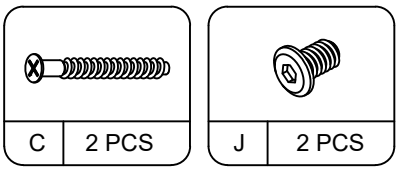

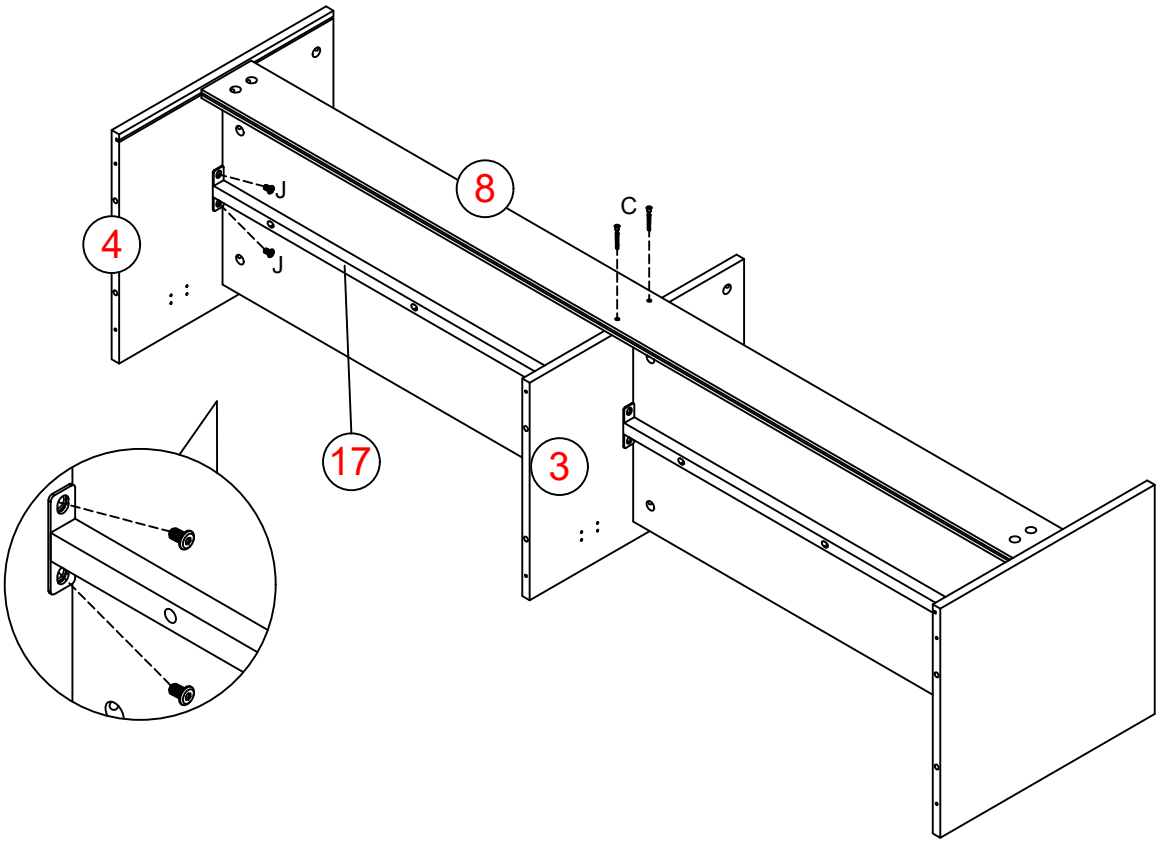

BOARD IDENTIFICATION

STEP 15

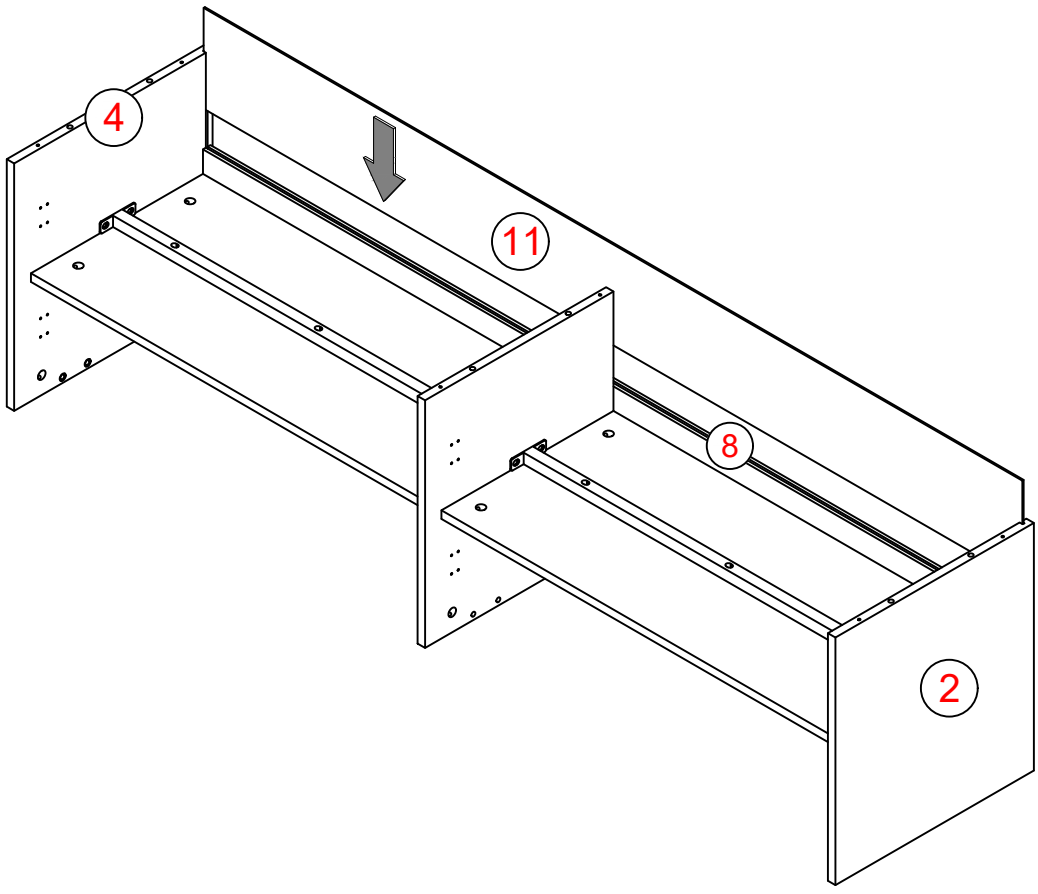

BOARD IDENTIFICATION

STEP 16

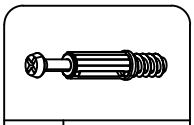

A	8 PCS

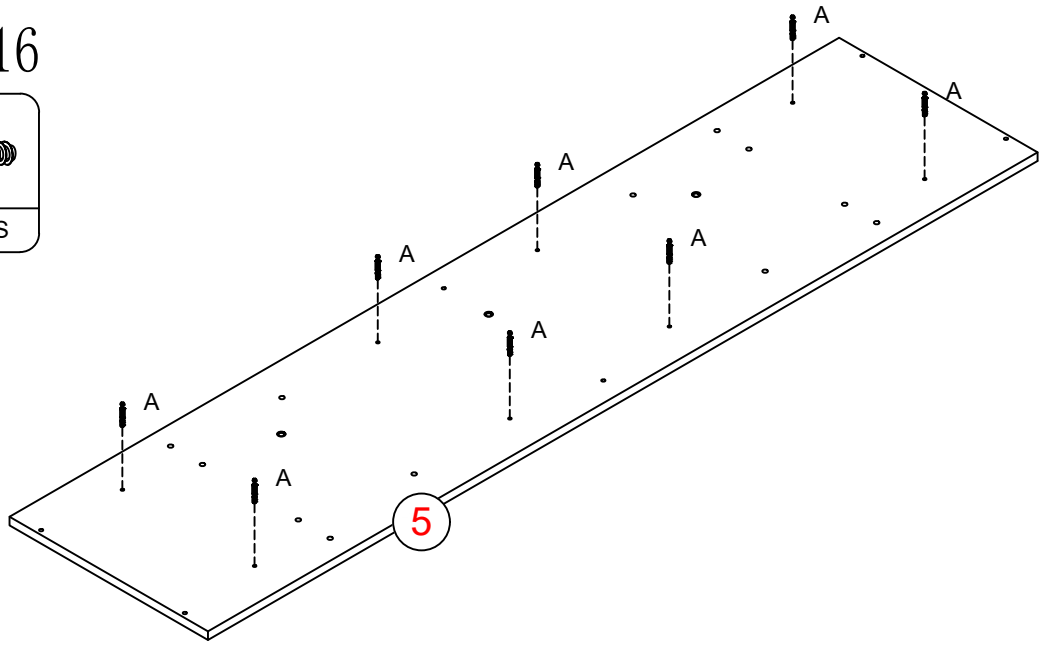

STEP 17



B	8 PCS

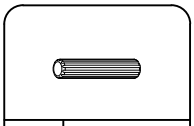

D	4 PCS

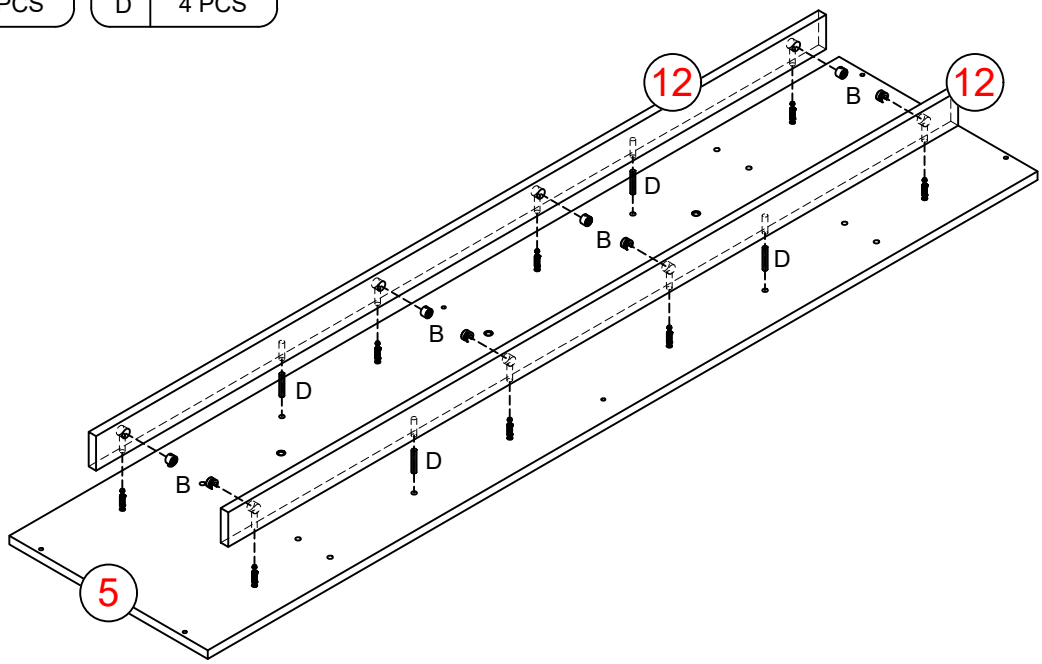

BOARD IDENTIFICATION

STEP 18

D	G	P	R
4 PCS	7 PCS	4 PCS	2 PCS

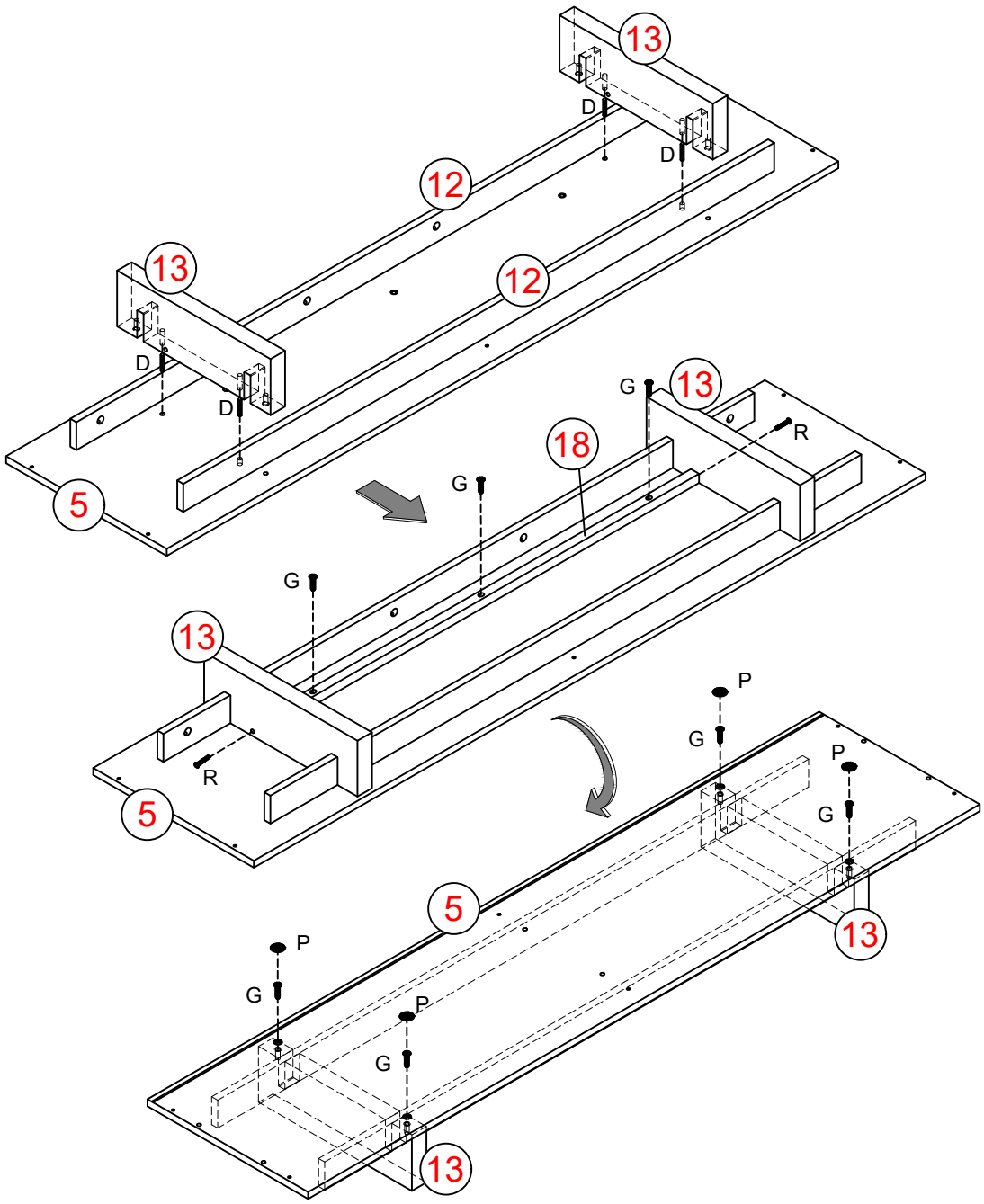

BOARD IDENTIFICATION

STEP 19

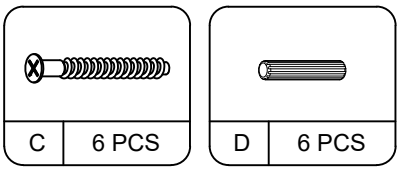

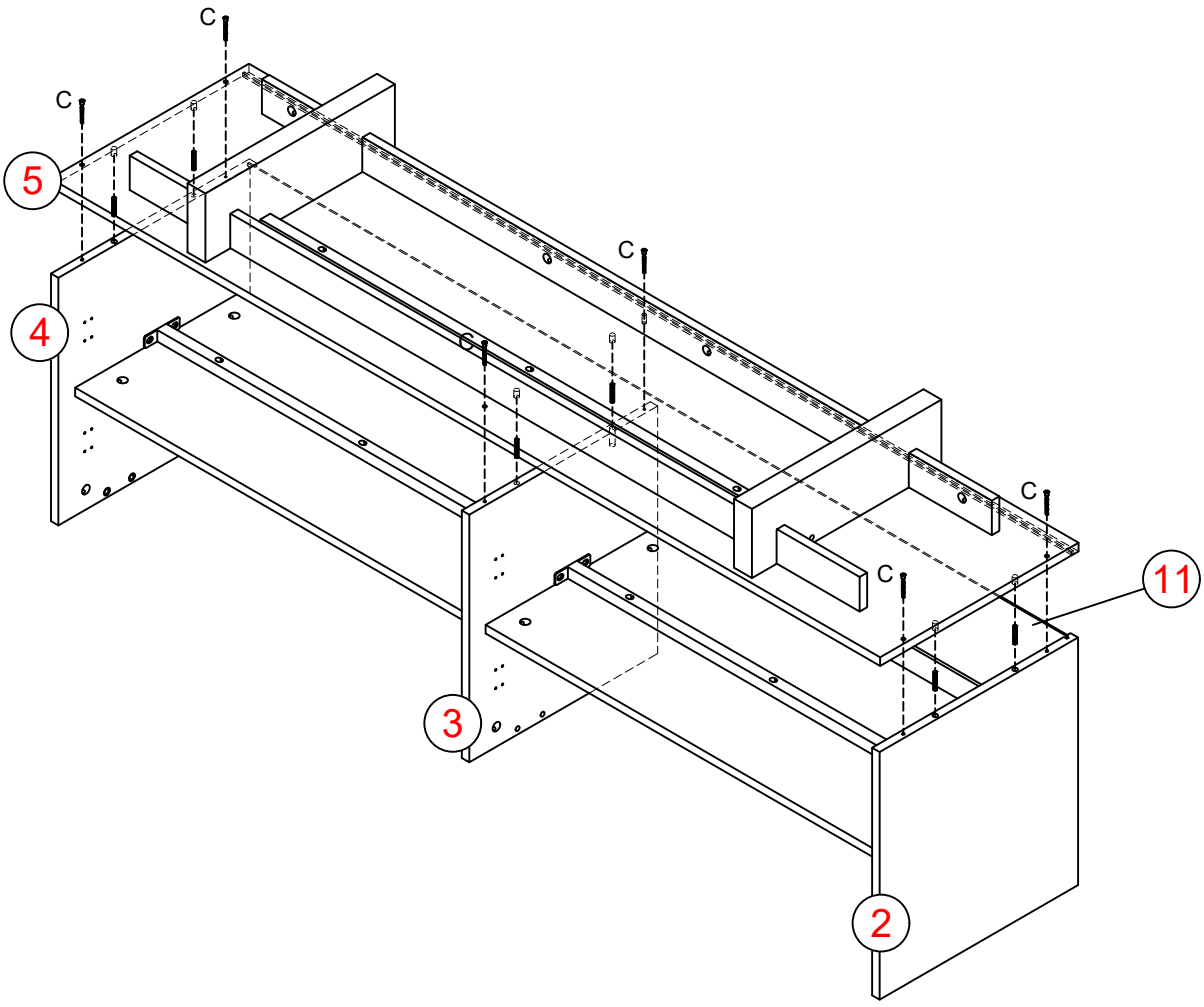

BOARD IDENTIFICATION

STEP 20

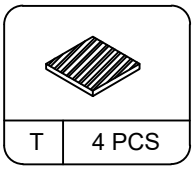

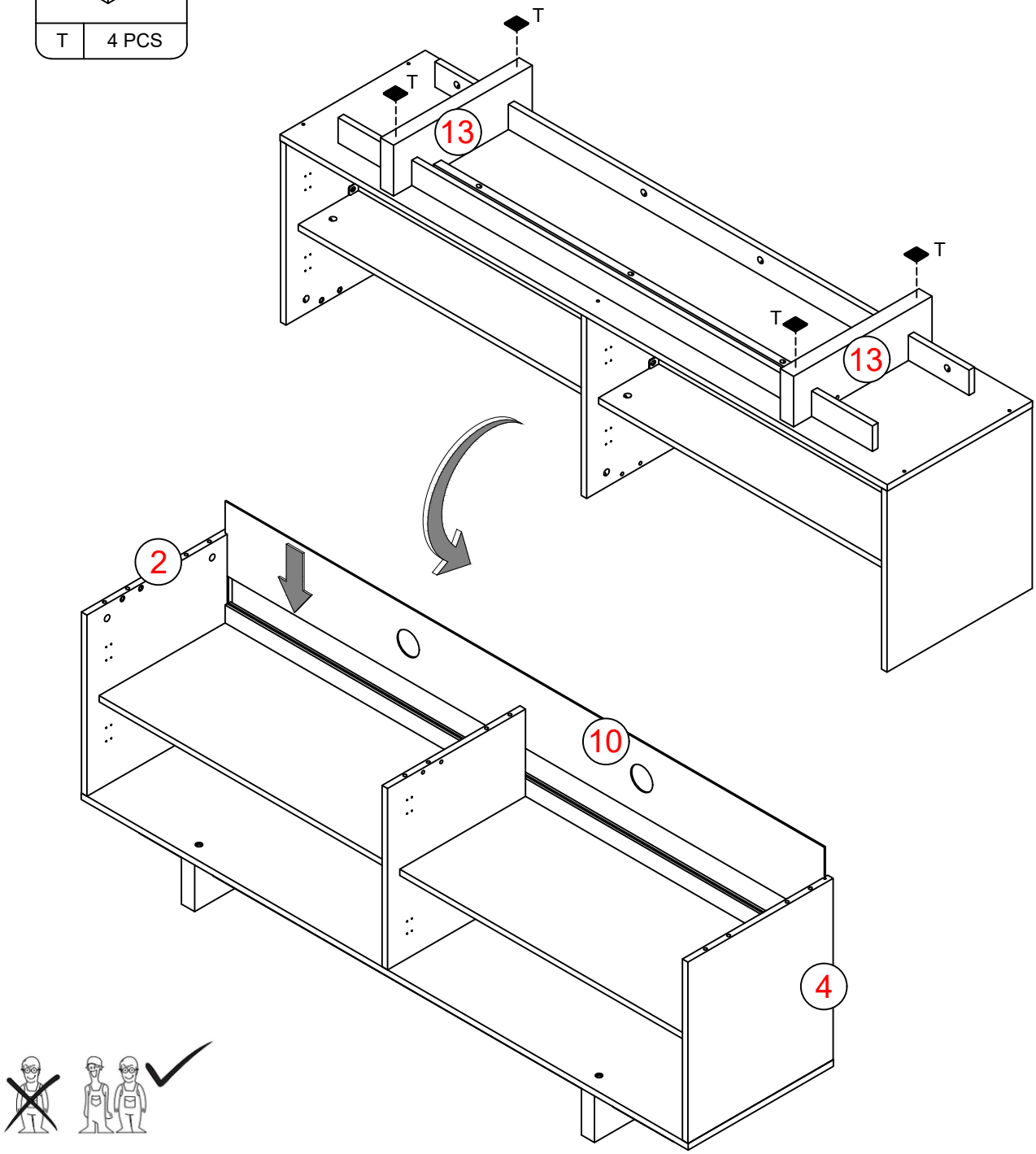

BOARD IDENTIFICATION

STEP 21

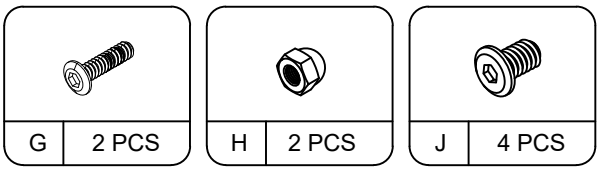

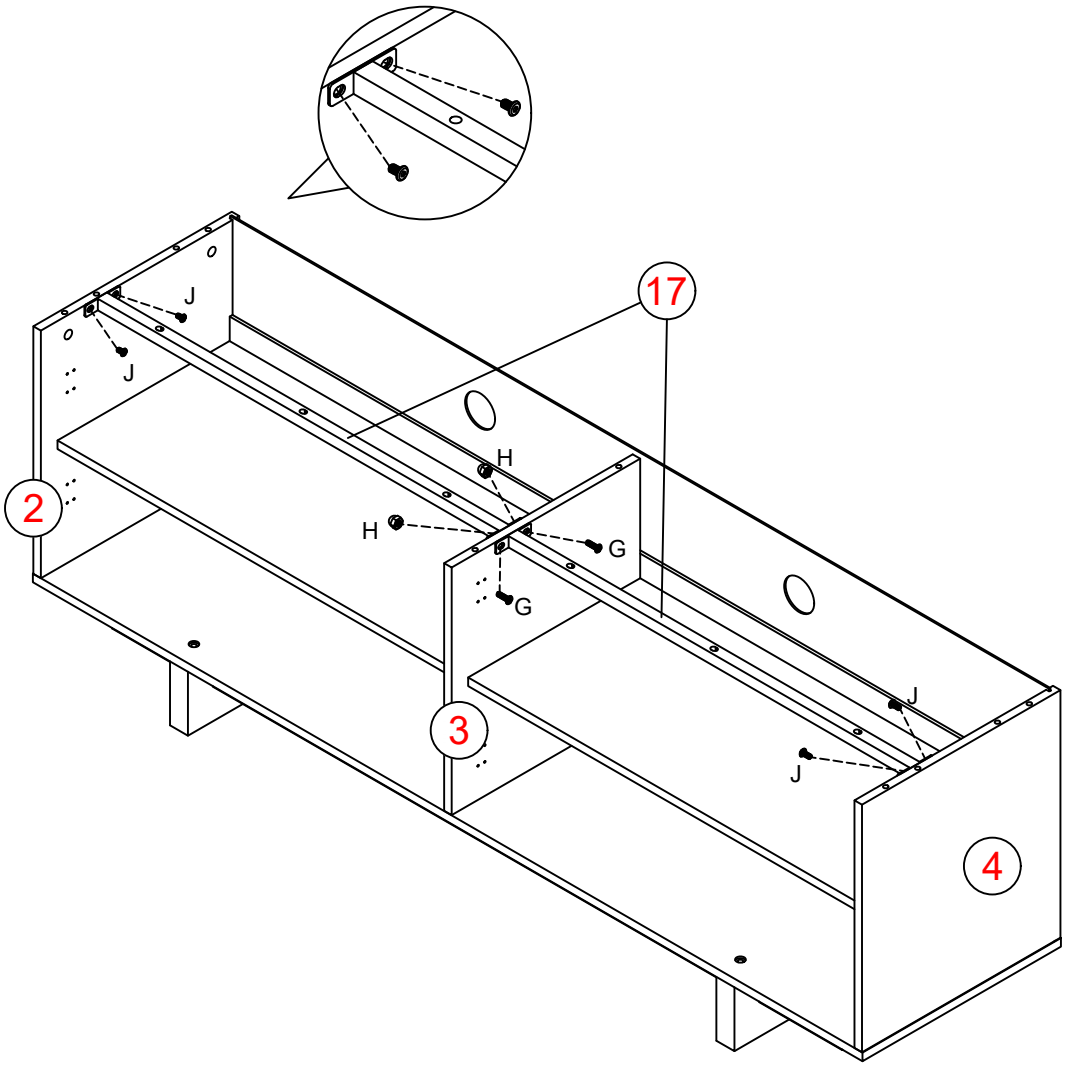

BOARD IDENTIFICATION

STEP 22

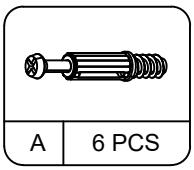

A	6 PCS

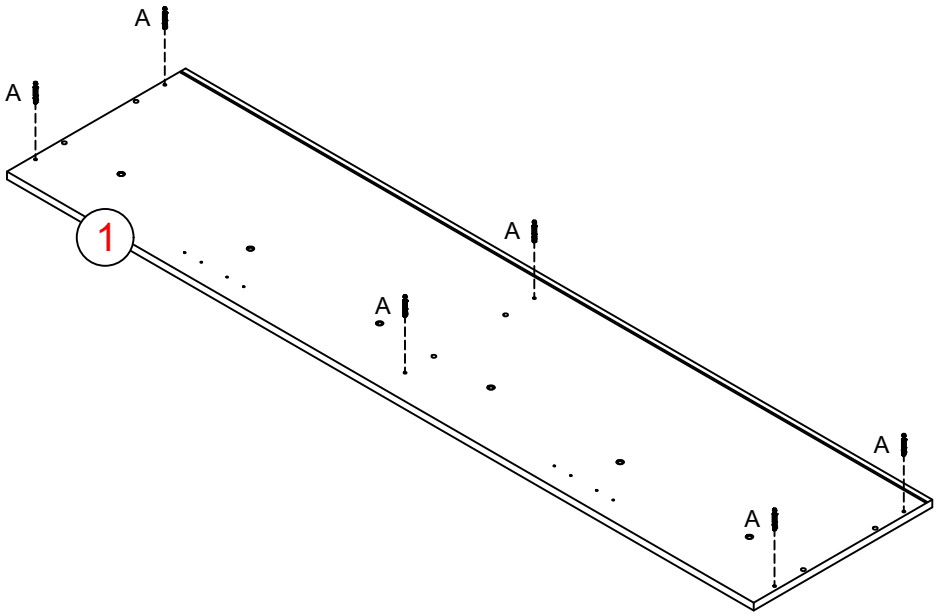

STEP 23

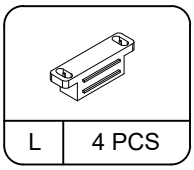

L	4 PCS

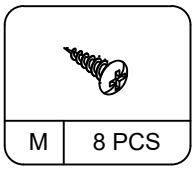

M	8 PCS

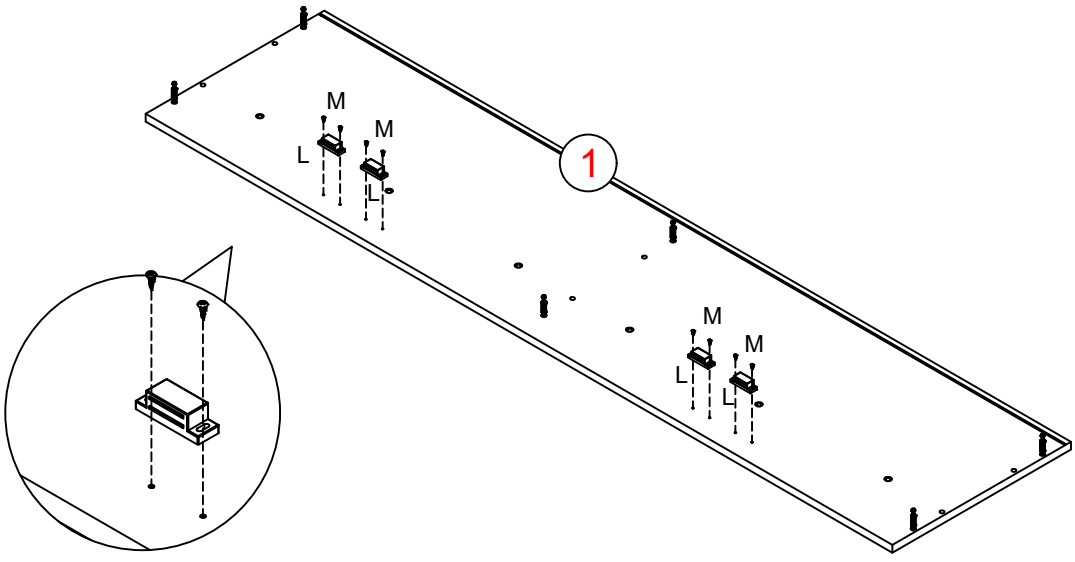

BOARD IDENTIFICATION

STEP 24

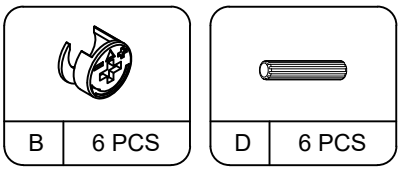

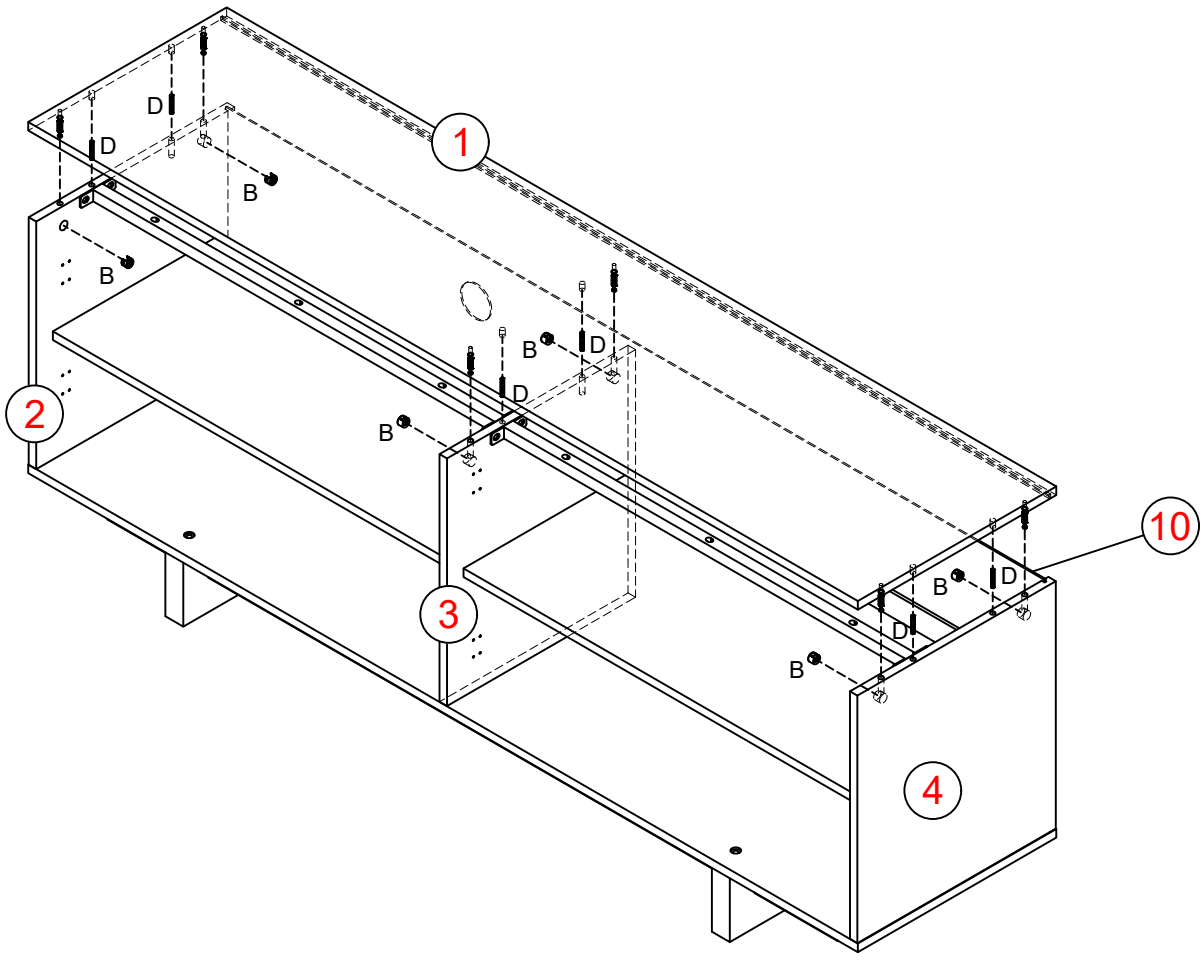

BOARD IDENTIFICATION

STEP 25

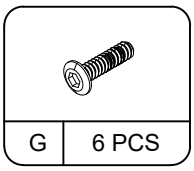

G	6 PCS

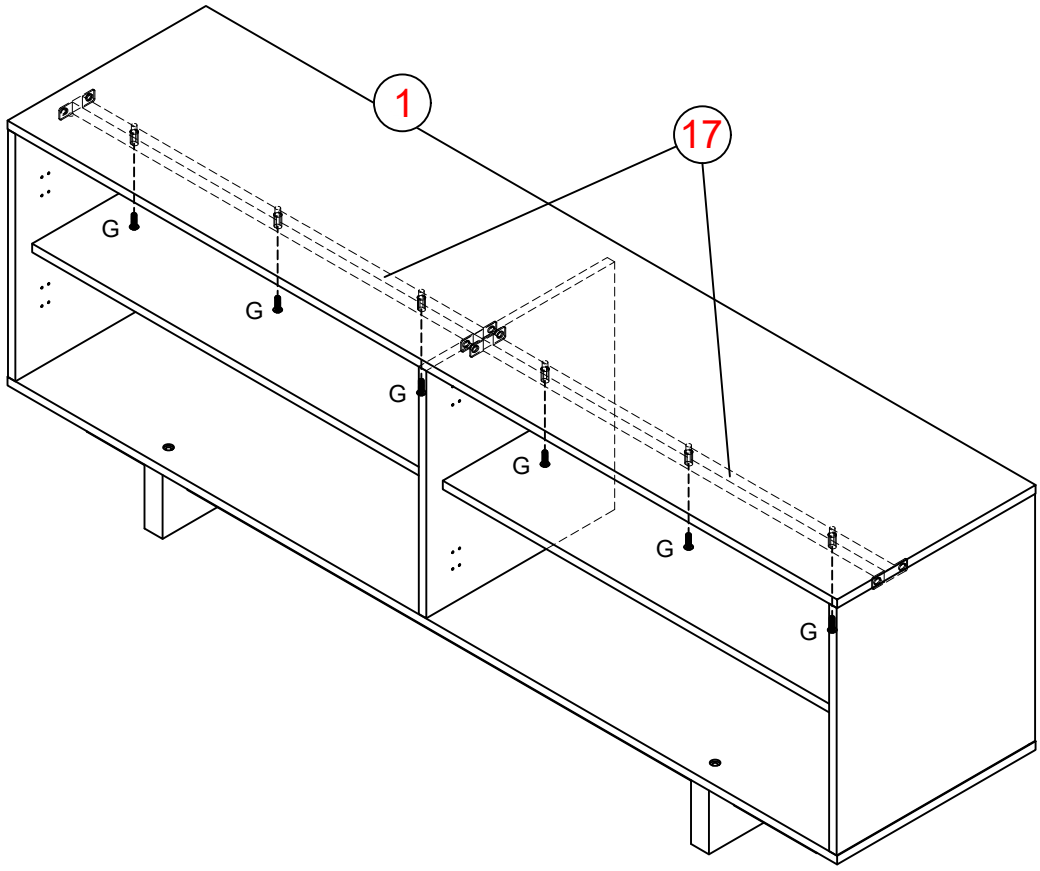

BOARD IDENTIFICATION

STEP 26

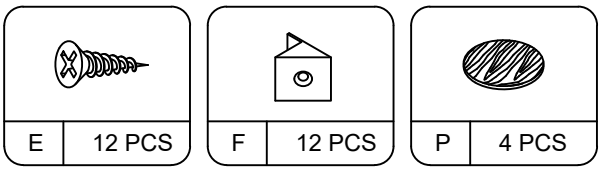

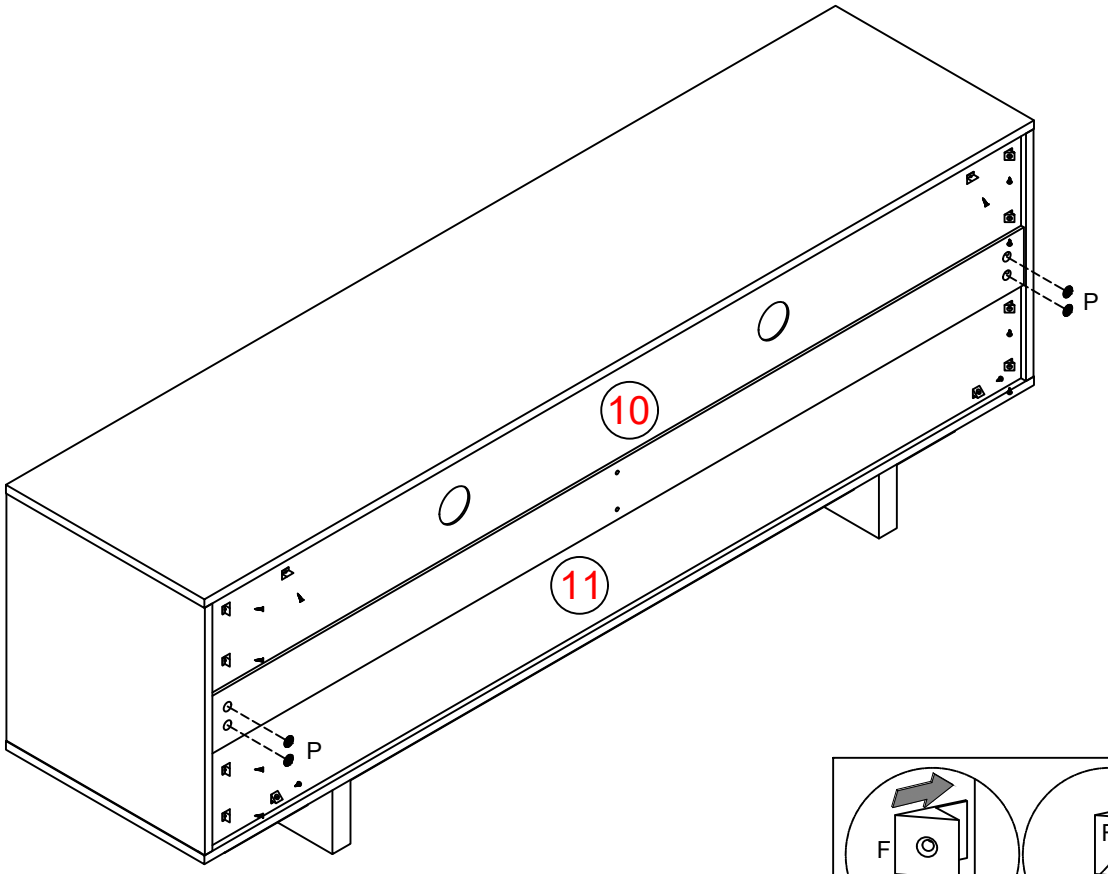

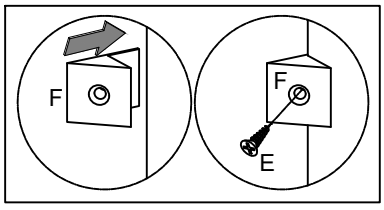

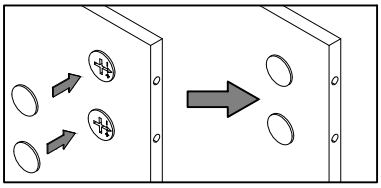

BOARD IDENTIFICATION

STEP 27

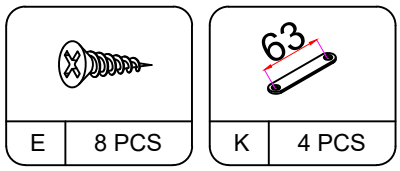

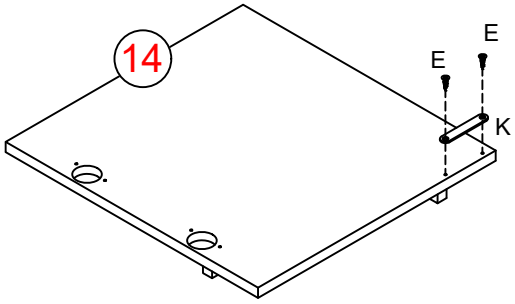

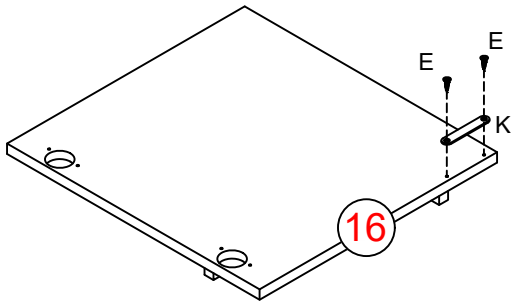

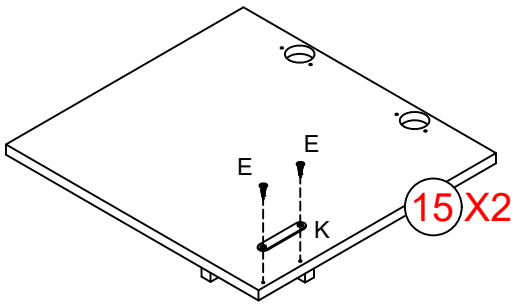

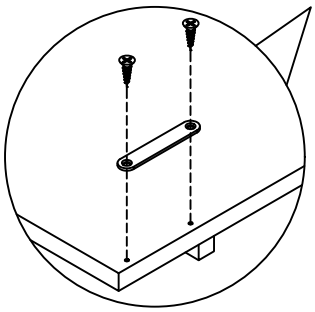

BOARD IDENTIFICATION

STEP 28

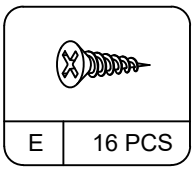

E	16 PCS

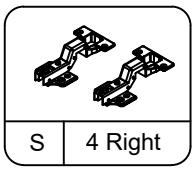

S	4 Right

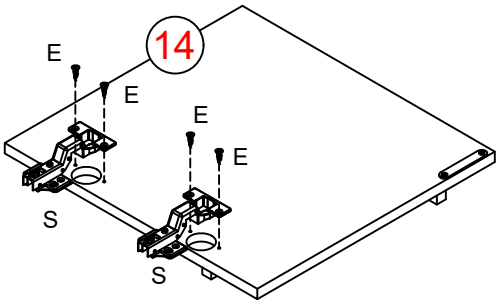

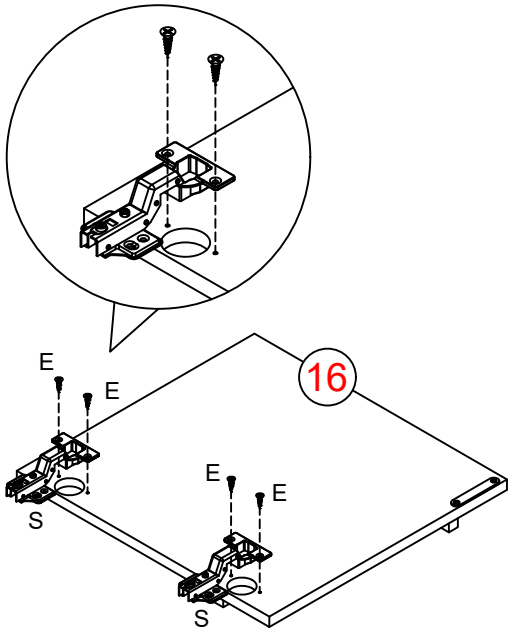

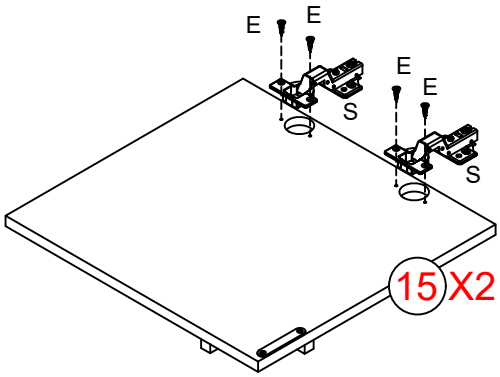

BOARD IDENTIFICATION

STEP 29

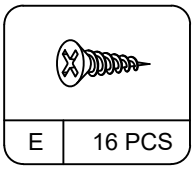

E	16 PCS

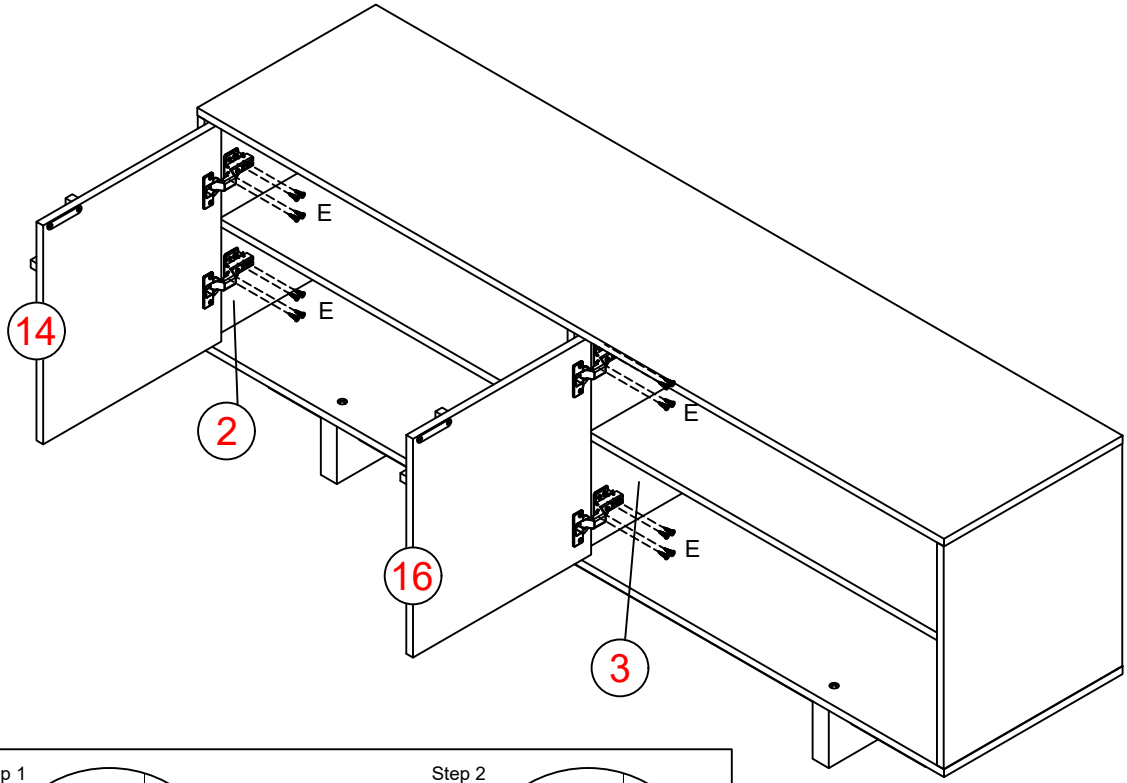

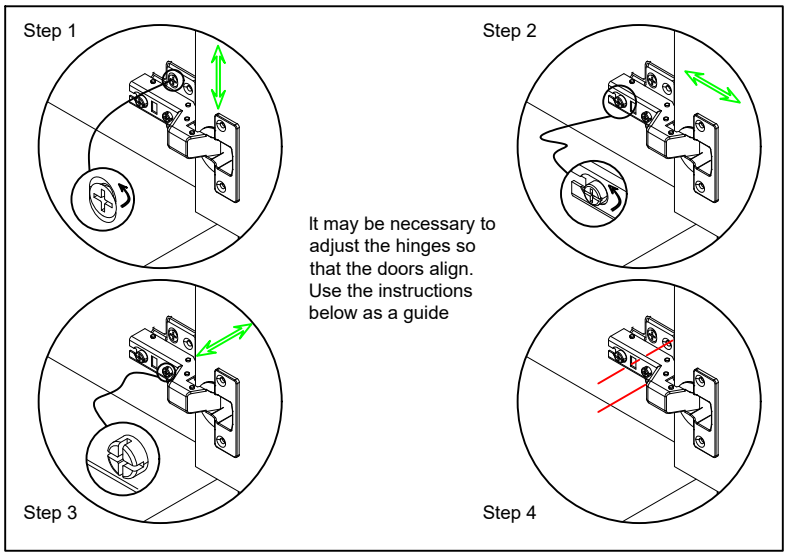

BOARD IDENTIFICATION

STEP 30

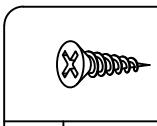

E	16 PCS

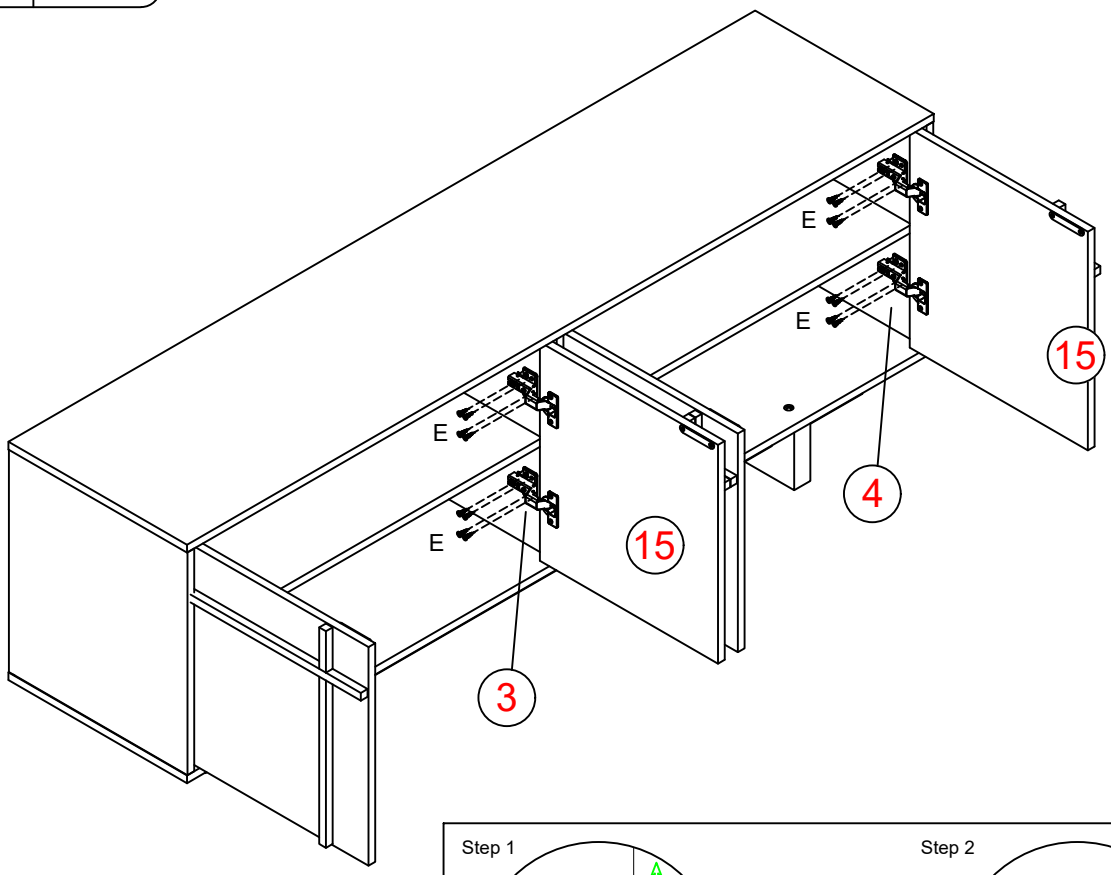

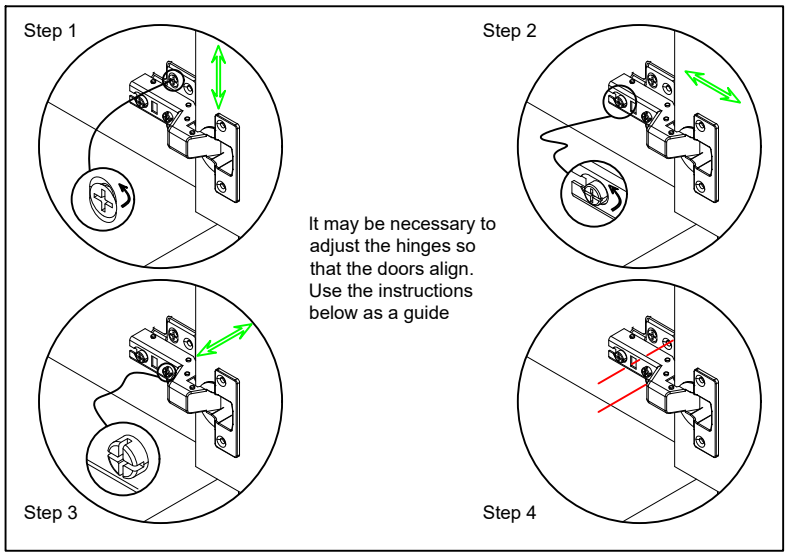

BOARD IDENTIFICATION

STEP 31

