SERA
Bathroom Designs

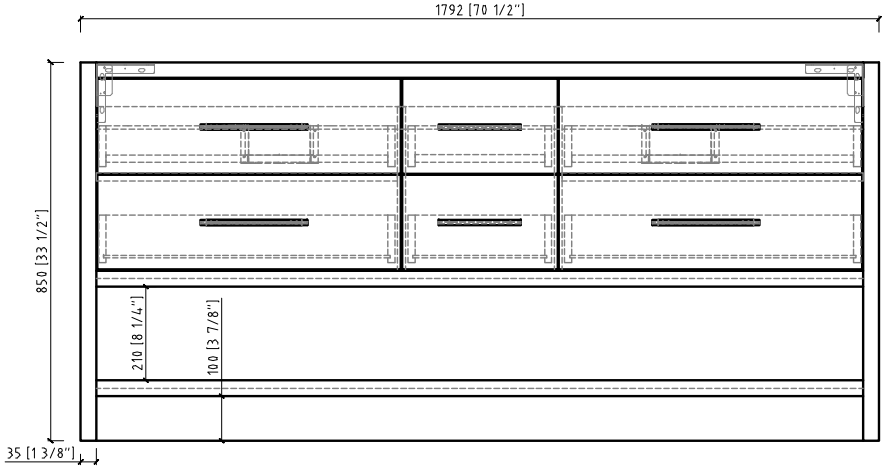

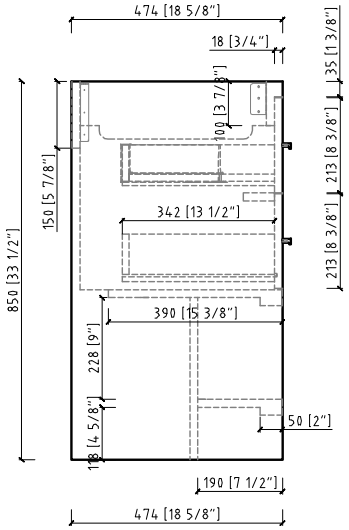

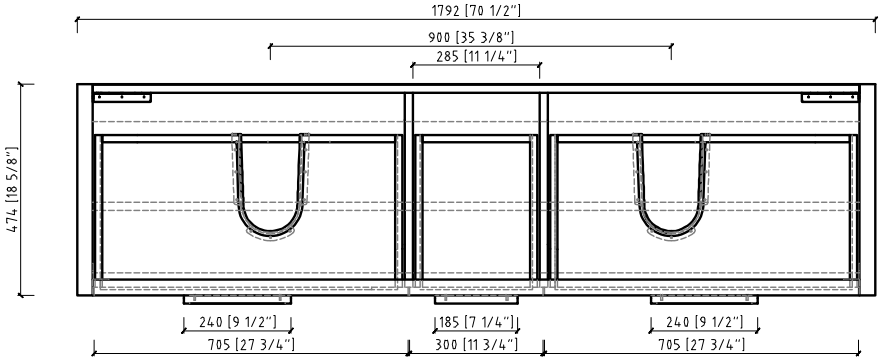

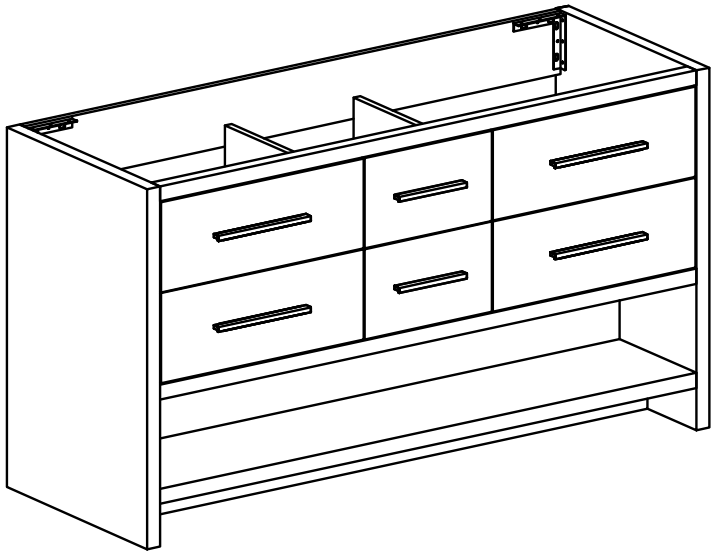
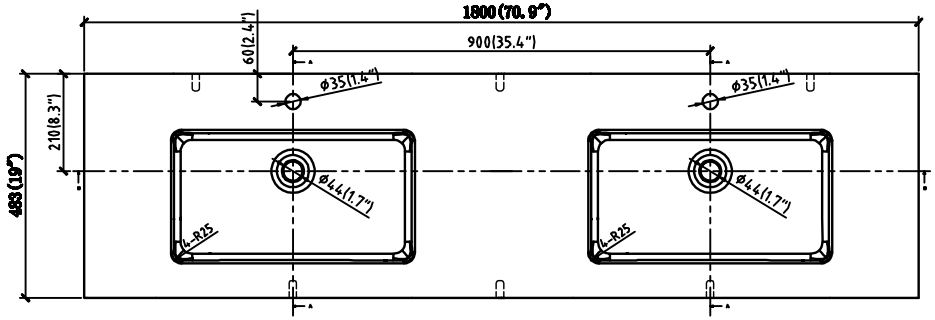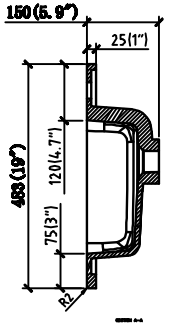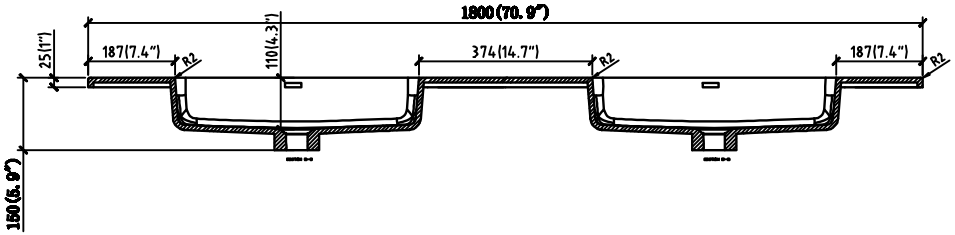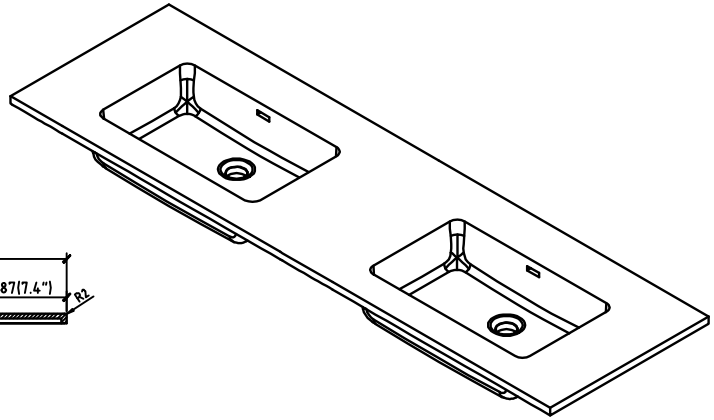
SERA
Bathroom Designs