ASSEMBLY INSTRUCTION

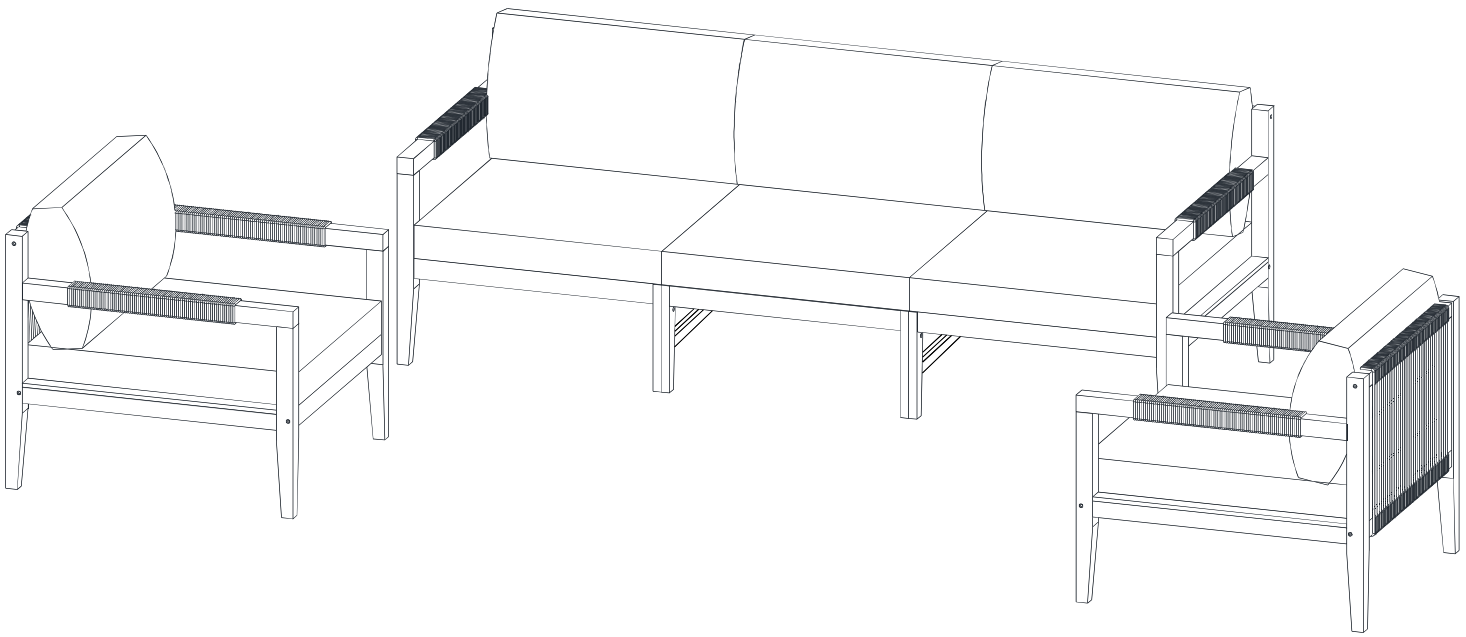

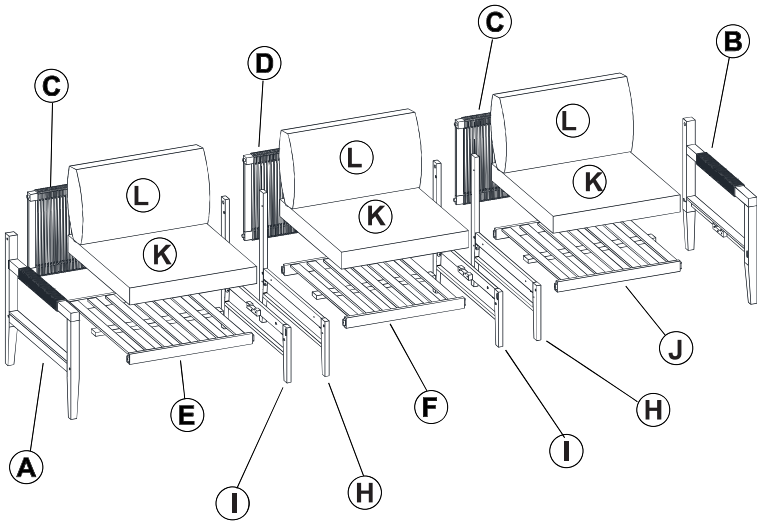

X2

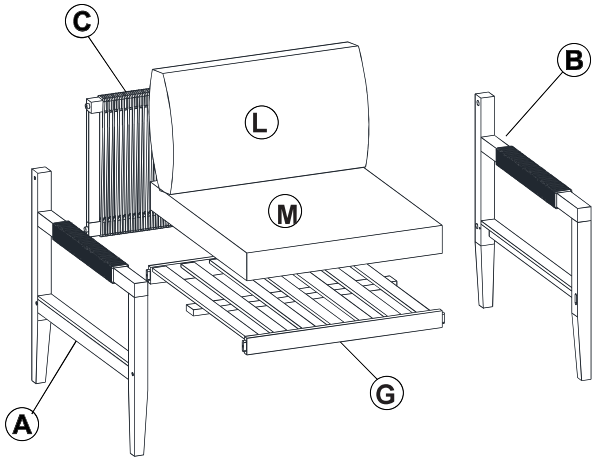

Notice :

1. 50% Tighten before fixing all screws, Allen wrench is recommended instead of an electric drill.
2. Place the item on a flat ground to adjust and make sure it remains stable.
3. Tighten up all screws with tools gradually.
4. If the screws are not aligned with holes during assembly, please loosen all the other screws to 50% and continue the assembly process.
5. If the item is not stable, please loosen all the screws, adjust it on a flat ground and tighten up all screws again.
6. Note : If one or some screws are fully tightened during assembly, chances are the others will not be aligned with holes. In addition, all the holes are designed to be relatively larger to provide more space for the adjustment of the screws.

Part List :

A 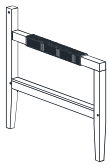 Arm Right (3pcs)	B 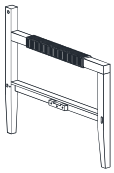 Arm Left (3pcs)	C 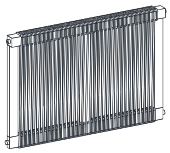 Back Right+Left (4pcs)	D 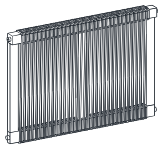 Back Middle (1pc)
E 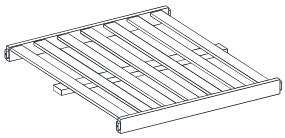 Seat Right (1pcs)	J 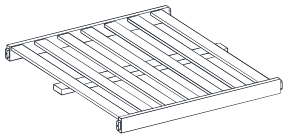 Seat Left (1pcs)	F 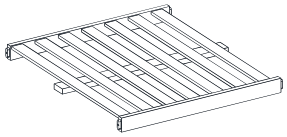 Seat Middle (1pc)	G 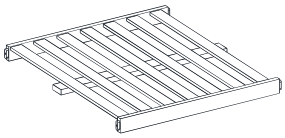 Seat single (2pcs)
H 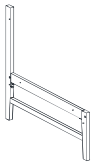 Leg Right (2pcs)	I 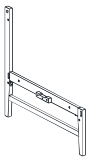 Leg Left (2pcs)	K 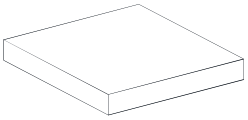 Seat Cushion Triple (3pcs)	L 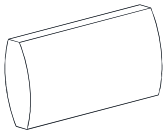 Back cushion (5pcs)
M 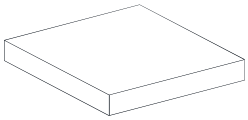 Seat Cushion Single (2pcs)	N 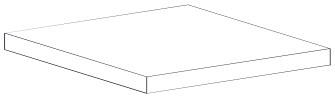 Outside Seat Cushion Triple (3pcs)	O 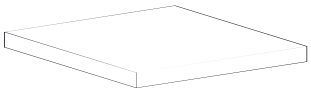 Outside Seat Cushion Single (2pcs)	

Hardware List：

1  Screw M7*90mm (18 PCS) extra 1 pc	2  Screw M7*60mm (12 PCS) extra 1 pc	3  Bolts M6* 40mm (6PCS) extra 1 pc	4  Cap (6 PCS) extra 1 pc
5  Allen Key (2 pc)			

CARTON CONTENT

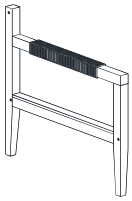

A X 1

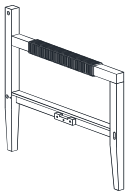

B X 2

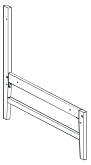

H X2

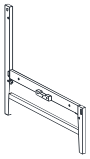

I X 2

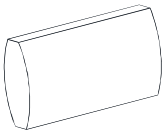

L X 3



Hardware

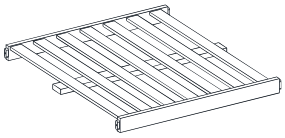

E X 1

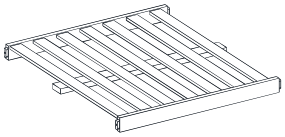

J X 1

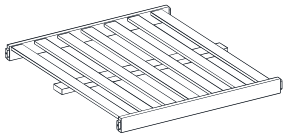

G X 2

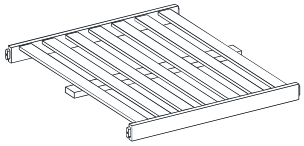

F X 1

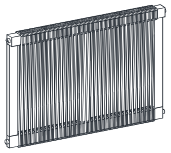

D X 1

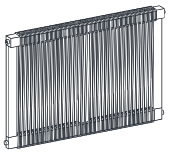

C X 4

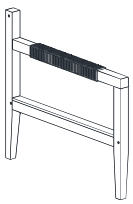

A X 2

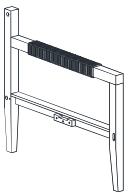

B X 1

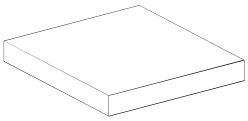

K X 3

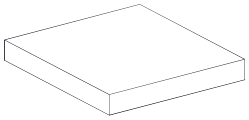

M X 2

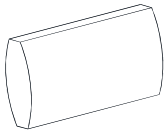

L X2

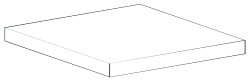

N X 3

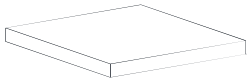

O X 2

ASSEMBLY INSTRUCTION

STEP 1

A x 1
C x 1
① x 1

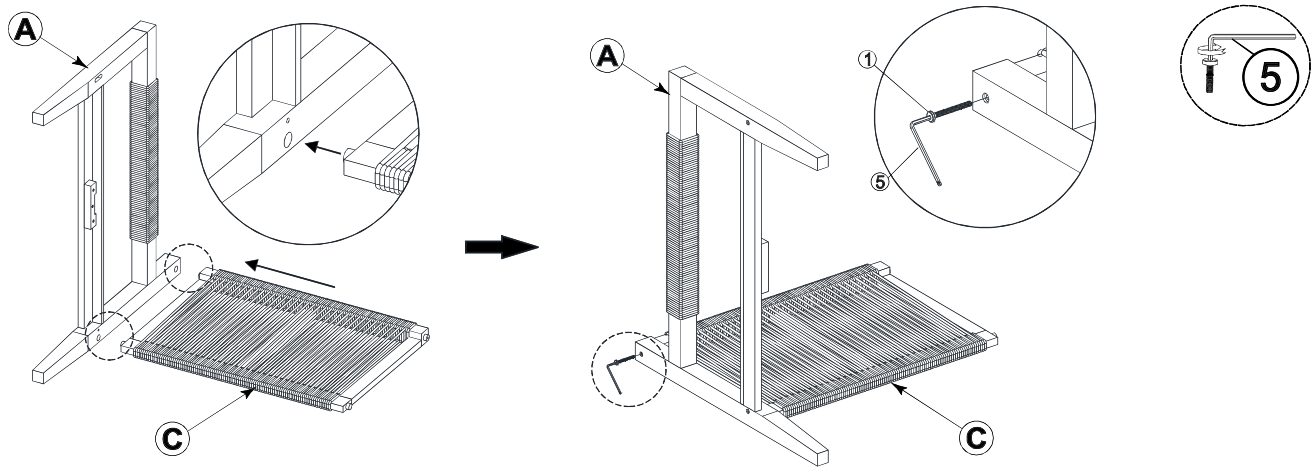

STEP 2

E x 1
① x 2

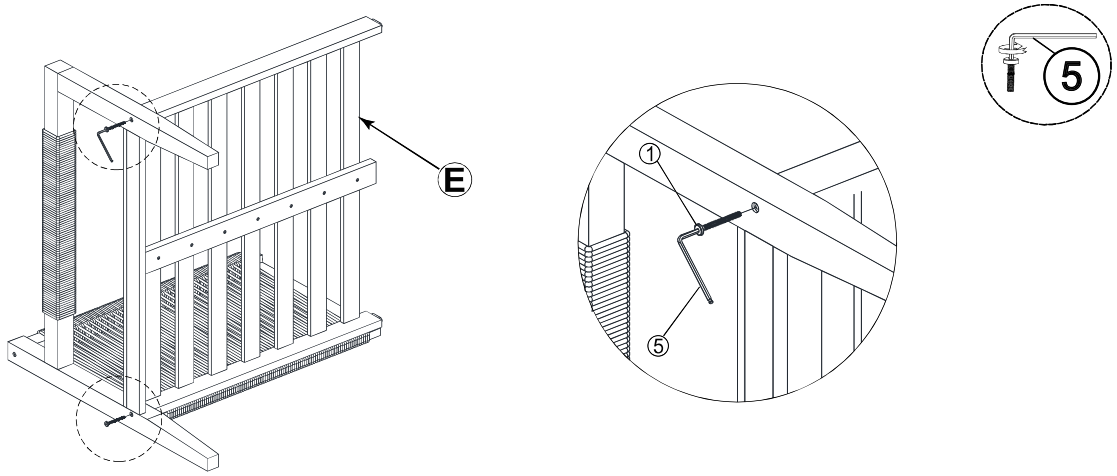

ASSEMBLY INSTRUCTION

STEP 3

Ⅰ	x 1
②	x 3

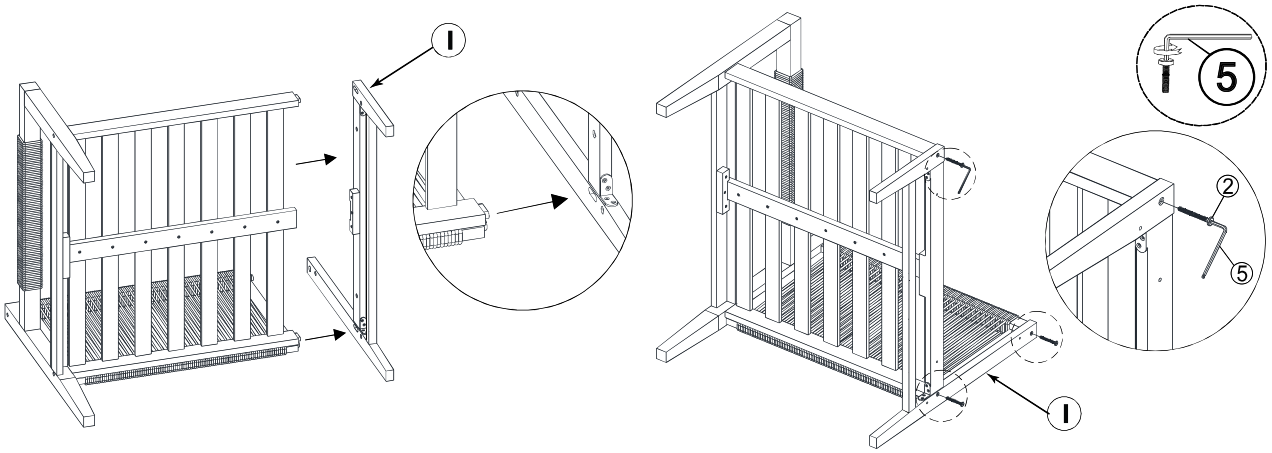

STEP 4

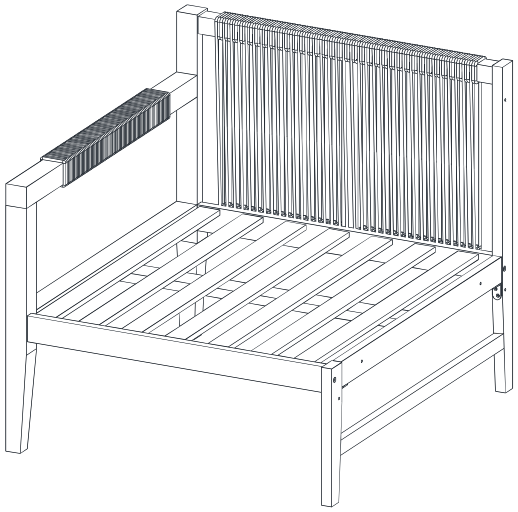

100%



ASSEMBLY INSTRUCTION

STEP 5

B x 1
C x 1
① x 1

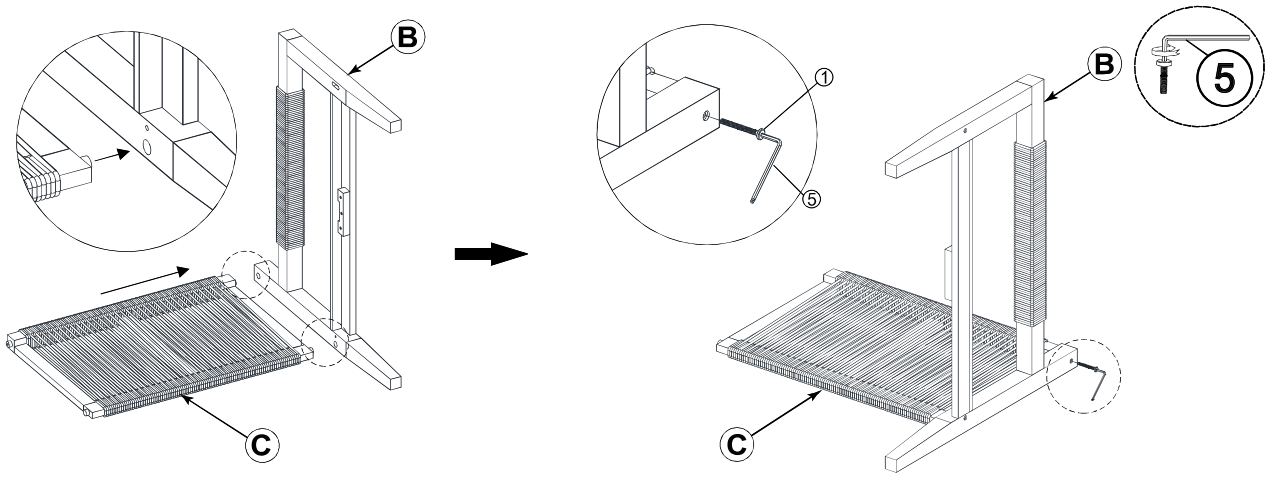

STEP 6

J x 1
① x 2

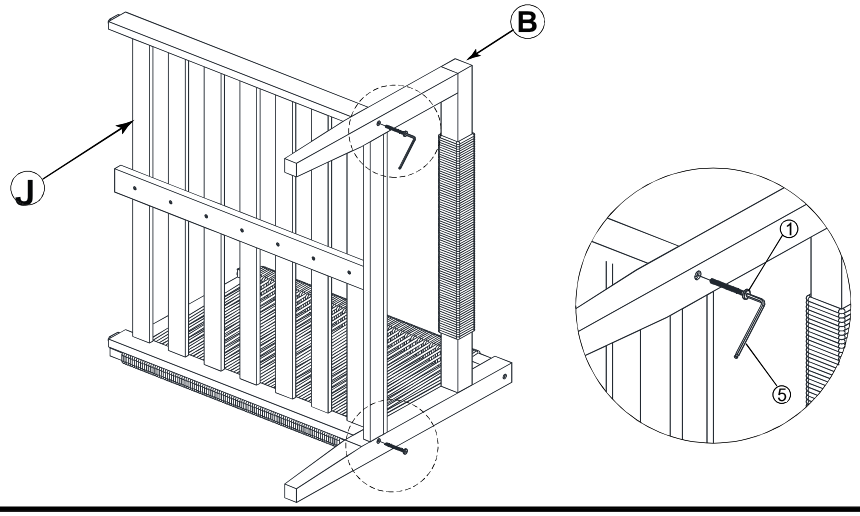

ASSEMBLY INSTRUCTION

STEP 7

H x 1
② x 3

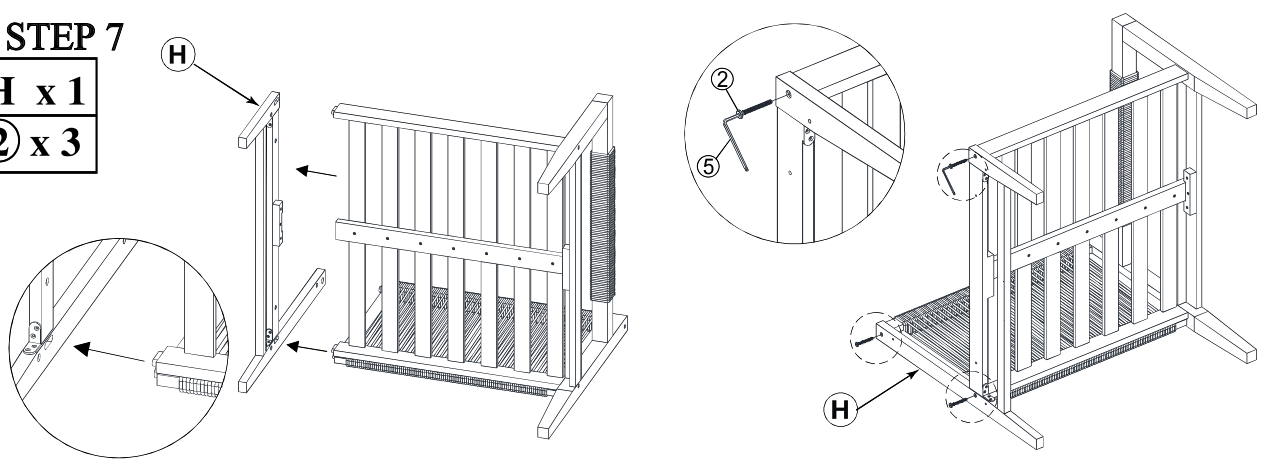



STEP 8

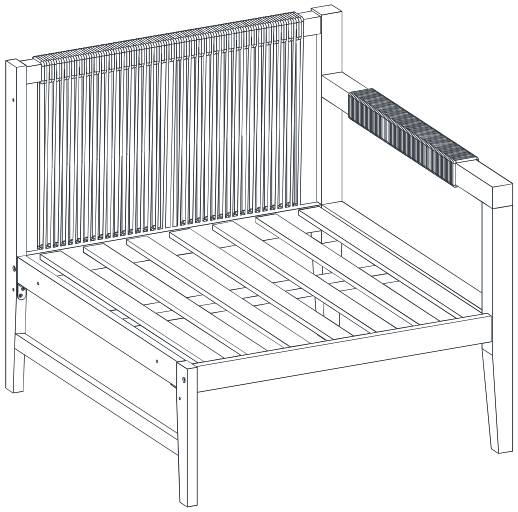

100%



ASSEMBLY INSTRUCTION

STEP 9

H x 1
D x 1
② x 1

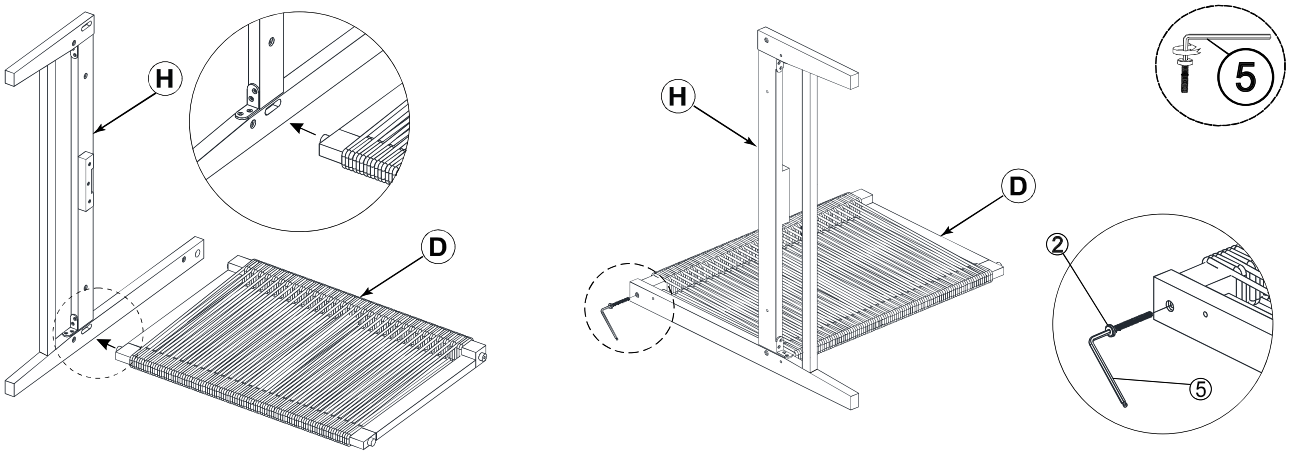

STEP 10

F x 1
② x 2

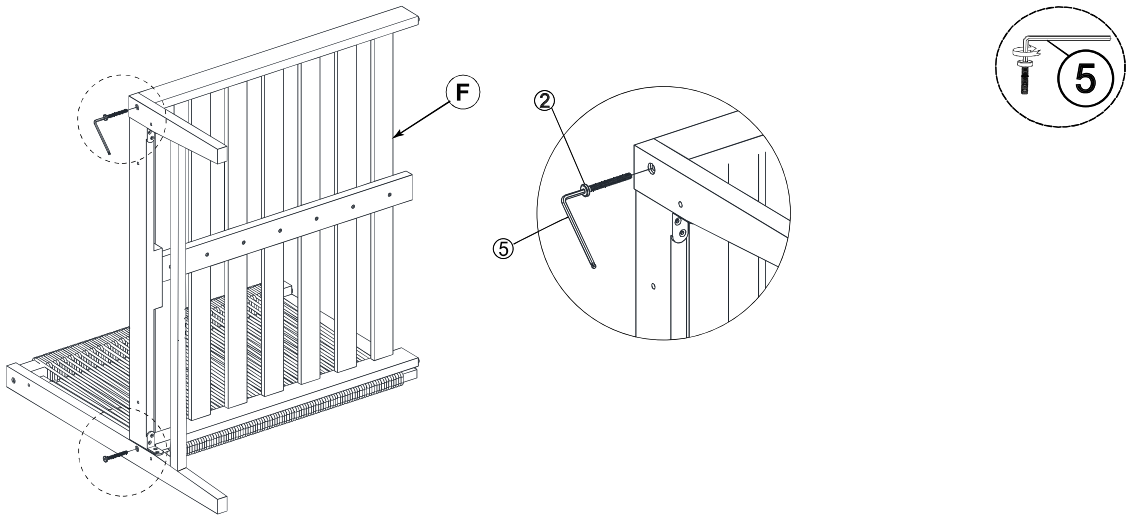

ASSEMBLY INSTRUCTION

STEP 11

Ⅰ x 1
② x 3

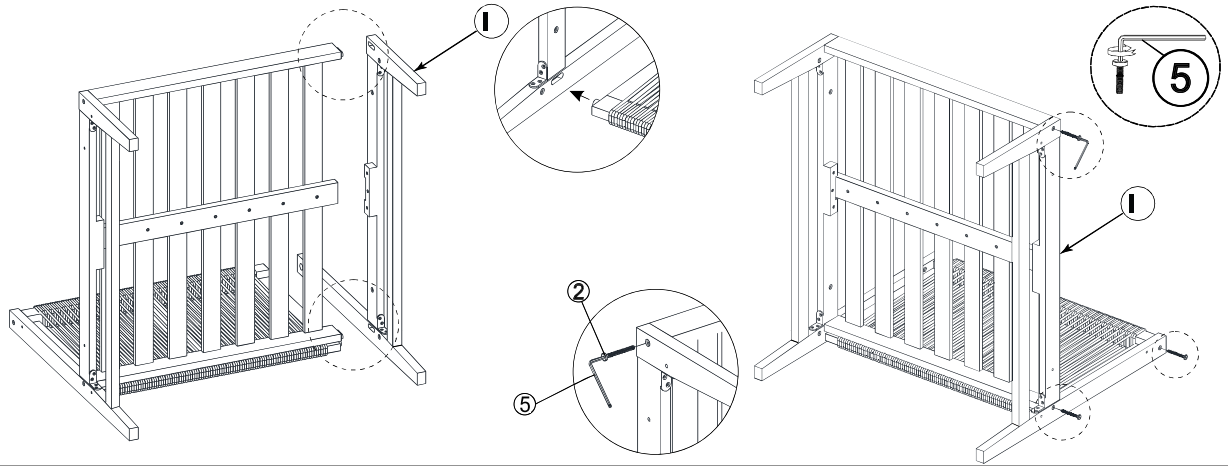

STEP 12

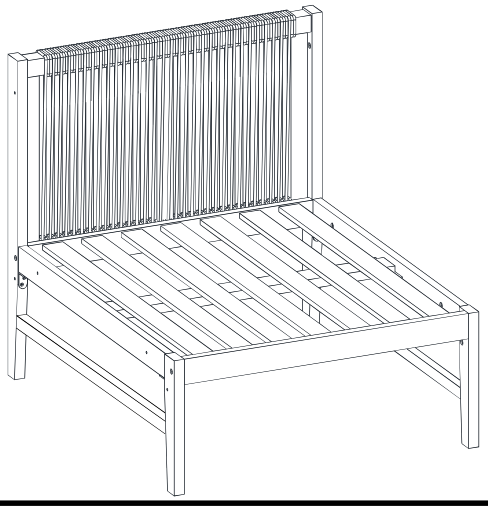

100%



ASSEMBLY INSTRUCTION

STEP 13

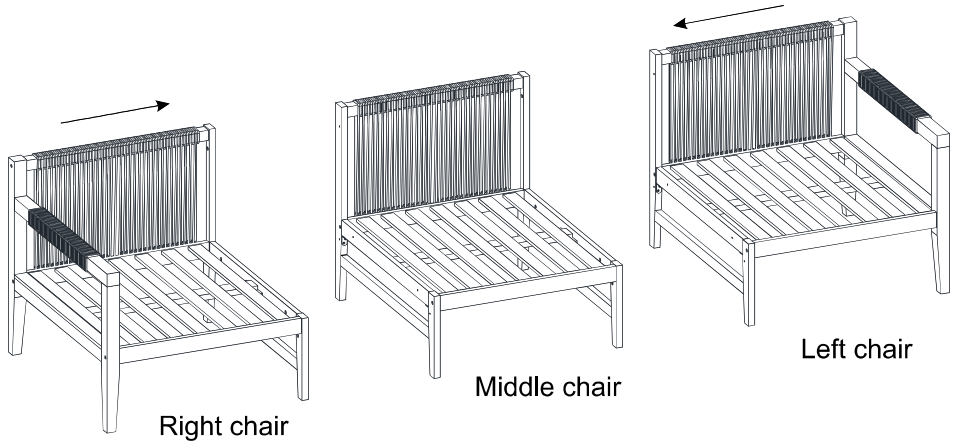

STEP 14

③ x 6

④ x 6

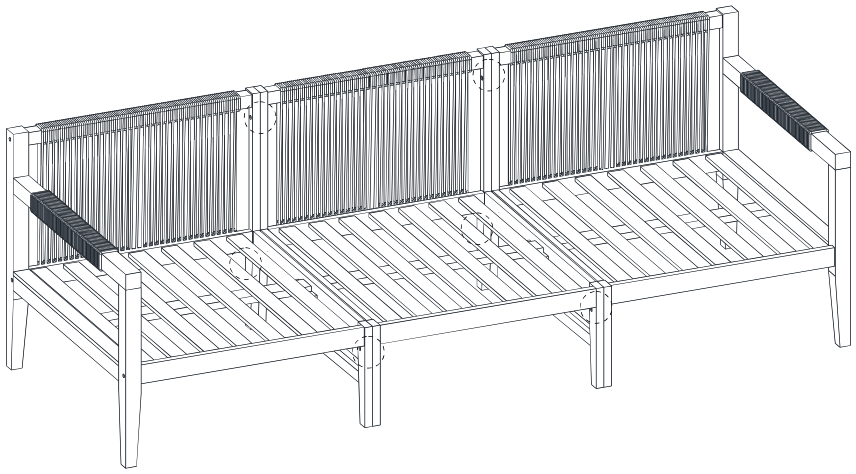

100%



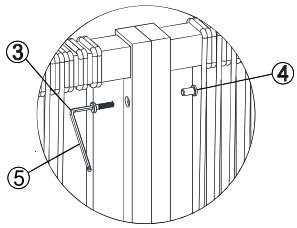

ASSEMBLY INSTRUCTION

STEP 15

X3

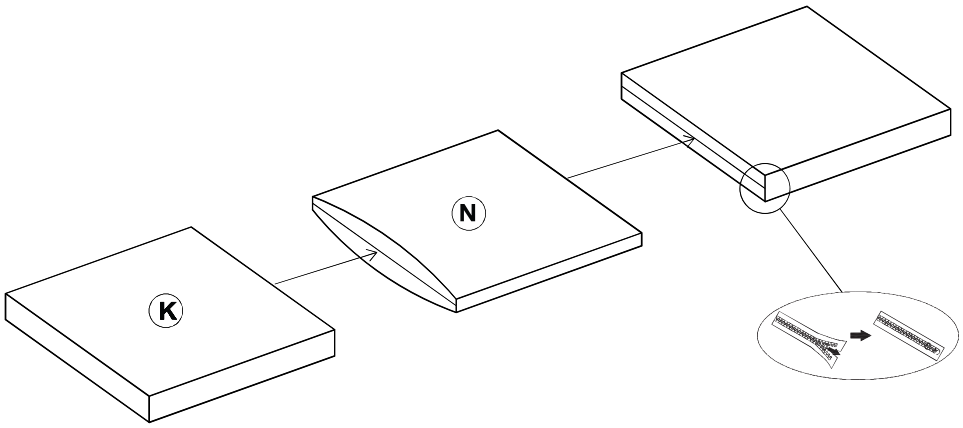

STEP 16

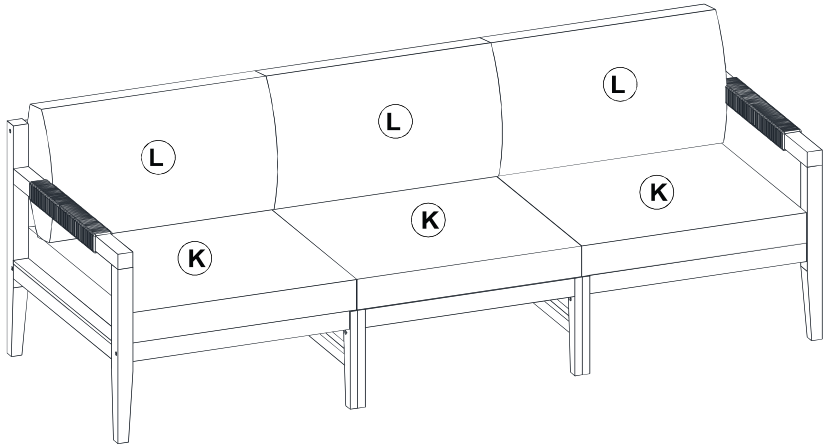

ASSEMBLY INSTRUCTION

STEP 17

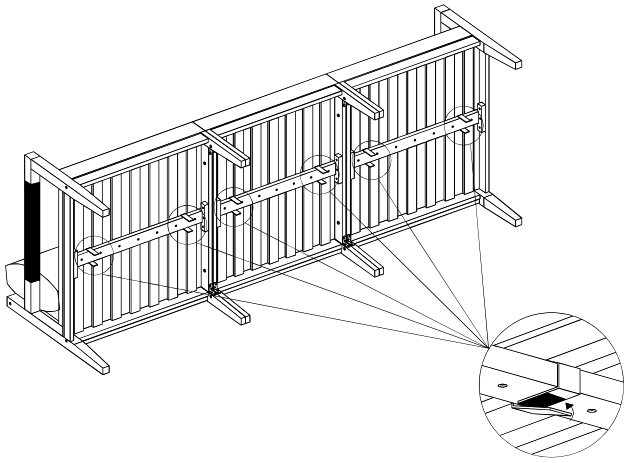

STEP 18

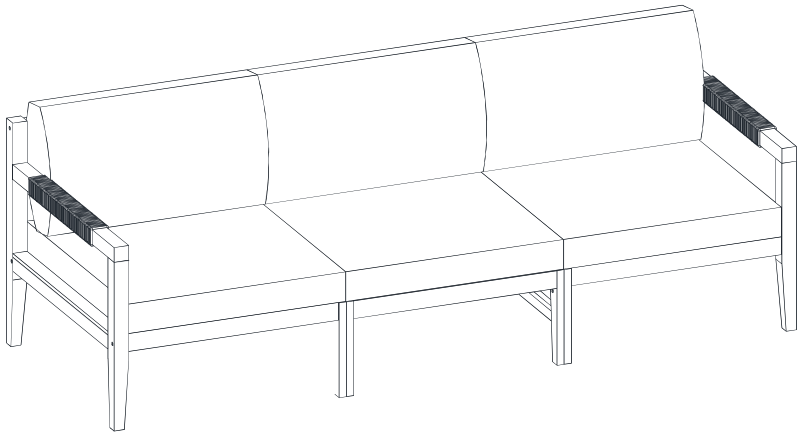

ASSEMBLY INSTRUCTION

STEP 19

A x 1
C x 1
① x 1

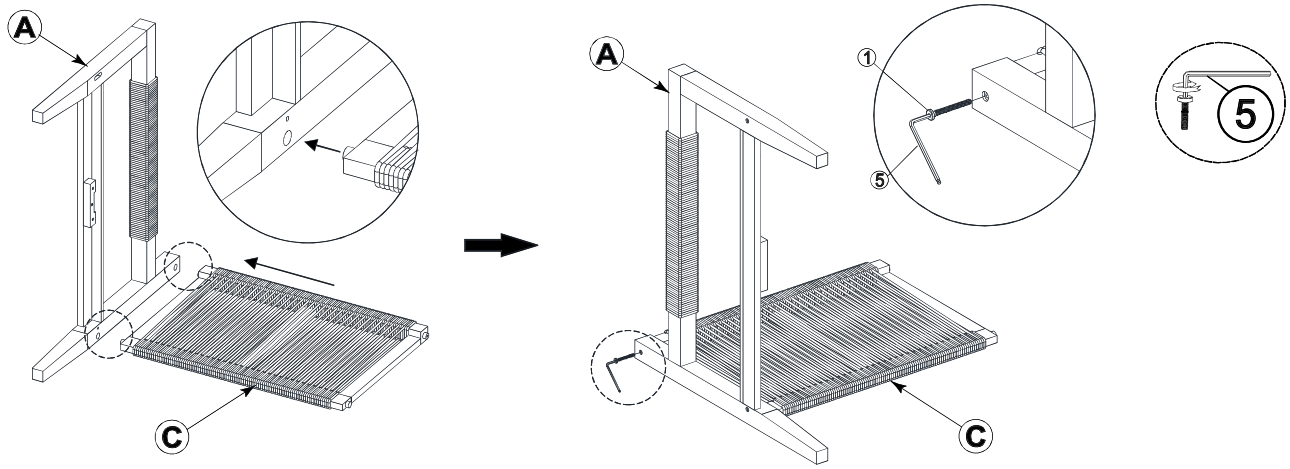

X2

STEP 20

G x 1
① x 2

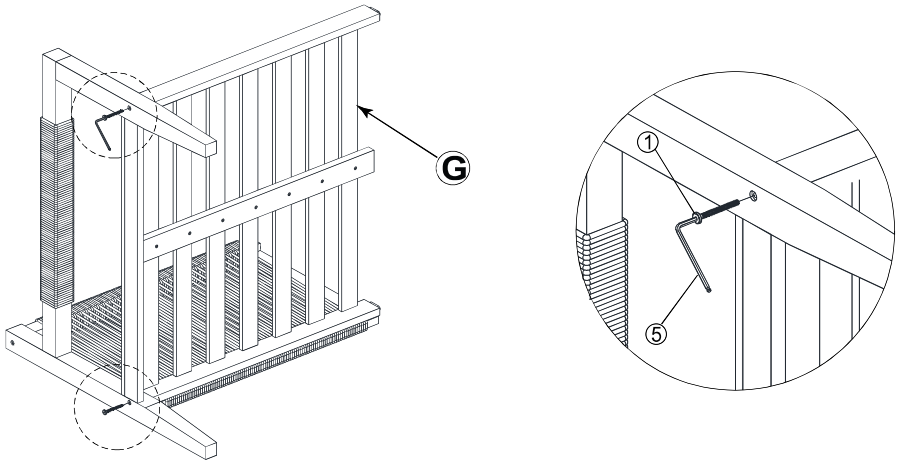

X2

ASSEMBLY INSTRUCTION

STEP 21

B x 1
① x 3

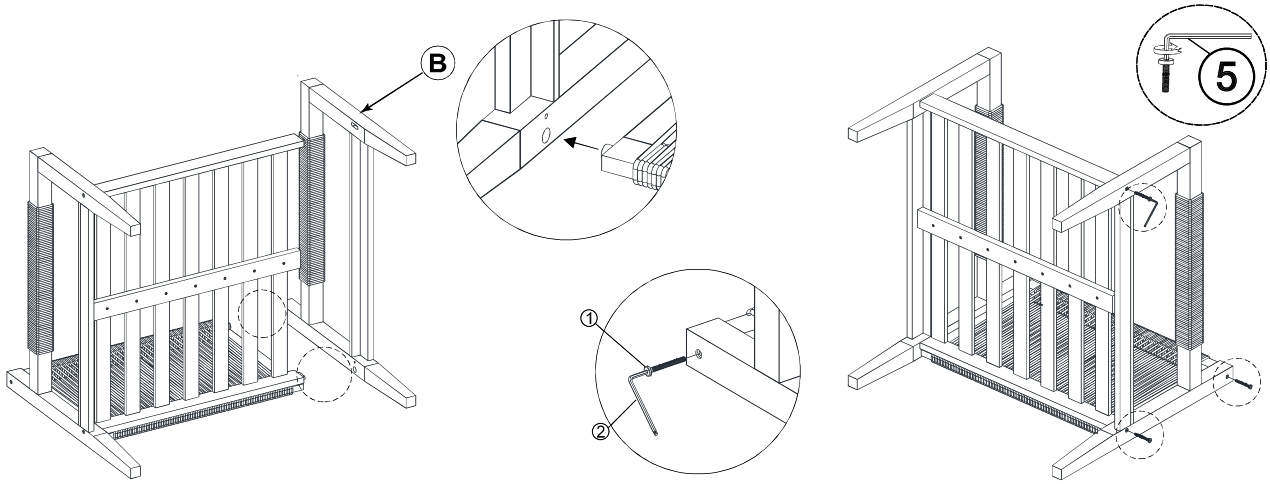

X2

STEP 22

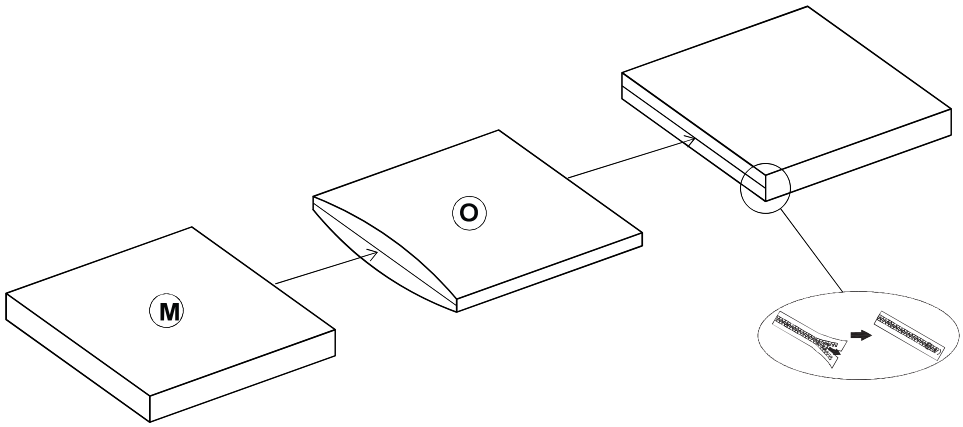

X2

ASSEMBLY INSTRUCTION

STEP 23

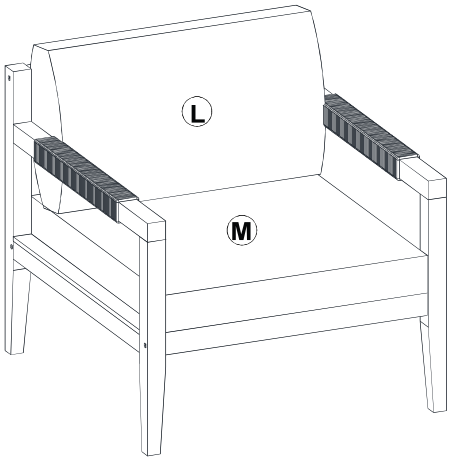

100%



X2

STEP 24

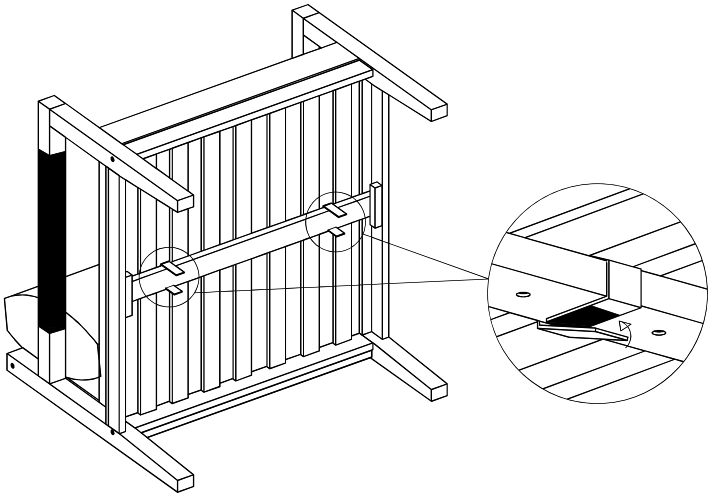

X2

