Installation & Assembly

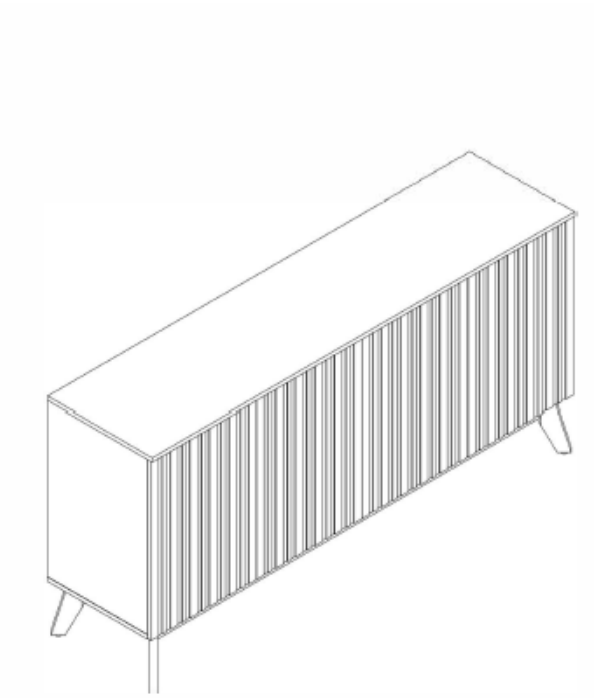

WARRANTY

We strive to offer high quality product and we also try our best to satisfy each customer that order from us, no matter on products or services as needed. Each customer receives a record of their order, such as the order number or item receipt. For any items that are out of warranty period, you may still be able to purchase the replacement parts from our company if they are available.

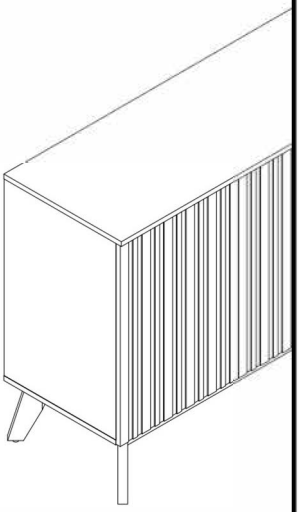

MAINTENANCE AND WARNING

Please read the manual thoroughly before you start installing.

Avoid direct sun light and high humidity.

Packaging and small parts may have chocking hazard, please keep them away from children and pets.

Please clean the product according to each clean code, check the product description for more information.

This product is designed for indoor residential use only.

Avoid placing hot, wet, or heavy objects directly on the surface.

DO NOT overload the shelves.

Keep the doors and drawers closed when not in use to maintain balance.

If moving the product, empty all shelves and drawers first.

Disassemble large furniture before relocation to avoid structural stress.









PRODUCT DESCRIPTION

Modern minimalist solid wood four-door storage cabinet. Features a clean, square silhouette with crisp lines. The four symmetrical doors of equal width offer a minimal look, while the fine vertical fluting on the doors adds rich visual depth and tactile interest. The overall style is special, warm, and contemporary.

All solid wood construction. The cabinet body, doors, and substantial plinth are crafted from natural solid wood, with clear grain and a robust feel. This ensures exceptional stability, load-bearing capacity, and eco-friendly healthiness for long-lasting use.

Integrated cabinet body with solid wood legs. The cabinet features a sturdy, integrated structure, complemented by solid wood legs at the bottom.

High-capacity compartmentalized storage system. Behind the four doors lies well-defined, ample storage space for categorizing and storing books, documents, daily items, or media equipment. It is a core organizational solution for achieving tidiness in living rooms, studies, or bedrooms. Preserved wire holes are very convenient.

Concealed Design: The door panels feature an integrated push-to-open mechanism, with no exposed handles on the exterior, preserving the absolute simplicity and integrity of the cabinet surface.

EXPLODED VIEW

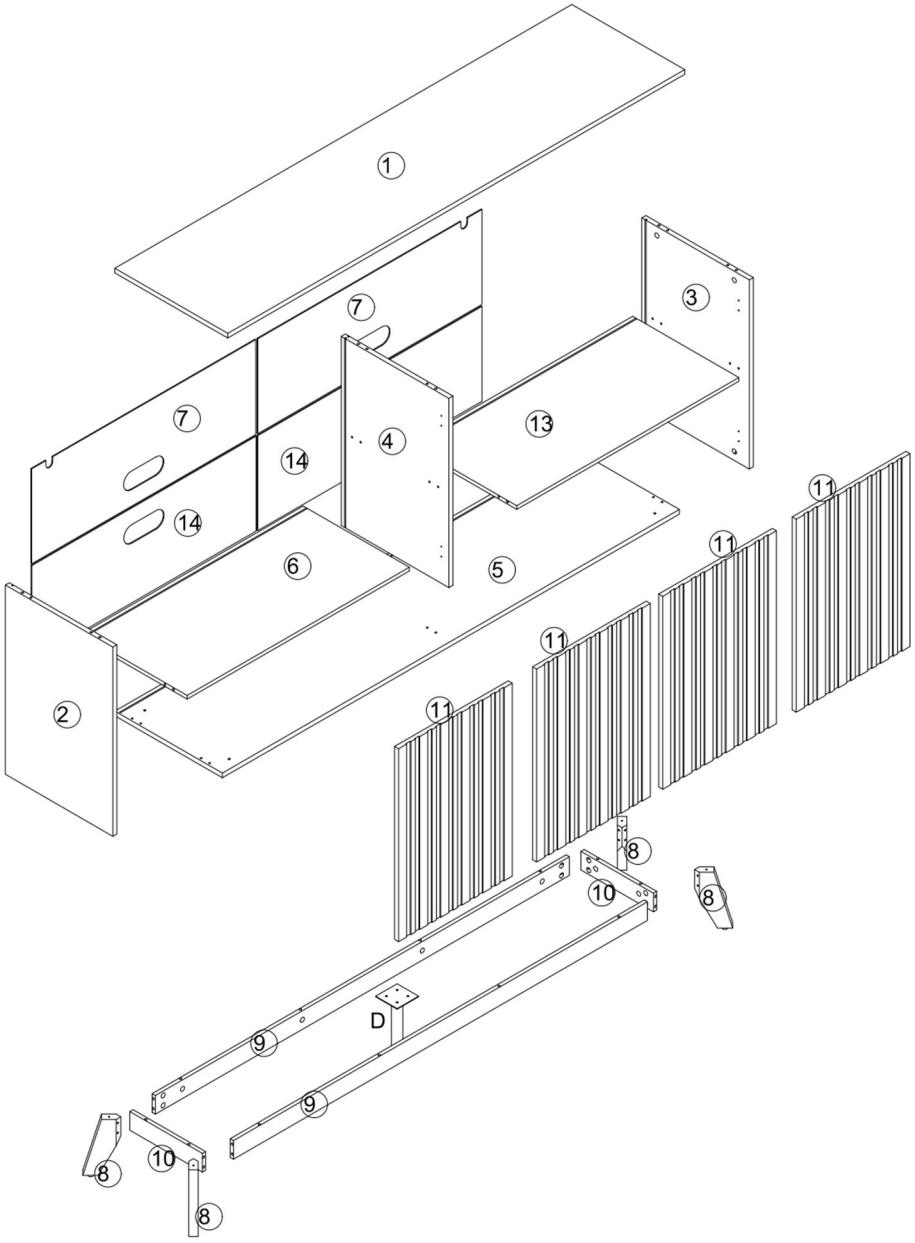

PARTS

 Top panel	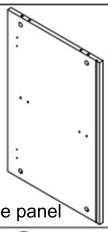 Left side panel	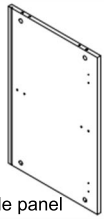 Right side panel	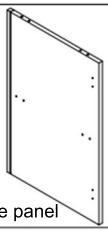 Middle panel
①x1	②x1	③x1	④x1
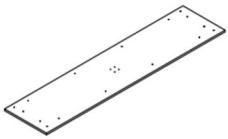 Bottom panel	 Middle panel	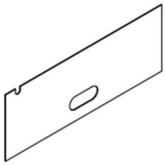 Rear panel	 Legs
⑤x1	⑥x1	⑦x2	⑧x4
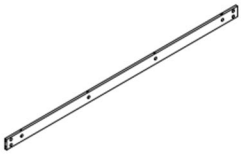 Foot attachment strips	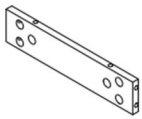 Foot attachment strips	 Door	 Shelves
⑨x2	⑩ x2	⑪ x4	⑬ x1
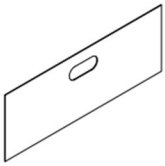 Rear panel			
⑭ x2			

HARDWARE

TOOL LIST

NOTE: Designated with (★) We provide additional spare parts in the hardware package

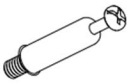 Cam bolt Ø6 X 35mm	 Cam lock Ø15 X 9.5mm	 Wooden dowel Ø6 X 30mm	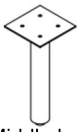 Middle leg
A x48+1	B x48+1	C x20+1	D x1
 Screws M3.5 x 12 mm	 Screws M3 x 16 mm	 Back plate buckle	 Screwdriver
E x56+1	F x24	G x24	H x1
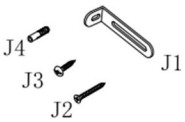 Anti-fall hardware	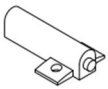 Magnetic	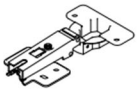 Hinge	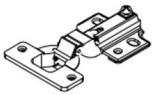 Hinge
J x2	K x4	L x4	M x4
 Screws Ø5 X40mm	 Screws		
P x 4	Q x4		

Please make sure all hardware&packing material fitting the list. Especially some small accessories may be missing during transportation. Please contact us if you have any question.

PRE-ASSEMBLY PRECAUTIONS

Assemble on a flat and clean surface to protect the product and the floor.

DO NOT modify or drill extra holes in the panels. It may affect stability and void the warranty.

Keep all small parts away from children.
Two or more adults are strongly recommend for assembly to ensure alignment and safety.

Avoid using power tools on wooden parts, which might damage the product.

Always lift panels vertically to avoid chipping edges.
DO NOT drag or slide the surface across the floor.

Check All Parts Before AssemblyUnpack all boxes and check parts with the parts list. Use the labeled stickers to match parts correctly.

DO NOT discard any packaging until assembly is complete.Contact customer service if any parts are missing or damaged.

step 1 ---Install the Side panel (2&3)

Insert Cam Bolts (A) into the pre-drilled holes of the Left side panel (2), Right side panel (3). Make sure each bolt is fully screwed in for proper locking later.

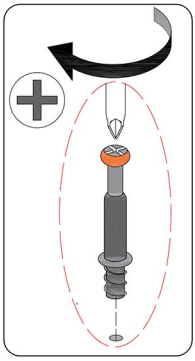

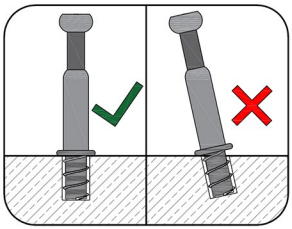

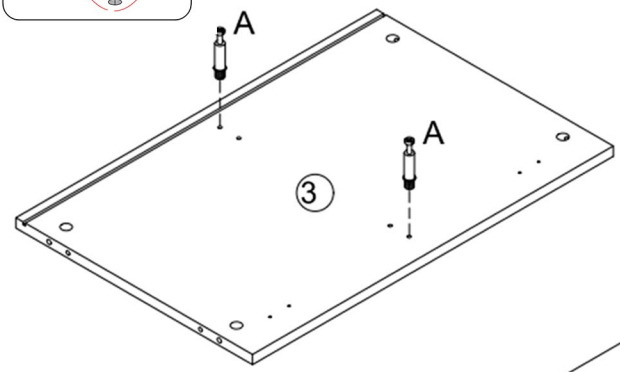

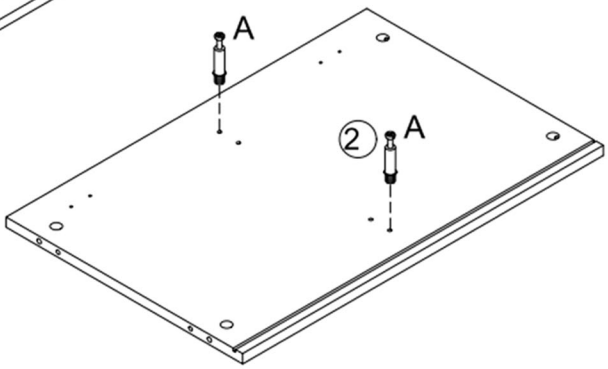



step 2 ---Install the Top panel (1)

Install Magnets (K) and Wall Anchor Plates (J1) onto the back side of the Top Panel (1). Secure with Screws (E&J3). Ensure proper orientation for smooth door closing.

Insert Cam Bolts (A) into the pre-drilled holes of the Top Panel (1).

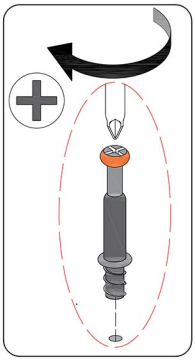

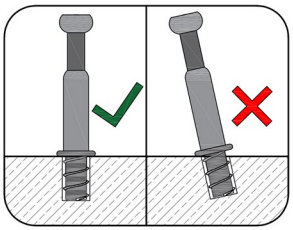

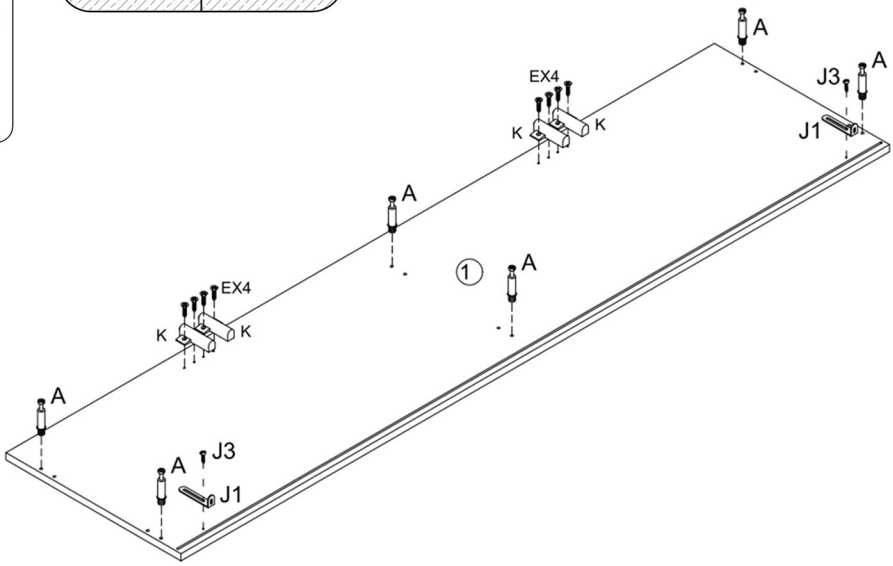

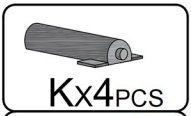









step 3 ---Install the Cam Bolts (A)

Insert Cam Bolts (A) into the pre-drilled holes of the Bottom Panel (5). Make sure each bolt is fully screwed in for proper locking later.

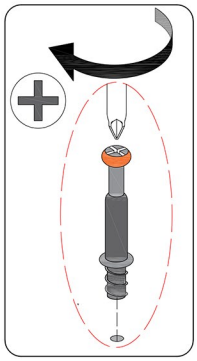

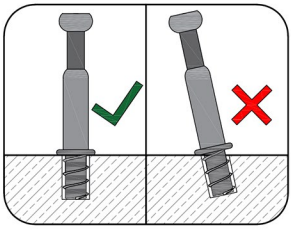



step 4 ---Install the Cam Bolts (A)

Insert Cam Bolts (A) into the pre-drilled holes of the Legs(8).
Make sure each bolt is fully screwed in for proper locking later.

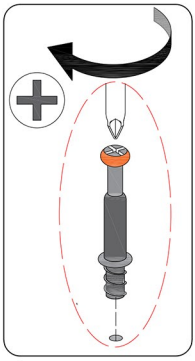

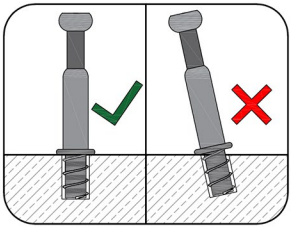

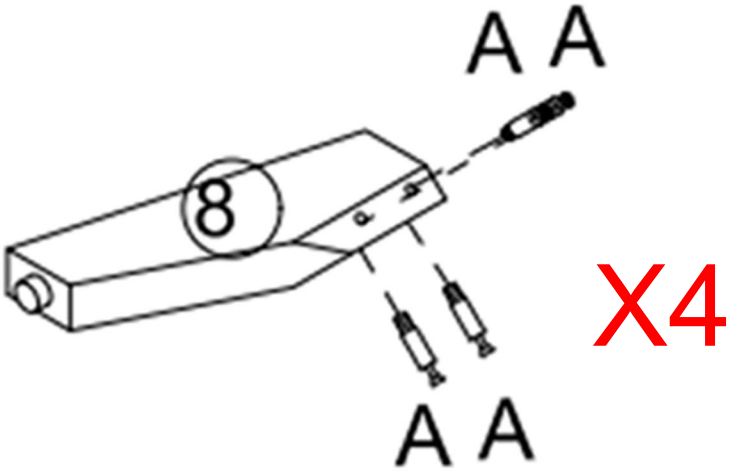



step 5 ---Install the legs

Insert foot attachment strips (9&10) into the pre-assemble legs as shown.
Insert Cam Locks (B) into the pre-drilled holes on the inner sides of Foot Attachment strips(9&10).
Align them with the other side of the Cam Bolts (A) on legs (8) and turn the Cam Locks clockwise to lock them tightly.

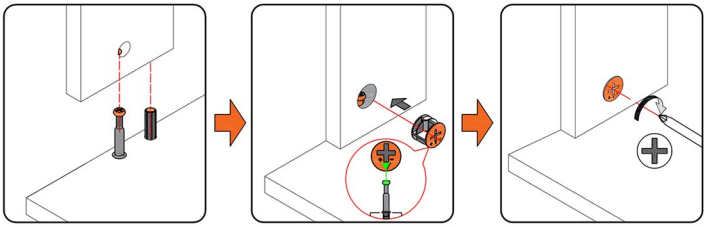

Three-in-One Connector Installation Diagram

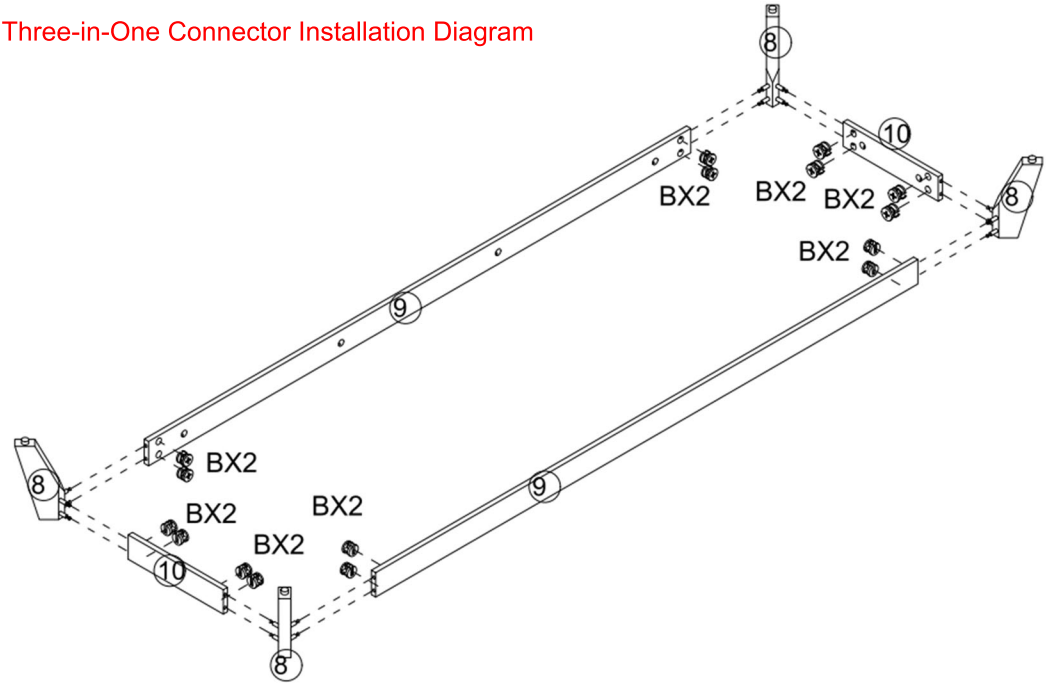



step 6 ---Install the legs

Insert pre-assemble part (on step 5) into the pre-assemble bottom panel (5),make sure all holes aligned.
Then,Insert Cam Locks (B) into the pre-drilled holes on the inner sides of Foot Attachment strips(9&10).
Align them with the other side of the Cam Bolts (A) on legs (8) and turn the Cam Locks clockwise to lock them tightly.
Use screws (Q) to attach the middle legs (D) to Bottom panel(5), Tighten it with screwsdrives.

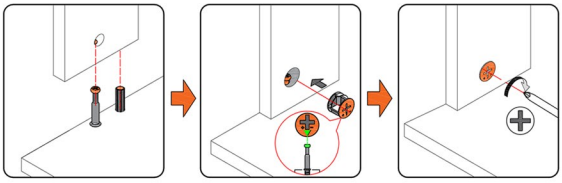

Three-in-One Connector Installation Diagram

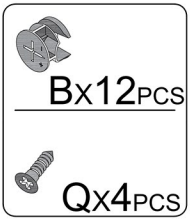

step 7 ---Locking Legs

Use screws (P) to attach the legs (D) to Bottom panel(5),
Tighten it with screwsdrives.

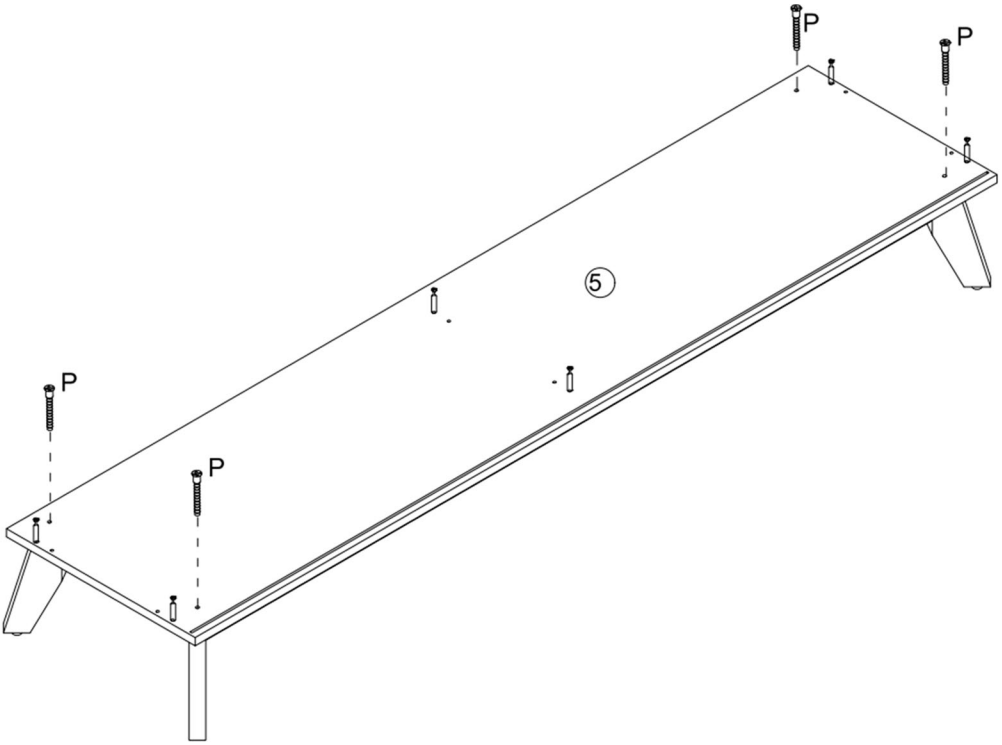



step 8 ---Install the Hinge (L&M)

Place the Doors (11) and Middle panel (4) on a clean surface, then locate the two pre-drilled holes for hinges on the back of each door. Align Hinge (L&M) with the holes and tighten with screws (E).

Insert Cam Bolts (A) into the pre-drilled holes of the 4 Middle Panel (4) as shown.

Make sure each bolt is fully screwed in for proper locking later.

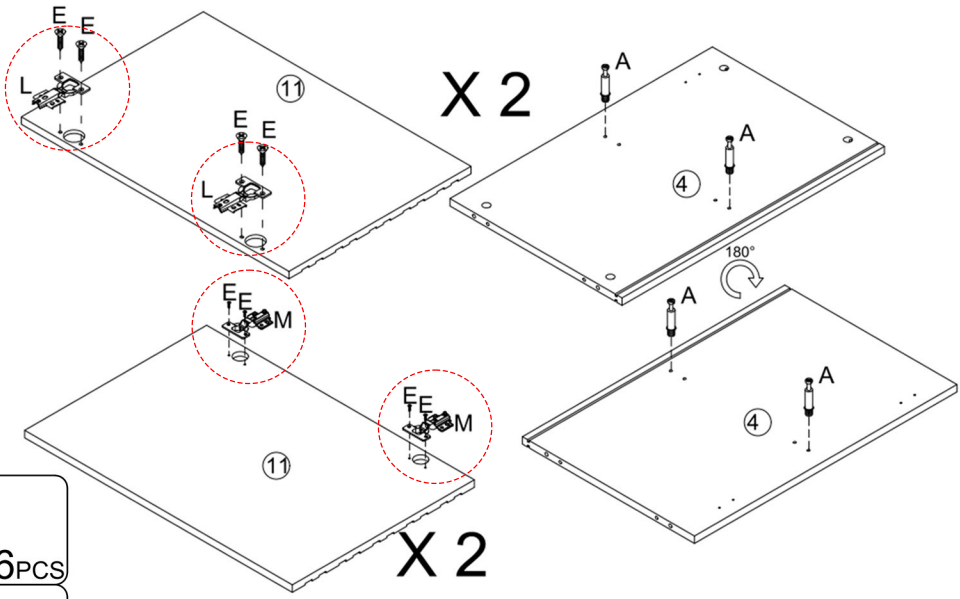

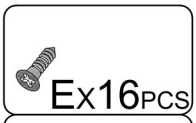



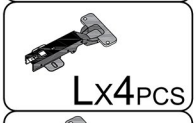

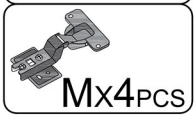

step 9 ---Install the panel (13&4&6)

Insert Wood Dowels (C) into both ends of the Middle panel (4), and place Cam Locks (B) in the pre-drilled holes. Align each lock with the corresponding Cam Bolts (A) on Panels (6 & 13), then rotate to secure the connection.

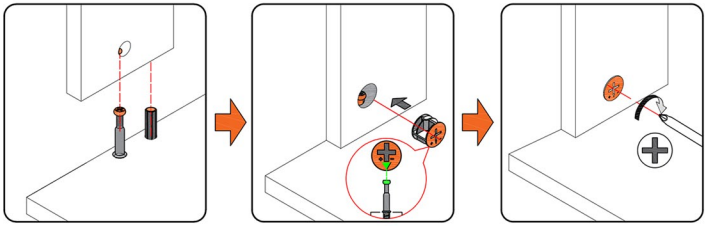

Three-in-One Connector Installation Diagram

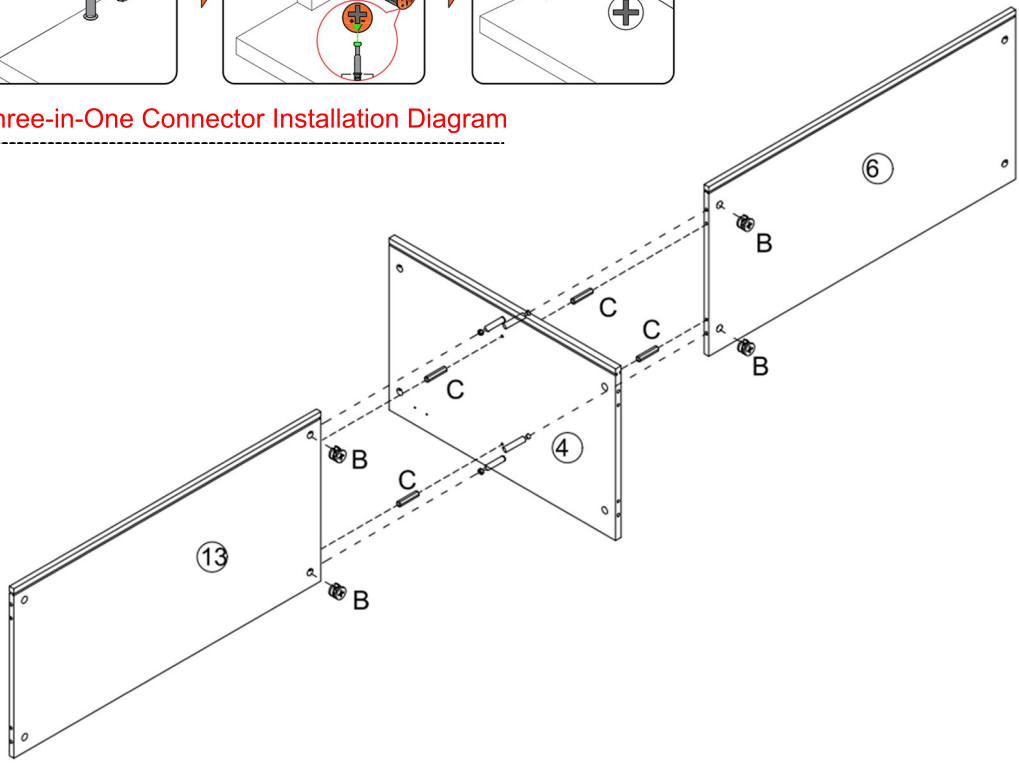

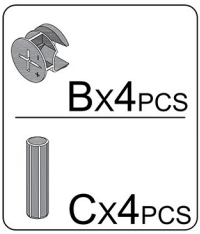

step 10 ---Install the Side panel (2&3)

Repeat the previous step with the side panels (2&3): insert Dowels (C), fit Cam Locks (B), align with Cam Bolts (A) on Panels (13 & 6), and tighten to secure.

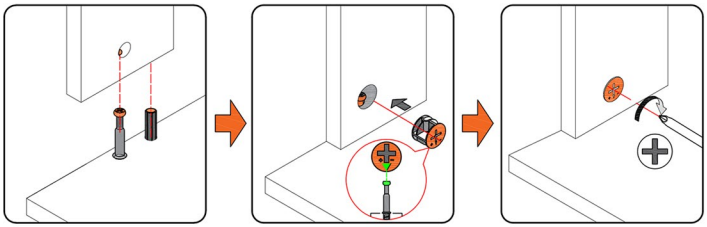

Three-in-One Connector Installation Diagram

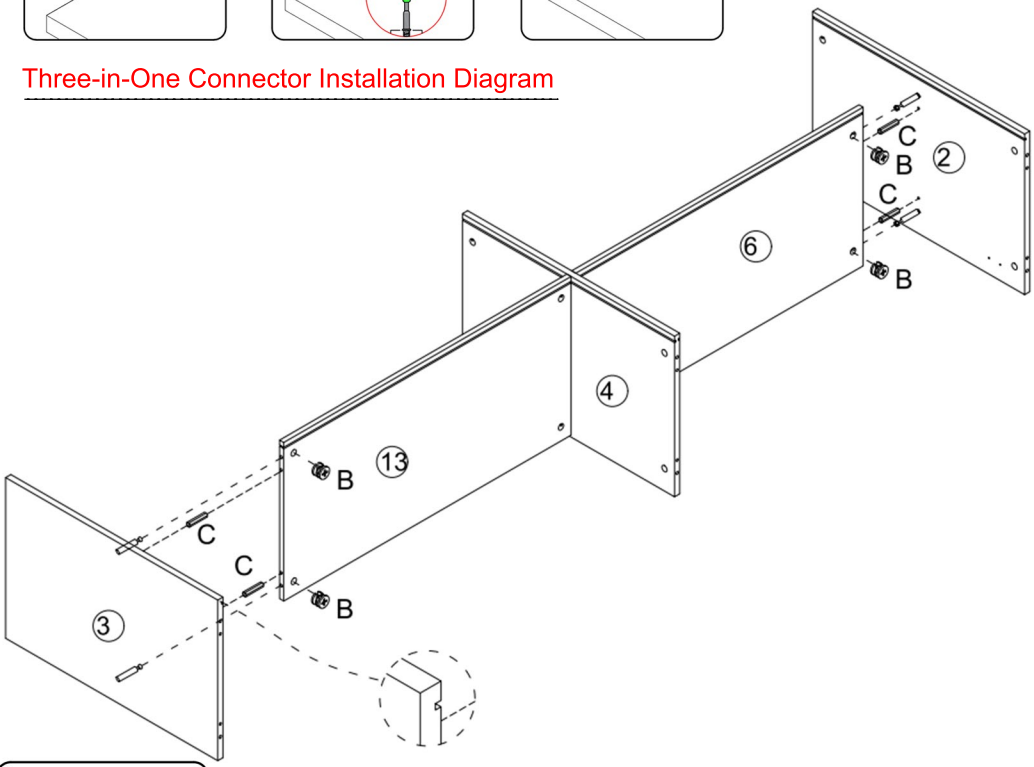

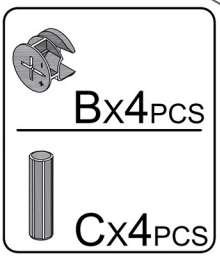

step 11---Install the Rear panel (7&14)

Carefully stand the assembled cabinet frame upright. Slide the Rear Panel (7&14) into the grooves along the back. Ensure it fits flush and aligns tightly with the internal channels.

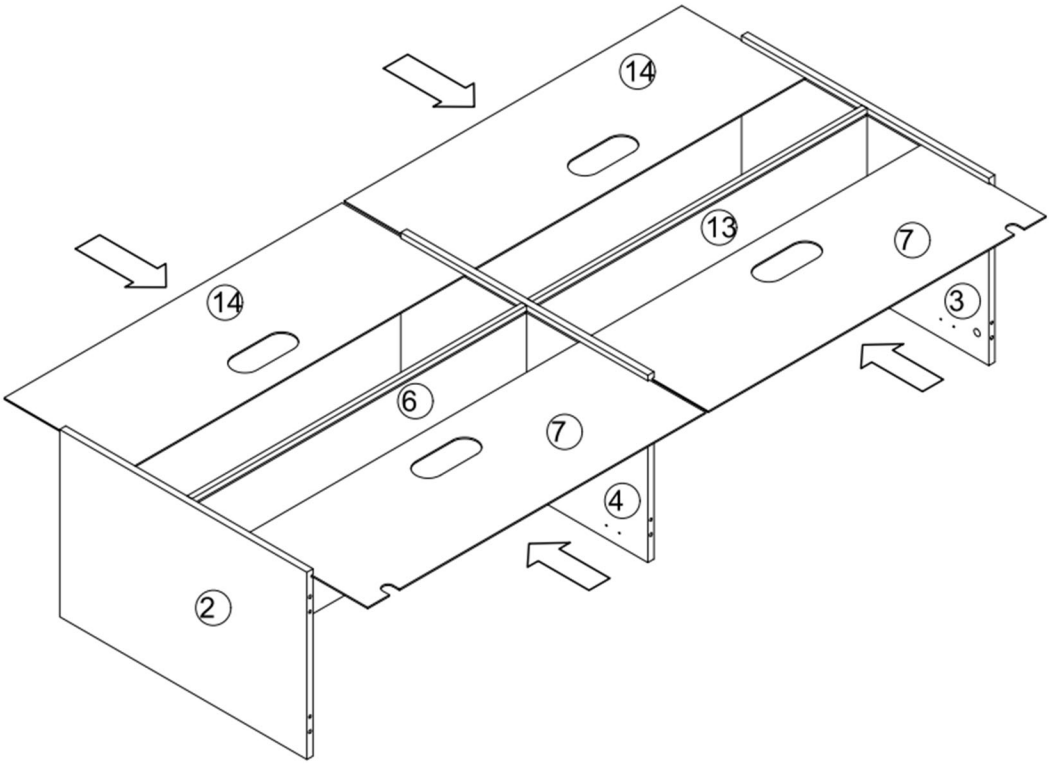

step 12 ---Install the Top panel (1)

Insert Wood Dowels (C) into the pre-drilled holes on Panels (2, 4 and 3) as shown.

Place Cam Locks (B) into the designated holes of Panels (2, 3, and 4). Align with the Cam Bolts (A) inserted on Top Panel (1) earlier, and turn the Cam Locks with Screwdriver provided

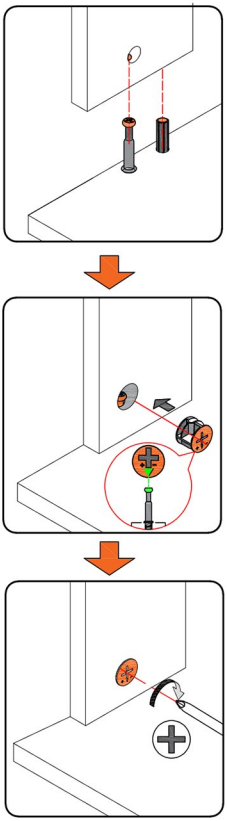

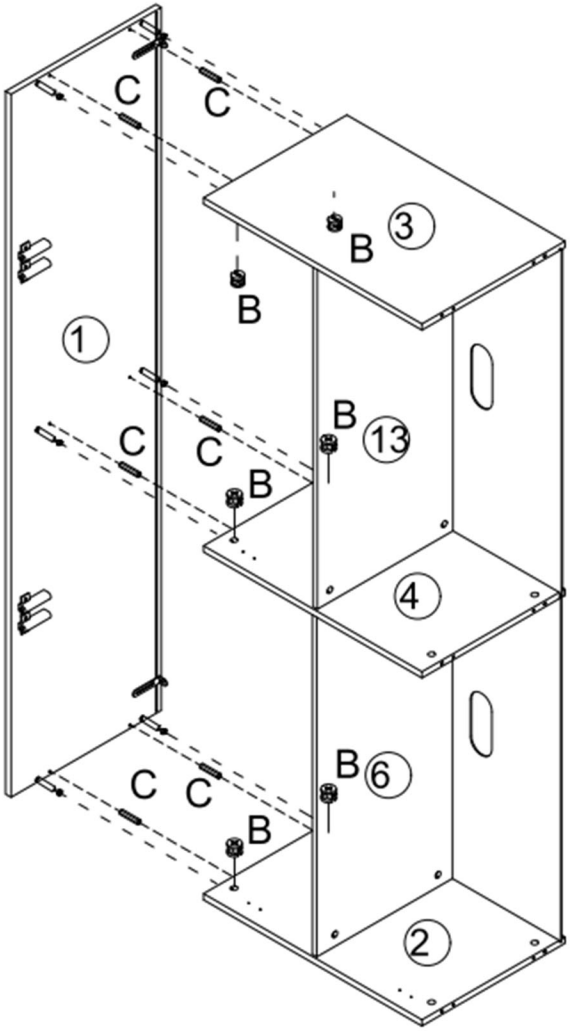

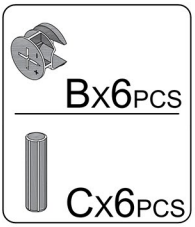

step 13 ---Install the Pre-assemble bottom panel (5)

Insert Wood Dowels (C) into the pre-drilled holes on Panels (2, 4 and 3) as shown.

Place Pre-assemble Bottom Panel (5) onto the cabinet frame. Make sure the holes on the panel align precisely with the pre-drilled holes on the side and center panels.

Place Cam Locks (B) into the designated holes of Panels (2, 3, and 4). Align with the Cam Bolts (A) inserted on Top Panel (1) earlier, and turn the Cam Locks with Screwdriver provided clockwise until they locked in place.

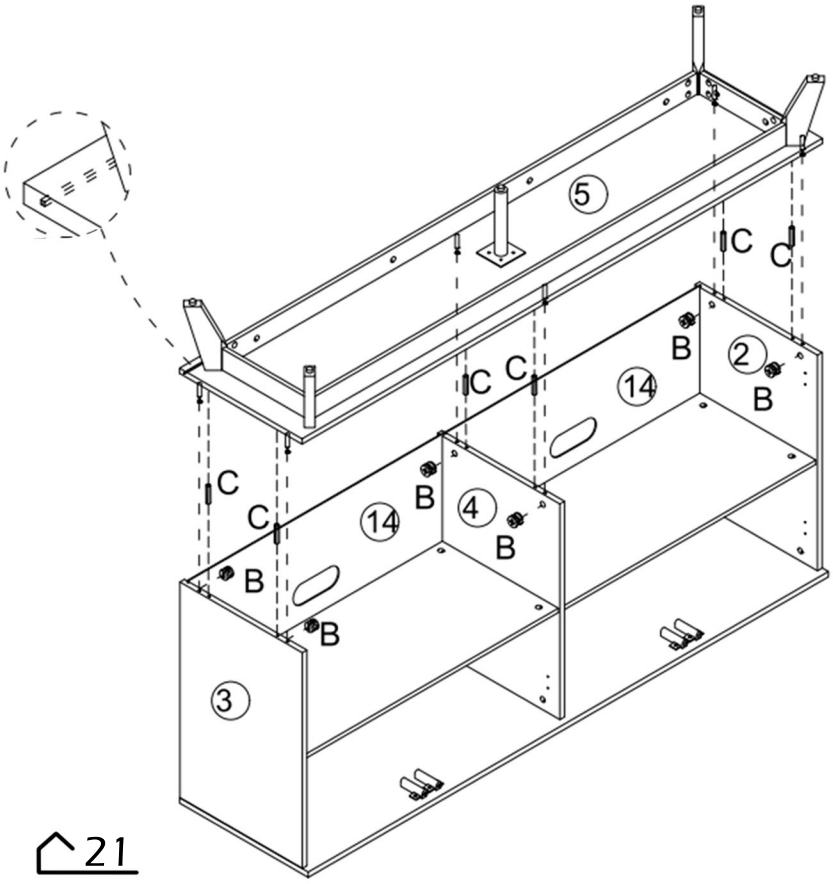

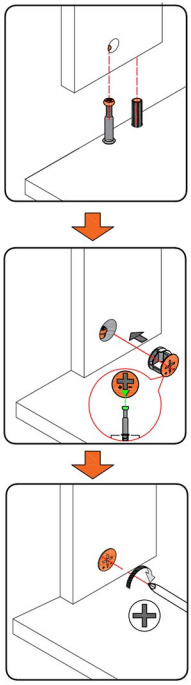

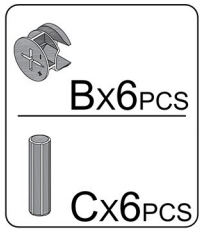

step 14 ---Install the Back plate buckle (G)

Adjust the gaps between the panels as shown. Find pre-drilled holes at the back corners and insert Back Plate Buckles (G), then secure the buckles using screws (F).

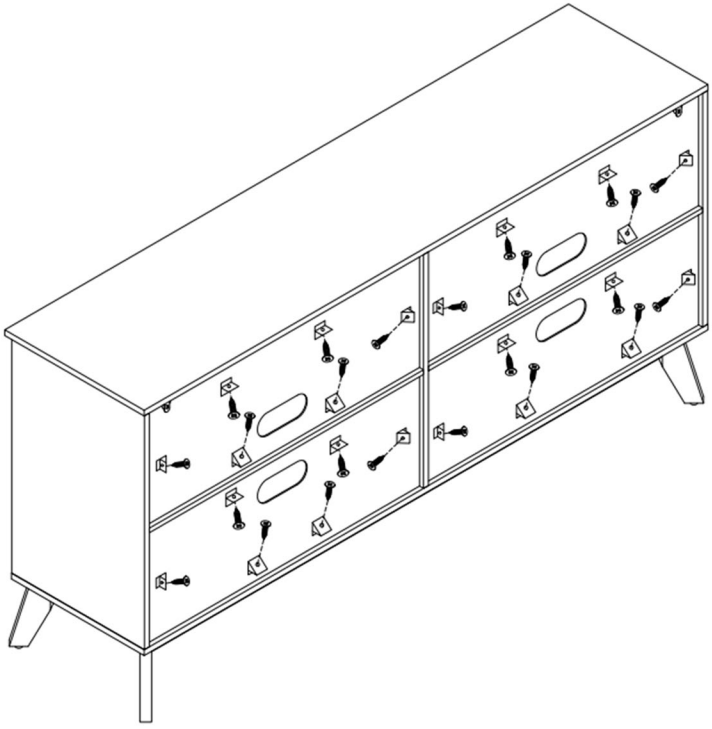

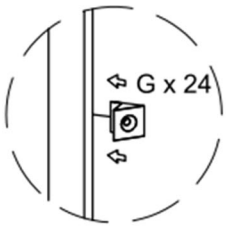



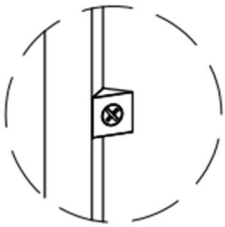





step 15 ---Install the Doors(11)

Locate the hinge holes on the Panels (2 ,4& 3) to install Door (11), secure the top and bottom hinge with screw (E).

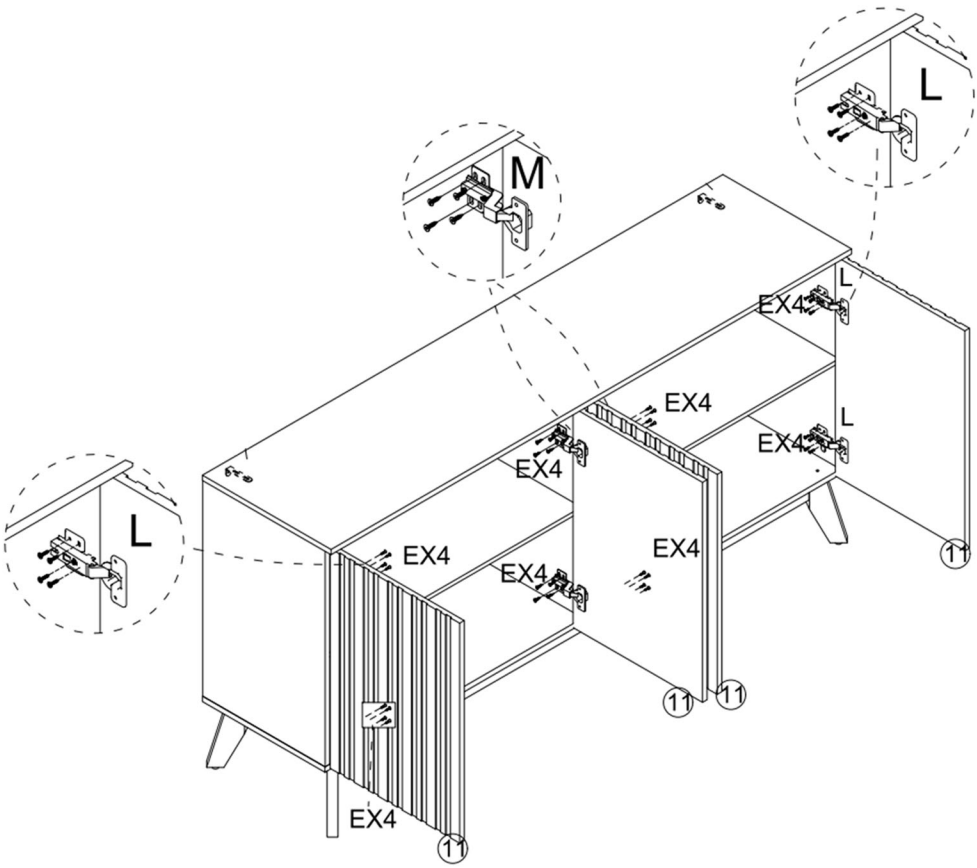

EX32PCS

step 16

The ways to adjust the door

- Before adjusting the hinge, please check whether the cabinet is skewed.
- If the skew can not be repaired, please remove the anti-tipping device first, then adjust the cabinet to vertical position.
- Please adjust the hinge with the door open.
- Please operate it with more than 2 people, one person holds the door and the other one adjusts the screw.

Components Name

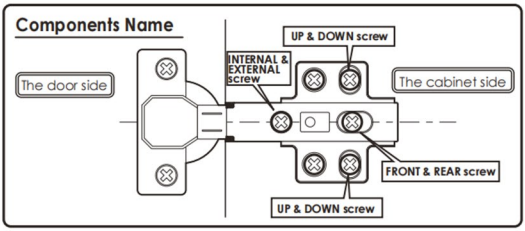

Obvious gaps between doors or Doors don't look closed



1 Turn "internal & external screw" to the right can make the door approach inside. Please adjust the doors little by little.

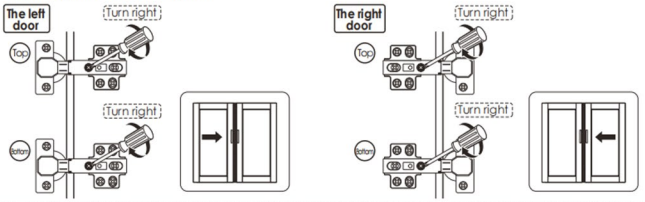

※ If the 2 doors are overlap, please turn the "internal & external screw" to the left.

When door is crooked



Please take the following steps to adjust first.

1 Rotate the "front and rear screws" to the left

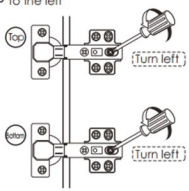

※ After adjusting the "front and rear screw", the door still does not change, please turn the "internal & external screw" to the right Slightly.

2 Push the door to the cabinet

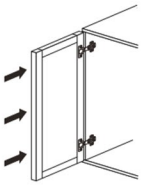

3 Rotate the "front and rear screws" to the right

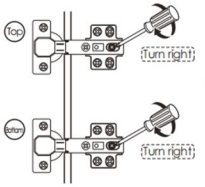

When door is leaning

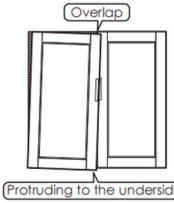

1 Turn "internal & external screw" to the left can make the top of the door tilted outward.

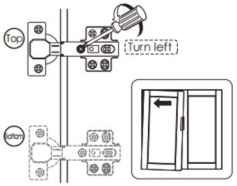



1 Turn "internal & external screw" to the left can make the bottom of the door tilted outward.

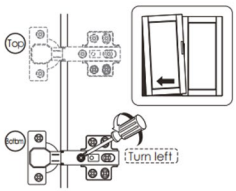

When the door is higher on top



1 Turn "up & down screw" to the left

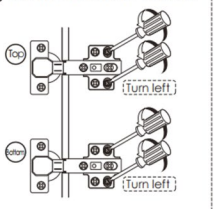

2 Lower the door's height so that 2 doors are of the same height.



3 Turn "up & down screw" to the right

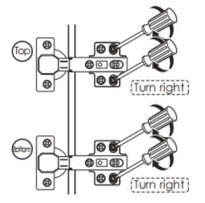

※ If the door is lower on bottom, please lift up the left door slightly on step 2

step 17 ---Install the Anti-fall hardware

In order to fix the cabinet to the wall.
First move the cabinet against the wall, then hold the Iron Plates (J1) near the back-top edge of the cabinet to determine position, and mark the positions on the wall with a pencil.
Use a drill or powertool to make holes at the marked spots (For at least 30 mm depth).
Hammer the Wall Plugs (J4) into the drilled holes until flush.
Insert the screw (J2) through Iron Plate (J1) and tighten into the Wall Plugs (J4).

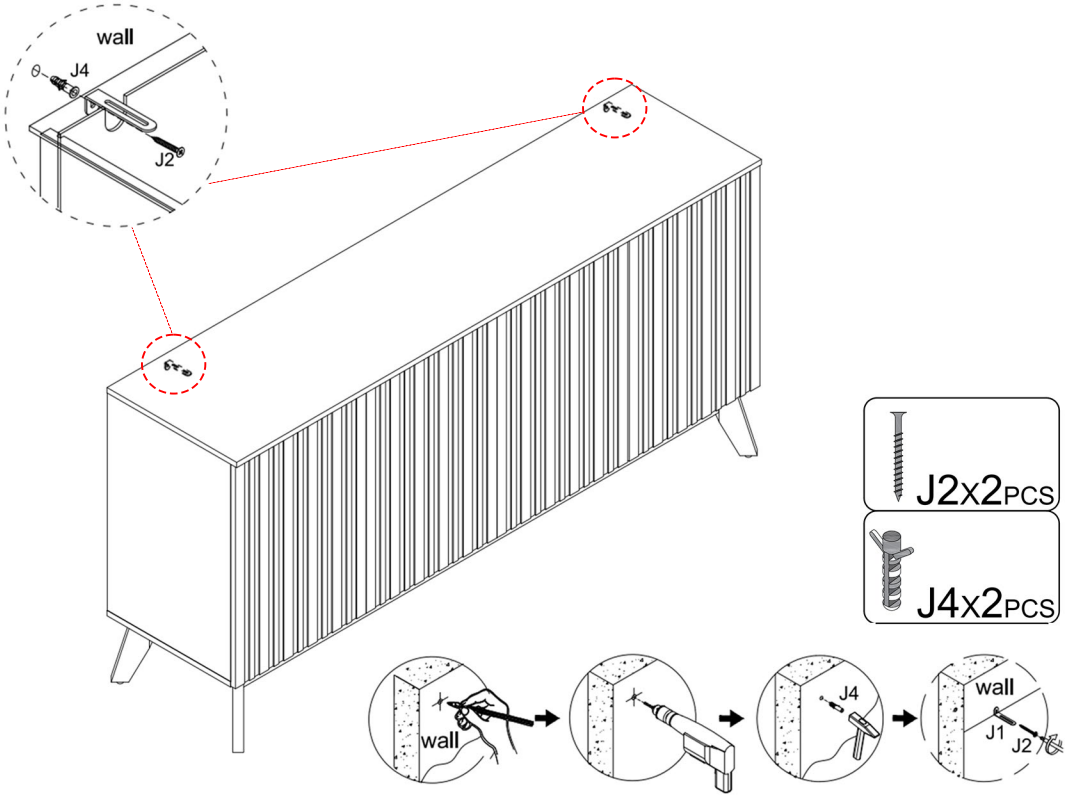

step 18 ---Assemble Complete

Congratulations! You have finished the assembly, thank you again for choosing our product! Please enjoy!

